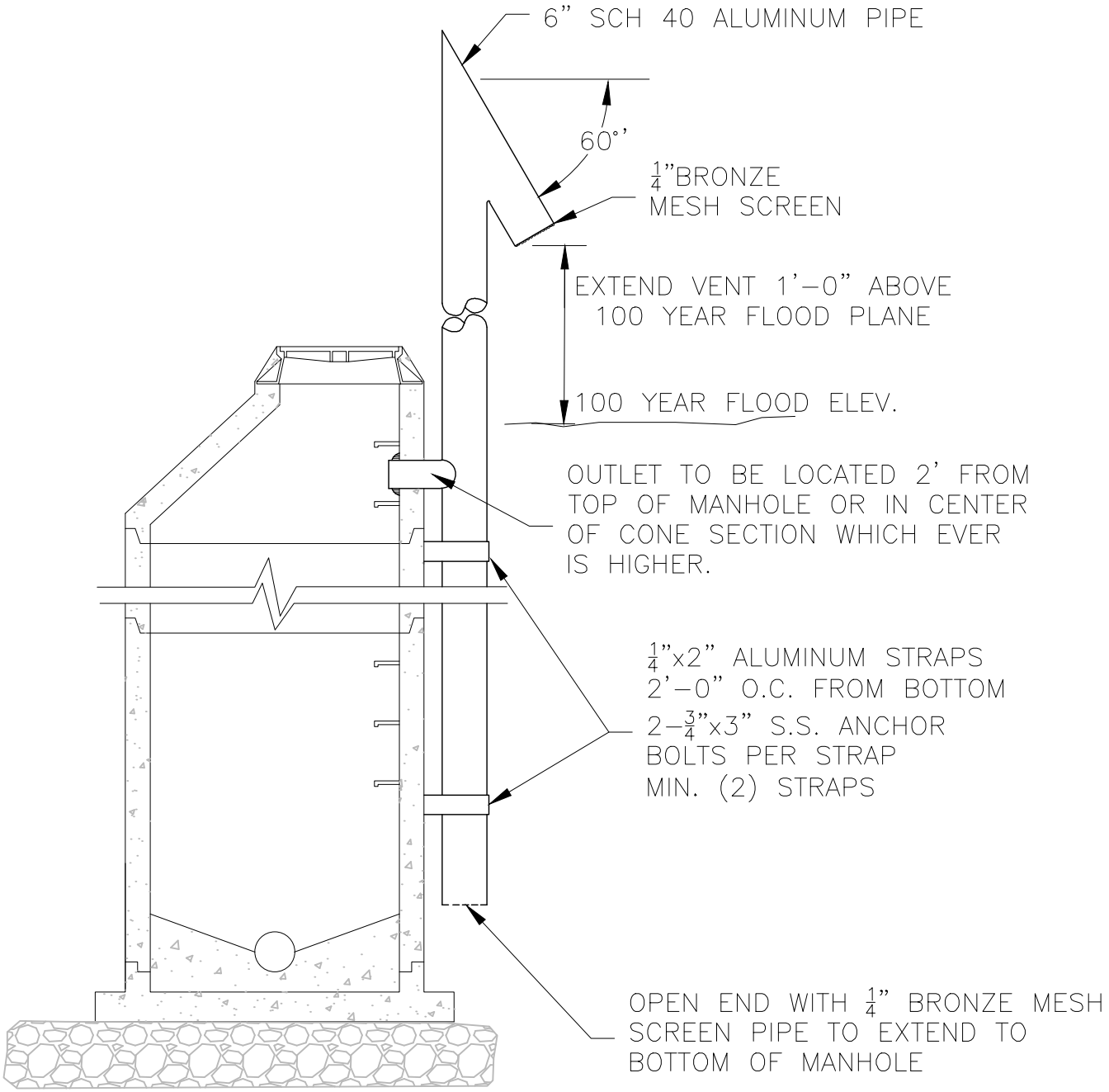

	STANDARD DETAIL	CITY OF WILMINGTON NORTH CAROLINA
DATE: 2001	STANDARD MAN-HOLE VENTED SECTION	CITY OF WILMINGTON ENGINEERING PO BOX 1810 WILMINGTON, NC 28402 (910) 341-7807
DRAWN BY JSR/CMR		
CHECKED BY B.P., P.E.		
SCALE NOT TO SCALE		SD 14-03