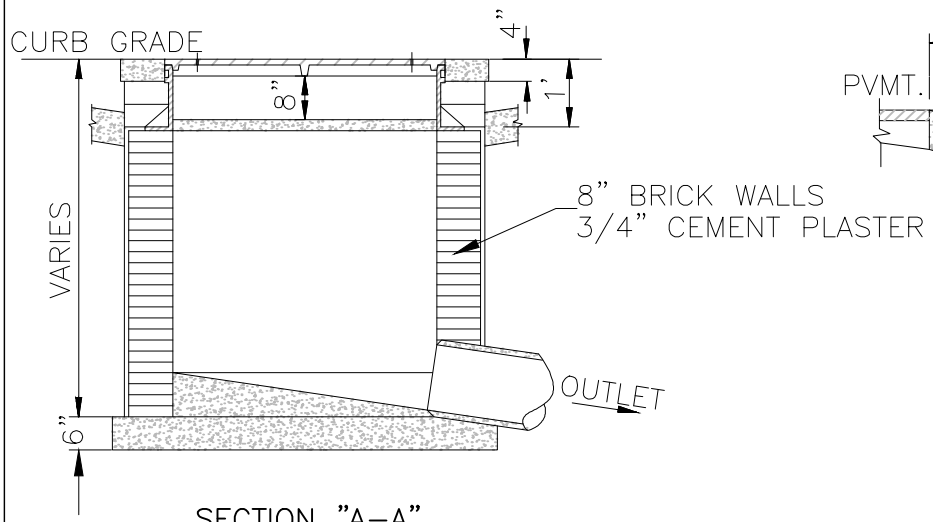


SECTION "A–A"

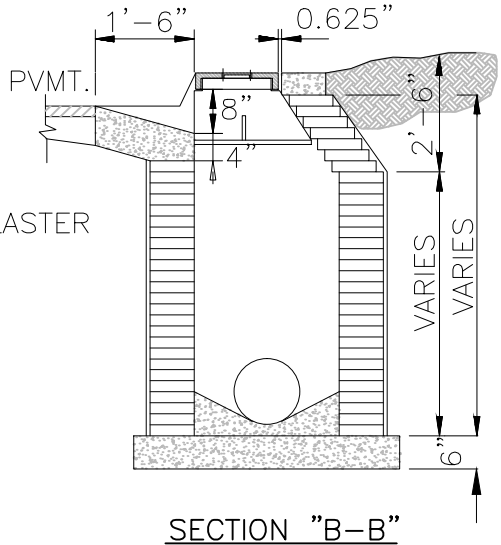


SECTION "B–B"

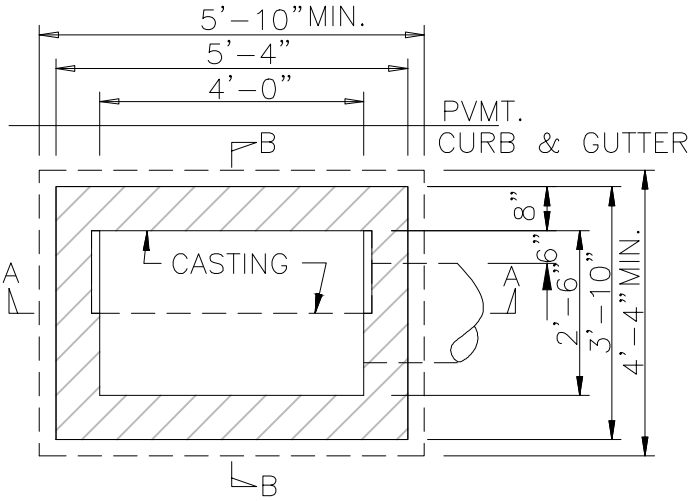


PLAN

NOTE:

1. 4" DEEP X 8" WIDE CONCRETE COPING ALL AROUND BASIN CASTING.
2. ALL CONCRETE TO BE CLASS "A"
3. FOR CASTING DETAIL SEE SD 2–16

| | | |
|---|---|---|
| | STANDARD DETAIL | CITY OF WILMINGTON NORTH CAROLINA |
| DATE: 2006 | CATCH BASIN | CITY OF WILMINGTON ENGINEERING<br>PO BOX 1810<br>WILMINGTON, NC 28402<br>(910) 341–7807 |
| DRAWN BY JSR/CMR | | |
| CHECKED BY B.P., P.E. | | |
| SCALE NOT TO SCALE | | SD 2-01 |