Kimley-Horn
and Associates, Inc.

P.O. Box 33068
Raleigh, North Carolina 27636-3068
Tel 919-677-2000 Fax 919-653-5847

DRAFT TECHNICAL MEMORANDUM #2

To:	Mr. Frank Styers CIP Director City of Wilmington 305 Chestnut, Street Wilmington, NC 28401	**Copies:**	Tom Ames, III, TWB Hugh Caldwell, City Dan Check, City Gary McSmith, NHC Greg Thompson, NHC Ken Vogt, City Michael Vukelich, TWB
Date:	June 23, 2006	**KHA Proj. No.:**	011335022
From:	Kevin F. Carter, P.E. J. Chris Ford, P.E. Jeremy A. Rivenbark, P.E.		
Subject:	Technical Memorandum # 2 – Operational Evaluation Northeast Interceptor Evaluation		

1 Background

As part of the study to evaluate the capacity, condition, and reliability of the Northeast Interceptor (NEI) System, an operational evaluation has been performed to assess the operational procedures of the system. Operational procedures are integral to providing capacity for future demands, operational flexibility, and a high level of reliability, by providing a system that operates efficiently, reliably, and at maximum design conditions. As such, study recommendations, that will be made to improve the capacity, condition, and reliability of the system, must incorporate operational conditions and procedures. Technical Memorandum #2 will provide operational recommendations to be considered and incorporated in the overall project recommendations.

Odor and corrosion control, pump station monitoring and control, and easement management have been identified by the NEI stakeholders as critical operational components to be evaluated. Odor and corrosion control will be addressed through an evaluation of the following:

- Odor Corrosion Control Program (OCCP)
- Areas with hydraulically induced corrosion
- Force main discharge options at City of Wilmington Pump Station 35 (Bradley Creek)
- Air release valve operation and maintenance program

Monitoring and control issues will be assessed through an evaluation of daily pump station data collection and SCADA pump station monitoring and control. Easement management will be addressed by a review of current practices and development of an Easement Management Plan.

2 Current Odor Corrosion Control Program (OCCP) Evaluation

Many odorous compounds exist in wastewater; however, gaseous hydrogen sulfide (H_2S) is the most prevalent. Not only is the compound very objectionable as an airborne compound, but it can also be readily oxidized to form sulfuric acid (H_2SO_4) in a humid environment such as a pump station wet-well, headspace in a gravity sewer, or at "high spots" and "transition areas" of a force main. Odors and corrosion can be minimized and almost completely prevented by chemically or biologically inhibiting the production of hydrogen sulfide, which in-turn will reduce or eliminate the generation of sulfuric acid under the correct conditions. An environment can be created that provides for a condition that is less conducive to the generation of H_2S or the release of the associated odor. However, it is not practical or cost effective to create this environment with the addition of chemicals only and therefore a vapor phase treatment coupled with the liquid phase treatment is most commonly implemented in the control of corrosion and odor.

2.1 Corrosion and Odor Control within the NEI

Hydrogen sulfide can be very destructive within a pump station wet-well and a force main once it is generated. The NEI project possesses a very high potential for both odor and corrosion control problems along major segments of the approximately 32,500 linear feet of 24" force main and16,500 feet of 20-inch force main and at the wet-wells of pumping stations 34 (COW PS 34) and 35 (COW PS 35).

In relation to the NEI force main, there are two main areas of concern regarding hydrogen sulfide generation:

- Corrosion of the pipe and any other metal components of the force main system in the vicinity of air release valves and transition areas due to hydrogen sulfide being oxidized into sulfuric acid and;
- Odor in the vicinity of air release valves and at the force main discharge locations due to the release of hydrogen sulfide gases from the liquid phase.

In relation to COW PS 34 and COW PS 35, there are also two main areas of concern regarding hydrogen sulfide generation:

- Corrosion of the concrete in the vicinity of the influent junctions boxes and manholes and corrosion of the interior concrete and metals of the influent channel and wet-well due to the turbulence created at these locations and the associated release of hydrogen sulfide which is being oxidized into sulfuric acid (H_2SO_4) and;
- Odor in the vicinity of the junction boxes and manholes and the wet-well due to the release of hydrogen sulfide gases from the liquid phase as it discharges from the force main.

The NEI force main, with its significant length, large size, and long detention times, poses the potential for the generation of hydrogen sulfide. It is reasonable to expect that the generation of high concentrations of hydrogen sulfide was most prevalent in the very early stages of operation when flows from both COW PS 34 and COW PS 35 were at their lowest and detention times the longest. It is also reasonable to conclude that a major force main like the NEI, constructed primarily with a

standard AWWA C104 cement mortar lining, would degrade rapidly in susceptible areas as indicated above during these initial years of operation. As the force main then became more active, the potential development of the hydrogen sulfide would be reduced and rate of degradation would decrease. However, there is also significant and very recent evidence that ductile iron pipe, lined with a coal tar epoxy lining (a lining material often specified in the mid-1980's) as portions of the NEI were, is also incurring problems with the lining degrading and failing, resulting in pipeline corrosion and degradation. The City of Raleigh is currently engaged in a similar evaluation of the Brier Creek force main and it is our understanding that the results of their field testing indicate such lining failures. Due to the initial corrosion which began in the early stages of operation in the pipe lining, it is anticipated that the lining deterioration would continue, despite the reduction of the H_2S gas present. It is not anticipated that the deterioration would be linear.

In addition to causing corrosion in the force main, hydrogen sulfide generation can also lead to odor problems along the force main as well as at the discharge location in manholes or the pump station wet-wells. As gases are built up and released at air release valves and wet-wells, hydrogen sulfide is released into the atmosphere. At concentrations as low as (0.5 ppm), hydrogen sulfide can be detected by the human nose; therefore its volume must be limited to a level below this threshold to prevent odor complaints.

2.2 Review of Odor and Corrosion Control Documents

The following documents were reviewed and used as part of the odor and corrosion control evaluation:

Odor Corrosion Control Program Contract No. S12-0104, dated March 29, 2004. (Appendix A)

THIOGUARD TST Field Trial Report for The City of Wilmington, New Hanover County and The Town of Wrightsville Beach, NC, dated November 4, 2003. (Appendix B)

USFILTER Northeast Interceptor Corrosion Evaluation, dated April 17, 2006. (Appendix D)

Pump Station and force main as-built drawings prepared by Henry Von Olsen & Associates dated February 7, 1976.

One (1) year of OCCP Report data provided by the City of Wilmington (See PER Appendices)

2.3 Methodology

The approach to the OCCP evaluation was initiated with a review of the existing odor corrosion control system. Field reviews were conducted at both pump stations (COW PS 34 and COW PS 35) with City operational staff and US Filter staff present to review the existing equipment and current operational procedures. This was followed by a review of the OCCP documents provided by the City. The OCCP Contract was reviewed to ascertain the scope of the current system, the contractual arrangement with the current OCCP contractor (US Filter) and the "standards of performance" that must be achieved in order to be in contractual compliance. All of FY2005's historical OCCP data was obtained and reviewed to identify significant trends or correlations between the concentrations of H_2S, the consumptions of chemicals, and the operation of the OCCP System. At the City's request,

US Filter provided an evaluation entitled "USFILTER Northeast Interceptor Corrosion Evaluation" dated April 17, 2006. This document was reviewed as well to determine if the information obtained by US Filter correlated with the information obtained in this study.

Based on field reviews, available information, and past experience, evaluation criteria were developed that are particular to the Northeast Interceptor System. This information was presented to the stakeholders for review and comment and then revised accordingly. Several odor and control alternatives were then evaluated based on these criteria to develop a list of viable odor and corrosion control alternatives which were recommended for laboratory testing. Testing procedures were developed for each alternative and the testing proceeded. Based on the results of lab testing, recommendations were provided for full scale pilot testing to verify the results of the lab testing. Recommended thresholds were then developed and compared to the contract standards of performance, leading to recommendations for OCCP system modifications as well as for bid package and contract modifications. The information obtained during this evaluation was then compiled and presented in this technical memorandum.

2.4 Evaluation of the Current OCCP

2.4.1 OCCP History

The initial odor and corrosion control system for the Northeast Interceptor was constructed as part of the original NEI project and consisted of storage and feed systems located at WB 1, COW PS 35, COW PS 34, and the Southside Wastewater Treatment Plant. Each system consisted of 560 gal. bulk storage tanks and ¾" stainless steel feed lines to either an injection manhole or air release valve manhole in the vicinity of each facility. The injection points were identified on the plans as follows:

Initial Feed System Location	Initial Injection Point Location
WB 1 (Wrightsville Beach PS 1)	Injection manhole located approximately at Station 169+40 on the Segment 1 (Town of Wrightsville Beach) 14-inch force main.
COW PS 35	Injection manhole located approximately at Station 11+50 on the Segment 1 (Town of Wrightsville Beach) 14-inch force main.
COW PS 34	Air release valve manhole at Station 7+50 on the 20-inch force main.
SSWWTP	Injection manhole located approximately at Station 8+22 on the 24-inch force main.

Table TM 2.1 – Initial Chemical Feed Locations

Over the 23 year history of the NEI system, the OCCP has varied as modifications were made either to accommodate changes in the system, or in an attempt to improve performance.

2.4.2 Current System

The City currently utilizes a 50% solution of hydrogen peroxide (H_2O_2) for both liquid phase odor and corrosion control in the NEI system as well as throughout portions of the City's wastewater collection system. The use of hydrogen peroxide requires that the City have numerous dosing/application sites throughout the collection system. Facilities at each of the application sites consist of two (2) positive displacement chemical feed pumps, 316 stainless steel or PVC schedule 80 piping, and polypropylene chemical storage tanks. Currently there are a total of 16 application sites in the current wastewater collection system as indicated in the OCCP Contract included in Appendix A.

Of these locations, Site Nos. 3, 4, 5, & 7 are part of the NEI system (Segment 2). Site Nos. 1, 2, 11, and 12 are on other systems that are tributary to the NEI. These sites are identified in Table TM 2.2 and shown schematically in Figure TM 2.1:

Table TM 2.2 – Current Northeast Interceptor OCCP Application Sites

Site No.	Application Site	Locations Available for Chemical Discharge Piping from Site to Wastewater Flow and Vapor Chemical Treatment for Atmospheric Emission
1	Town Lift Station #1 (WB1)	Liquid chemical treatment connection to 3/8" stainless steel tubing available at lift station site which doses approximately 1,000 feet upstream.
2	Town Lift Station #5 (WB5)	Liquid chemical treatment connection to 1" PVC schedule 80 pipe available at lift station site. Pipe is already connected to a tap on 14" force main.
3	City/District Bradley Creek Pump Station #35 (COW 35)	(A) Liquid chemical treatment connection to 3/8" stainless steel tubing available at lift station which doses into exit force main. (B) 980 cu ft. total volume vapor reaction chambers.
4	District Alfords Lift Station #43 (NHC43)	Liquid chemical treatment connection to 3/8" stainless steel tubing available at lift station site. Pipe is already connected to a tap on 20" joint use (Northeast Interceptor) force main.
5	City/District Hewletts Creek Pump Station #34 (COW 34)	(A) Liquid chemical treatment free flow into open channel ahead of station wet well; or (B) liquid chemical treatment tap on 24" force main within station site outside building will be permitted if equipment, labor, and materials for tap by OCCP CONTRACTOR at no added cost to City. (C) 490 cu ft total volume vapor reaction chamber.

Table TM2.2 (cont.) – Current Northeast Interceptor OCCP Application Sites

Site No.	Application Site	Locations Available for Chemical Discharge Piping from Site to Wastewater Flow and Vapor Chemical Treatment for Atmospheric Emission
7	City Independence Blvd. West Pump Station #36 (COW 36)	(A) Liquid chemical treatment connection to 1/2" PVC schedule 80 pipe available at pump station site. Pipe is already connected to a tap on 24" Northeast Intercepter forcemain.
11	District Westwood Dr. Lift Station 77 (NHC 77)	Liquid chemical treatment free flow into wet well.
12	District Shamrock Pump Station #35 (NHC 35)	Liquid chemical treatment connection to 1/2" stainless steel pipe tapped on 10" Cape Fear Utilities force main. Force main is in right-of-way adjacent to station site on opposite side of roadway.

Additionally, the City's current OCCP system utilizes an activated carbon adsorption air scrubber system for the control of hydrogen sulfide emissions in the vapor phase. Vapor treatment facilities are installed at locations 3 and 5 on the NEI which utilize a combination of fiberglass reinforced polyester (FRP) ducts and centrifugal, belt driven fans to collect the hydrogen sulfide gas from the pump station facilities and then pass it through a set of FRP chambers filled with granular activated carbon (GAC) to remove the contaminants. The cleaned odorless air is then reintroduced back into the atmosphere.

2.4.3 Review of Historical Data

Included in the Appendix of the PER are the 2005 historical data records from the City's existing OCCP system. This data was evaluated and graphed for several of the parameters to look for significant trends or correlations between the concentrations of H_2S, the consumptions of chemicals, and the overall operation of the OCCP System. A review of these graphs indicates what appears to be an over-adjustment in the chemical application based on the changes in the H_2S and a general lag in the application of the chemical relative to the change in the concentration of the H_2S sampled. It is important to note that according to the information collected at this location that the consumption of H_2O_2 (gpd) does not vary in direct proportionality with the amount of H_2S sampled in the air. It is believed that this is a result of the method of operation that the City currently employs for the OCCP by having an OCCP contractor manually test, monitor and adjust the chemical dosages to maintain a balanced system. This also indicates that the manual testing and adjustment of the system, though handled well, is not the most efficient method of operating the OCCP System and therefore is not providing the City with the most cost effective use of the chemical and manpower. This information is presented in Appendix C.

Current wastewater parameters (both liquid and vapor phase) were collected for the existing OCCP System between January 2005 and December 2005 for the NEI system near COW PS 34 and COW PS 35. A range of these values for both stations are listed below and compared to the OCCP Contract requirements to evaluate compliance. Due to the limited number of sampling points in the NEI system these numbers only indicate a representative sample of the systems compliance. To perform a more thorough analysis more sampling points would have to be installed.

Table TM 2.3 – Northeast Interceptor OCCP Parameters

Parameter	COW PS 34	COW PS 35	OCCP Contract	OCCP Contract Compliance
Ph	6.9 to 7.0	6.9 to 7.0	7.8-8.2	**NO**
Temperature	57°F to 81°F	57°F to 82°F	N/A	N/A
Total Sulfide	0.0 mg/1 to 0.2 mg/1	0.3 mg/1 to 0.4 mg/1	0.75 mg/l max	YES
H_2S in air	14 ppm to 45 ppm	N/A	3 ppm max	**NO**

2.4.4 Review of USFILTER Northeast Interceptor Corrosion Evaluation

Included as Appendix D is a copy of a corrosion evaluation performed by US Filter for the NEI. A review of the evaluation generally validates the information that has been obtained to date by Kimley-Horn for the NEI project. The US Filter study basically looks at obvious force main alignment and length issues and indicates where the highest potential for problems with hydrogen sulfide would occur.

2.4.5 Observations, Conclusions, and Recommendations

The design and operation of the current odor and corrosion controls program appears to be inadequately suited for the scope of the NEI project and currently does not address the various parameters of concern within the NEI system. In-fact, the information illustrated in Table TM 2.3 indicates that hydrogen peroxide is not meeting the systems OCCP contractual requirements at the specific sampling locations. However, the system could easily be modified to incorporate features that would certainly make the monitoring, effectiveness, and operation and maintenance of the OCCP system much more functional.

1. *Eliminate system "headlosses" and consider changing chemicals*: It is our understanding that currently, the City is experiencing a concentrated rise in the consumption of both the hydrogen peroxide solution and the activated carbon. A review of the City's OCCP system indicates that timing of modifications to the influent wastewater piping at PS 35 directly correlates with the timing of the increases in the consumption of these two materials. Technical data indicates that there is a direct correlation between creating a "headloss" in a system that carries wastewater with hydrogen sulfide in solution and the rapid release of hydrogen sulfide into its vapor form, unless the hydrogen sulfide is controlled by a chemical

additive. Hydrogen peroxide, because of it's short life, generally does not have the capability to control hydrogen sulfide under this scenario and therefore may be contributing to the additional consumption of the activated carbon in the air scrubber system. In an effort to control the spike in hydrogen sulfide, additional quantities of hydrogen peroxide are being added which is adding to the consumption of that chemical. Additionally, the consumption of activated carbon has also increased significantly over the past three years at a substantial cost to the City. Ultimately, if the hydraulic problem is not fixed and/or a more appropriate chemical is not used, the high consumption of these materials will continue as will the associated rise in the operational costs.

2. *Automate monitoring and chemical feed control*: We believe that in order for the City to have an efficiently operating OCCP system, that some level of automated monitoring and chemical feed control is necessary. This would provide the City with an "immediate response" to changes in the OCCP System that would require adjustments in the consumption of chemicals and provide the City with a much more efficient and cost effective chemical dosing program, thereby maximizing the utilization of the required chemicals without overdosing or underdosing. An added feature is the capability for the system to automatically notify the system operators of an unusual or out-of-normal system occurrence. Fortunately, there are a number of quality automatic monitoring systems available today that were not available during the last evaluation of the City's OCCP System. The VersaDose system manufactured by US Filter is one such system.

   The use of an automated system to monitor and control a system with magnesium hydroxide or calcium nitrate is fairly simple and these sampling and injection points are primarily located at the beginning and the end of the NEI system. However, hydrogen peroxide is much more complicated than that for magnesium hydroxide or calcium nitrate. Hydrogen peroxide provides a "saw-tooth" affect in its control of hydrogen sulfide within the NEI system and there are many factors that influence this. The two most influential are the concentration of H_2S in the system and the flow rate of the wastewater. Sampling is complicated by the varying location of the saw-tooth affect based on the changes in the above conditions and therefore to adequately analyze and control the system additional intermediate sampling and chemical injections points would need to be installed.

3. *Promote competition with compatible material and facilities*: Because the system is extensively set up utilizing hydrogen peroxide, it prohibits the use of alternative chemicals and systems from being easily incorporated into the OCCP system, thereby limiting the promotion of competitive OCCP systems and prices for services. It also requires that the City utilize the services of an OCCP Contractor, as the current system is fairly complex in nature to operate. We recommend that the City install materials of construction that would permit the City to easily convert from one chemical to another without having to incorporate major modifications to the chemical feed system. Using materials for the chemical feed system piping, pumps, valves, storage tanks, etc. that can be used with all of the viable chemicals will simplify the operation and maintenance of the OCCP system and provide the City with an infinite amount of flexibility in adjusting the chemical feed system to the ever changing needs of the OCCP system.

4. *Improve operational flexibility by developing a system that can be operated and maintained by the City*: Operational flexibility with the current OCCP is limited not only by incompatible materials and facilities but by the chemicals in use as well. The 50% hydrogen peroxide, which is currently being used, is classified by MSDS as a hazardous, highly corrosive oxidizer, which in-turn requires special handling. The use of this chemical requires that the City continue to subcontract the services of an OCCP Contractor to perform these services. A focal point of this study is to determine if there is a feasible means to provide an effective odor and corrosion control plan utilizing the City's current staff. This is of course dependent primarily upon the volatility of the OCCP chemicals used and the willingness of the City to perform these services internally.

The overall complexity and expansiveness of the existing OCCP system will also have a direct impact on this decision. Ideally, if the system can be designed so that the system utilizes a SCADA system that will automate the chemical monitoring and dosing, it is envisioned that City's personnel will be able to operate and maintain the required system. As indicated above, the existing system is not fully automated and periodic testing and subsequent adjustments to the chemical dosing must be manually performed by the OCCP Contractor. Again, most municipalities prefer that these services be performed by a specialized OCCP Contractor specifically trained to handle these hazardous chemicals and not by their own forces.

2.4.6 OCCP Contract (Altivia Contract)

The City of Wilmington has an Agreement in place with U. S. Filter Corporation (formerly Altivia Corporation) for the operation and maintenance of the City's current OCCP (Appendix A). This includes not only the NEI system, but other sewer system components of the City, New Hanover County and the Town of Wrightsville Beach. This Agreement spells out in detail the requirements of the OCCP Contractor for services over a three (3) year service period. The Scope of Services in the OCCP Contract includes assuming unit responsibility for the continuous multi-phase (liquid and vapor) odor and corrosion control protection for the force main wastewater collection system.

The OCCP Contract scope of services includes

(1) defining application sites, control segments and chemical products to be used at each application site

(2) designing equipment type and sizes for application sites, and providing details of construction, consistent with the requirements of the Contract

(3) defining any one-time or periodic special applications (line pigging, special chemical "slug," etc .) designed to reduce the overall costs of odor and corrosion control by conditioning the collection system to require lower dosages of the chemical products continuously in use

(4) supplying, installing, and maintaining vapor reaction chambers, chemical storage tanks, chemical and vapor transfer equipment, controls, piping, valving, and other associated appurtenances

(5) coordinating and supplying the chemicals to be stored in the on-site storage tanks and vapor reaction chambers as required for odor and corrosion control

(6) providing technical services to assist City to operate and maintain the chemical treatment equipment and appurtenances, monitor and adjust feed rates to optimize the cost-effectiveness of its use, to schedule and arrange for chemical deliveries at each application site

(7) maintaining chemical feed equipment and appurtenances

Review of this Agreement indicates that the Agreement with U. S. Filter Corporation will expire on January 1, 2007. Therefore, a new Agreement must be in place and functional by this date.

The 50% hydrogen peroxide solution system currently in use is considered hazardous and very corrosive and basically a chemical that is too hazardous to handle by City personnel. It is our understanding that this is why the City felt it was necessary to enter into such an Agreement for OCCP contractor services. It is our experience that most municipalities that utilize corrosive and hazardous chemicals also utilize a contractor that specializes in the use of these chemicals. However, this in itself limits the municipalities' flexibility in using other viable chemicals in the treatment of odor and corrosion in their wastewater systems.

In the past the City has provided several OCCP System operational contract service providers the opportunity to provide the required OCCP System services to the City though a highly defined testing process and then an actual pilot testing/demonstration process. Based on the results of the testing requirements, the City selected a list of viable chemicals that would be permitted to be used in the OCCP system. The current OCCP contractor was then selected based on the lowest bid submitted for the permitted chemicals. However, it is our understanding that one major issue that has presented a problem to the City in preventing competition was the capital cost required to upgrade the OCCP System to accommodate alternative chemicals proposed for testing which had to be borne by any new service provider. Since 50% hydrogen peroxide is the chemical that is currently being used by the City and has been for numerous years, the City's total OCCP infrastructure is designed and compatible with 50% hydrogen peroxide and the infrastructure costs have been prohibitive for changing out this system. In order to "level the playing field" it is our recommendation that all potential OCCP Contractors, under the new contract, would be required to update the existing chemical feed system to accommodate all of the chemicals regardless of the chemical the particular supplier provides. Specific minimum feed system facilities as depicted in Figure TM 2.2 would be required. Also included in this report is an evaluation of the viable materials for all chemicals that have potential merit. This was done in an effort to provide the City with a method to make their current system more viable to other vendors and therefore more cost competitive than a proprietary system as they currently have.

2.4.6.1 Standards of Performance

The current OCCP program has very specific requirements for the OCCP Contactor to provide the City with complete odor and corrosion control protection that reduces or eliminates costly corrosion in the wastewater collection and transference system, controls the associated off gases which create a

public nuisance, and optimizes the efficiency of the system to reduce costs. To achieve this, there has to be a practical balance between what can be removed and what has to be controlled. It is not cost effective or practical to fully eliminate hydrogen sulfide in the liquid phase with chemicals only, nor control the off-gas in the vapor phase with only an odor condition system. Therefore there are performance requirements provided in the current contract that limit the maximum amounts of hydrogen sulfide that can remain in both the liquid phase and the vapor phase after treatment has been performed.

In general, after treatment, the maximum concentration of dissolved H_2S in the wastewater is 0.75 ppm at any point in the treated system and the maximum concentration of H_2S in gaseous form released from the wastewater is 3.0 ppm at any location in the treated system. Additionally, to prevent overdosing and the associated costs of wasted chemicals, the Contract stipulates the maximum amount of chemical residual permitted after dosing. Finally, because corrosion is a major concern for the City's infrastructure, the current Contract stipulates the maximum amount of corrosion that can occur over a given period of time.

More specifically, the contractual standards of performance per paragraph 2.3.6 of the Contract are as follows:

1.) maximum dissolved hydrogen sulfide concentration in the wastewater of 0.75 mg/l at any point along the control segment

2.) maximum airborne hydrogen sulfide concentration of 3.0 mg/l at the PS 34 grit chamber

3.) maximum dissolved hydrogen sulfide concentration of less than 0.75 mg/L at permissible sample points along a control segment except specific locations stated in 2.) above

4.) maximum airborne hydrogen sulfide concentration of 3.0 mg/l at any public interface locations such as manhole covers and treatment plant or pump station fence lines or property lines along control segments where the public has access to City wastewater facilities

5.) product residual at the end of each control segment of less then 10% of the concentration initially fed at the application site

6.) maximum head space hydrogen sulfide concentration of 20 mg/l at any point along the control segment, headspace being defined as any essentially enclosed or confined atmosphere above the wastewater within the collection system

7.) maintaining the wastewater pH between a range of 7.8 and 8.2 at any point along the control segment

8.) compliance with NCDENR Air Permit Nos. 5778 R4 AND 5779 R4

9.) other airborne contaminants exceeding applicable duly established regulatory limits

10.) loss of any materials of construction through wastewater-induced corrosive action exceeding 20% of its original manufactured dimensions (20% total corrosion allowance life cycle; 1%

average corrosion allowance annually) or as otherwise established by its manufacturer or other applicable code or requirement, as measured upon the actual component or coupon intended to afford comparable information on material degradation, no loss in function or other induced material failure, such as, for example, wiring material, connections, and insulation, either broad/general or localized, caused by constituents associated with wastewater either dissolved within or imparted to the immediate atmosphere at any City facility or component within associated with the system under control.

2.4.6.2 Recommended Modifications

Our review of the current US Filter (Altivia) Corporation contract indicates that this contract was in-fact very well written and covers most of the major issues associated with the City's OCCP system, at the time of its writing. Following Kimley-Horn's review of the OCCP contract, we identified several areas of the current contract that the City should consider modifying to update the contract to incorporate revisions to the OCCP system. Accordingly, we have made comments pertaining to the existing contract utilizing the "track changes" feature found in Microsoft Word. Most of the proposed modifications are based on newer and more current technology and place an emphasis on providing the City with an OCCP system that is easy to operate and maintain. The ultimate goal is to provide the City with an OCCP system that within three years the City's staff will be comfortable with operating and maintaining the system themselves and thereby eliminating the OCCP Contractor all together, if desired, and reducing the costs to operate and maintain the OCCP system. One significant modification would be to incorporate changes in the materials that the infrastructure of OCCP system is constructed of to permit the City to easily convert from one viable chemical system to another, based on changing system conditions. The proposed modifications are based on the information generated in other sections of this report. The Contract with the proposed revisions is included as Appendix E.

2.5 Viable Odor and Corrosion Control Alternatives

Kimley-Horn has reviewed and analyzed the technical information for commercially available OCCP systems associated with both liquid phase chemicals and vapor phase odor control systems. We also reviewed this information with a number of OCCP Contractors who routinely perform these same services to municipalities throughout the southeast, particularly systems that are similar in nature to the NEI system. Based on this information, and the experience of the project team members, we have developed a matrix of how these systems perform and what the advantages and disadvantages are for their use. Several chemicals evaluated are either too hazardous to recommend further consideration or are no longer routinely used within the industry for the required use.

Table TM 2.4 below provides a list of viable odor and corrosion control alternatives for the liquid phase and an extensive list of evaluation criteria. Items evaluated in Table TM 2.4 focus on several viable chemicals the wastewater industry regularly uses for odor and corrosion control in wastewater systems similar to the NEI Project. Additionally, we have also developed a list of viable odor control alternatives for the vapor phase requirements of this project.

2.5.1 Evaluation Criteria

In order to evaluate the viability of potential chemicals for odor and corrosion control, a list of criteria was developed. These criteria have been grouped into nine categories as follows:

Availability – The availability of a chemical is not only critical for continuous supply, but also critical for competitive pricing. We have identified the availability of each chemical and identified the local manufacturer to evaluate the opportunity for competitive bidding.

Delivery Unit Cost – While chemical cost alone does not indicate the more feasible alternative; it is an important part of the equation. We have provided the unit cost for the chemical only as provided to us by the individual chemical suppliers.

Chemical Properties – Chemical properties pertinent to system operation have been provided for review and evaluation.

Effectiveness – As the goal of the OCCP is a specified effectiveness, it is paramount to evaluating projected costs and evaluating the feasibility of each chemical. The chemicals effectiveness in reducing H_2S in solution as well as in headspace is provided.

Dosing Characteristics – Along with the chemical unit cost, the dosing characteristics such as the typical treatment ratio provide insight into the actual cost of the system.

System Compatibility – It will be critical that changes made to the odor and corrosion control on the NEI are compatible with other odor and corrosion control systems that are upstream of the NEI as well as treatment facilities that are downstream. This category includes a list of criteria to assist with the evaluation of each chemicals compatibility with the existing wastewater collection and treatment system.

Operational Flexibility – Operation flexibility is also critical to achieving competitive bids. This criteria documents what materials are most and least compatible with each viable chemical evaluated and is used to determine if there is a material that is suitable for use with all of the viable chemicals without having to change out the material of the chemical feed infrastructure.

Safety – This criteria is developed from MSDS data sheets and indicates how safe each chemical is to handle and use.

Use by municipality – This information provides important insight into the trend for chemical use among the other municipalities.

2.5.2 Material Evaluation Criteria

In Table TM 2.4, there is a list of criteria established for chemical handling and storage safety and the availability of these chemicals to be delivered to the City. Additionally, Table TM 2.4 includes a list of the materials that are suitable for use with each of the chemicals evaluated. It is important to note that viable materials for pumping and sampling equipment, piping, valves and storage tanks are indicated as either "A-Excellent" or "B-Good". For the purpose of this study we are only considering

the use of "A-Excellent" rated materials. This selection is based on the understanding that "A-Excellent" rated materials will provide the City with a longer service life for piping, gaskets, valves, storage tanks and pumps than materials that are rated "B-Good". The corrosion and ultimate degradation of "B-Good" rated materials will occur at an unpredictable rate and since many of the "A-Excellent" rated materials are very easily obtained without special order, this selection would provide the City with a cost effective chemical system. Given this criterion, Table TM2.1 indicates that the most suitable materials rated "A-Excellent" for all five chemicals across the board are CPVC, PTFE, and PVC.

However, if we also look primarily at the two most viable chemicals evaluated (Magnesium Hydroxide and Calcium Nitrate), it is equally as important to note that a larger number of "A-Excellent" rated materials are available for use. Those materials include Buna N, EPDM, Hapalon, Natural Rubber, Neoprene, Polypropylene and Viton. All of these materials are commonly found in the manufacture of pumping and storage facilities or as gasket and seal materials.

The purpose of this evaluation is to also identify materials suitable for all of the chemicals evaluated in order to find a "common material" suitable for the use with any of the evaluated chemicals. This information places the City in a position to modify or replace any chemical in use with any of the other viable chemicals without major changes to the chemical feed system. If the City evaluates performing modifications to the current chemical feed system to any of these materials the, City is not locked it to any one specific chemical supplier or their contract services. This flexibility gives the City a fair amount of control over operational flexibility of the NEI System and this in-turn will promote competition between vendors. Additionally, the controls of both odor and corrosion in a system like the NEI are not "static". In-fact it can be very dynamic and the City needs the flexibility to change operating systems as the characteristics of their system changes. Additional flows, new customers with significantly different wastewater characteristics, etc. can and does change often in a system like the NEI. Maintaining flexibility in the OCCP System is essential to providing the City with a convenient and economical means to handle these system changes.

As indicated elsewhere in this report hydrogen sulfide concentrations as low as between (0.1 – 1.0 ppm) can be detected by the human nose and therefore its volume emitted must be limited to below this threshold in order to prevent odor complaints. It appears that with the use of several of the viable chemicals, there is a satisfactory reduction in the liquid phase hydrogen sulfide with will permit the adequate reduction on vapor phase generating of hydrogen sulfide to below the above indicated limits. Most importantly, this can be accomplished in an economical manner balancing the addition of liquid phase chemicals with vapor phase odor treatment. As indicated elsewhere in this report, one goal of this study is to develop a chemical feed system that is safe for the City's staff to work with and very effective on reducing and/or eliminating hydrogen sulfide and it's adverse affects on the NEI system. The ultimate goal is to provide a system that within three (3) years the City will be able to easily understand, operate and maintain by themselves and not have to rely on an OCCP Contractor to provide these services. Since cost is always an issue with these types of systems, the ability of the City to perform these services would have a fairly large impact on the overall cost to provide an effective OCCP program.

Table TM 2.4 – Odor and Corrosion Control Alternatives Comparison

Evaluation Criteria	Chemical			
	Thioguard (Magnesium Hydroxide ($Mg(OH)_2$))	50% Hydrogen Peroxide (H_2O_2)	Calcium Nitrate (Bioxide®)	Biogon 109®
Chemical Availability				
Purchase Availability	Restrictive	Available	Restrictive	Restrictive
List of Manufacturers	Premier Chemicals	FMC Corporation	US Filter	
Manufacturers Contact Number	1-800-227-4287	1-215-299-6000	1-215-299-6000	
Proprietary Chemical?	Yes	No	Yes	Yes
Chemical Cost				
Delivery Price	$1.70/gal	$2.40/gal	$1.95/gal	
Chemical Properties				
Chemical Family	Inorganic Oxide		Inorganic Salt	
Freezing Point	32˚F	-62˚F	-5˚F	
pH	10.2	2.0-3.0	5.5-7.5	
Chemical Effectiveness				
Reaction with H_2S to reduce to less than 0.1 ppm	Yes	Yes – difficult for long detention times	Yes	
Susceptibility to the reformation of H_2S?	No	Yes	No	
Head-Space H_2S Reduction	Yes	Yes	Yes	
Affected by Turbulance	No	Yes	No	
Dosing Characteristics				
Theoretical Use Ratio	0.204 gal/# H_2S	0.2 – 1.0 gal/# H_2S	0.7 – 2.1 gal/# H_2S	
Estimated % Reduction in Chemical Dosing from Summer to Winter	10-15%	30-50%	30-50%	
Are Multiple Dosing Sites Required (1)	System Specific	Yes	No	
Is a water supply required for this chemical	Yes	Yes	Yes	

(1) All of these products may have to be applied more than once to treat the NEI.

Table TM 2.4 – Odor and Corrosion Control Alternatives Comparison

Evaluation Criteria	Chemical			
	Thioguard (Magnesium Hydroxide ($Mg(OH)_2$))	50% Hydrogen Peroxide (H_2O_2)	Calcium Nitrate (Bioxide®)	Biogon 109®
System Compatibility				
Reaction with 50% hydrogen peroxide	Releases O^2	N/A	None/Known	
Adverse reactions that occur	None	See MSDS for complete list	(2)	
Reactions/Affects on anaerobic digesters		None	None	
Reaction with chemicals normally found in the wastewater treatment process	Adds alkalinity, precipitates heavy metals	(3)	(3)	
Over-Treatment Implications	None	Additional D.O.	Increases nitrate load on WWTP if grossly overfed	
Effects on Fats, Oils and Grease	Positive Reduction	Emulsifies at higher dose	None	
Affects on Sulfate Reducing Bacterial (SBR's)	Inactivates SRB's	Aerobic environment immediately downstream of dose, not conducive to SRB survival	Aerobic environment immediately downstream of dose, not conducive to SRB survival	
What is the effect on the "slim layer" on the interior of the pipe?	Inactivates SRB's	Aerobic environment immediately downstream of dose, not conducive to SRB survival, thus the slime layer growth is aerobic	Aerobic environment immediately downstream of dose, not conducive to SRB survival, thus the slime layer is anoxic	

(2) Incompatible with organic materials, reducing agents, chlorine, hypochlorite and caustic
(3) If added to sewage, the following reactions occur: Bioxide and Peroxide – none, Bioxide and Peroxide downstream of Odophos will possibly oxidize the ferrous sulfide to sulfate.

Table TM 2.4 – Odor and Corrosion Control Alternatives Comparison

Evaluation Criteria	Chemical			
	Thioguard (Magnesium Hydroxide ($Mg(OH)_2$))	50% Hydrogen Peroxide (H_2O_2)	Calcium Nitrate (Bioxide®)	Biogon 109®
Operational Flexibility				
Most Compatible Valve and Fitting Materials	316 SS/PVC	HDPE/316 SS/PVC	PVC	
Compatible Pipe Materials	316 SS	HDPE/316 SS	PVC	
Compatible Storage Tank Materials	HDPP	HDPE/316 SS	HDXLPE	
Compatible Pump Equipment Materials	HDPP	304 SS	PVC	
Storage Tank Mixing Required	Yes	No	No	
Compatibility of Materials Cross-Reference				
• 316 Stainless Steel	A-Excellent	A-Excellent	B–Good	
• 304 Stainless Steel	B–Good	B–Good	C-Fair	
• Aluminum	C-Fair	A-Excellent	B–Good	
• Buna N	A-Excellent	D-Severe Effect	A-Excellent	
• Carbon Steel	A-Excellent	D-Severe Effect	B–Good	
• **CPVC**	**A-Excellent**	**A-Excellent**	**A-Excellent**	
• EPDM	A-Excellent	B–Good	A-Excellent	
• Hastelloy-C	A-Excellent	A-Excellent	B–Good	
• Hapalon	A-Excellent	D-Severe Effect	A-Excellent	
• Natural Rubber	A-Excellent	C-Fair	A-Excellent	
• Neoprene	A-Excellent	D-Severe Effect	A-Excellent	
• **Polypropylene**	**A-Excellent**	**B–Good**	**A-Excellent**	
• **PTFE**	**A-Excellent**	**A-Excellent**	**A-Excellent**	
• **PVC**	**A-Excellent**	**A-Excellent**	**A-Excellent**	
• **Viton**	**A-Excellent**	**A-Excellent**	**A-Excellent**	

Table TM 2.4 – Odor and Corrosion Control Alternatives Comparison

Evaluation Criteria	Chemical			
	Thioguard (Magnesium Hydroxide ($Mg(OH)_2$))	50% Hydrogen Peroxide (H_2O_2)	Calcium Nitrate (Bioxide®)	Biogon 109®
Safety				
Safety Classification	Very Safe	Hazardous	Very Safe	
MSDS Information				
Section 3 - Hazard Identification				
• NFPA Health Rating	0	3	1	
• NFPA Fire Rating	0	0	0	
• NFPA Reactivity Rating	0	1	1	
Acute Health Hazards				
• Eye Contact	Particulate is an eye irritant	Severe irritation or burns. May cause blindness	Is an eye irritant	
• Skin Contact	Slight skin irritation	Severe irritation or burns	Is a skin irritant	
• Inhalation	Irritation to nose, throat and upper respiratory tract	Irritation to nose, throat and upper respiratory tract	Irritation to nose, throat and upper respiratory tract	
• Ingestion	May cause gastrointestinal tract, nausea, vomiting, diarrhea	May cause gastrointestinal tract, nausea, vomiting, diarrhea	Large amounts may cause violent gastroenteritis	
Section 7 – Handling and Storage	Do not store in aluminum or allow to freeze	Do not store in direct sunlight or near heat	Do not store near combustible or oxidizable materials	
Section 8 – Exposure Controls/Protection				
• Safety shower and eye wash required	Yes	Yes	Yes	
• Protective gear required (apron, gloves, coveralls, chemical safety goggles)	Recommended	Required	Recommended	

Table TM 2.4 – Odor and Corrosion Control Alternatives Comparison

Evaluation Criteria	Chemical			
	Thioguard (Magnesium Hydroxide ($Mg(OH)_2$))	50% Hydrogen Peroxide (H_2O_2)	Calcium Nitrate (Bioxide®)	Biogon 109®
Safety (continued)				
• Respirator recommended/required	Recommended	Yes	None Required	
Section 14 – Transportation Data				
• DOT Placard Requirements	Not Required	Required	Not Required	
• DOT Label	N/A	Oxidizer - Corrosive	N/A	
• Emergency Response Guide Number	N/A		N/A	
Use by municipalities				
City of Raleigh, NC		X	X	
City of Durham, NC			X	
City of Greensboro, NC	**Pending**		X	
City of Charlotte, NC			X	
City of Savannah, GA			X	
Johnson County, NC	X			
City of Charleston, SC	X			
City of Baltimore, MD	X			
City of Tampa, FL	X		X	
Hampton Roads Sanitary District				
City of North Charleston, SC	**Testing**			
Stafford County, VA	X			
City of North Myrtle Beach, SC			X	
City of Myrtle Beach, SC			X	
City of Tallahassee, FL			X	
Berkley County, SC			X	
Sarasota County, FL			X	
Manatee County, FL			X	
Hillsborough County, FL			X	

2.5.3 System Monitoring Recommendations

In the liquid phase treatment of the NEI, with the use of either magnesium hydroxide or calcium nitrate, it is anticipated that only a minimal number of injection and sampling locations would be required, due to the extended life of the chemicals affects. Accordingly, we anticipate that with magnesium hydroxide or calcium nitrate monitoring/sampling points would be required at the influent to COW PS 35, COW PS 34, and the Southside WWTP. If it is determined that hydrogen peroxide would be used then the sampling points would have to revised from current locations and more sampling and injection points would be required. The items that would be monitored are as follows:

- Wastewater Ph
- Wastewater Temperature (°F)
- Total Sulfide in solution (ppm)
- H_2S in air (ppm)

The OCCP System for the NEI should, at a minimum, monitor the following vapor phase variables or conditions:

Process Parameters	Data
Service Duty	Continuous
Climate	Outdoors – Moderate Climate
Ambient Air Temperature	
Inlet Air Temperature	
Total Air Volume (acfm)	
Average Inlet Relative Humidity (RH)	
Average Inlet Particulate Concentration	
Type of Contamination	H_2S
Average H_2S Inlet Concentration	___ ppm
Maximum H_2S Inlet Concentration	___ ppm
Maximum H2S Outlet Concentration	___ ppm
Minimum H_2S Removal Required	99.5%

Table TM 2.5 – Initial Chemical Feed Locations

2.5.4 Recommended Thresholds

Based on the accumulated pre-bench testing data, it appears that the following changes in the threshold parameters will be required to permit the NEI's OCCP system to work effectively.

Parameters	Magnesium Hydroxide	Calcium Nitrate	Hydrogen Peroxide
pH	8.2 – 9.0	6.9 – 7.0	6.9 – 7.0
H2S in Solution	(unlimited)	0.5 mg/l (max)	0.5 mg/l (max)
H2S in Air	1.5 ppm (max)	1.5 ppm (max)	1.5 ppm (max)

Table TM 2. 6 – Initial Chemical Feed Locations

2.5.5 Comparison of Recommended Thresholds to Contract Standards of Performance

Based on the current OCCP Contract pH requirements, the above numbers represent an increase in pH from 7.8 – 8.2 to 8.2 – 9.0 for Magnesium Hydroxide and a decrease in pH from 7.8 – 8.2 to 6.9 – 7.0 for Calcium Nitrate and Hydrogen Peroxide. The H2S in solution should be changed from 0.75 mg/l to unlimited for Magnesium Hydroxide and from 0.75 mg/l to 0.50 mg/l for Calcium Nitrate and Hydrogen Peroxide. It appears from the data provided by the chemical manufacturers for all of these chemicals that these new parameters can be economically achieved.

During the development of the study thresholds it will be very important to determine the actual ratio of chemical required to neutralize or remove a specific amount of H_2S in solution. It is a common practice to start out with a liquid with 0 ppm of H_2S and gradually increase the concentration of H_2S in solution until the maximum amount of anticipated H_2S in solution is obtained. Once this ratio is obtained for each viable chemical such as Bioxide, which works on the basis of the actual concentration of H_2S in solution, that a definitive relationship can be developed for chemical consumption on a grander scale thorough a pilot test. This is important due to the variable differences between a laboratory bench test and a pilot test on the actual wastewater found in the City's system.

For magnesium hydroxide which is primarily based on raising the pH in the water versus actually knowing the amount of H_2S in solution, testing would require that a proportional ratio be developed between the flow rate of the wastewater and the amount of chemical required to raise the pH to 8.2. Again, once this ratio is established pilot testing should be performed to make sure that the product reacts in a similar nature with the actual wastewater system.

2.5.6 Evaluation of "Chemical" Corrosion Control System Alternatives (See Table TM 2.4)

Multiple products were investigated for their potential to prevent corrosion and odor problems at COW 34 and COW 35 and in the long NEI force main. These products include oxidizers, iron salts, nitrate salts, and alkalines. Below is a basic description of each chemical and the advantages and disadvantages of each.

2.5.6.1 Chlorine

Due to the extended length of the force main for the NEI project oxidizers are not considered viable. An oxidizer would require multiple dosing stations due to its short retention time. Multiple re-dosing stations would require increased maintenance costs to maintain the additional equipment and deliveries for the chemical feed systems. In addition, oxidizers are non-specific in nature and this would likely lead to high doses of chemical to achieve the reduction in hydrogen sulfide that is required. In addition, the safety of operating personnel is an issue due to the procedures required for the handling of a Comprehensive Environmental Response, Compensation, and Liability Act (CERCLA) listed product, as most oxidizers are. Some advantages and disadvantages of Chlorine are listed below.

Advantages

- Short reaction time with rapid mixing in the wastewater flow
- Reacts with many compounds found in wastewater

Disadvantages

- Direct injection is dangerous due to potential downstream fuming and the potential release of dangerous gas.
- Non-specific reactant which can also kill organisms beneficial to the wastewater treatment process
- Multiple re-dosing stations required
- CERCLA listed as a hazardous material

2.5.6.2 Thioguard® (Magnesium Hydroxide)

Thioguard® is a safe alkaline, non-hazardous material with a magnesium hydroxide based chemical and when added to wastewater it raises the pH through a relatively slow controlled release of hydroxyl (OH^-) ions. Raising the pH to about 8.2 is sufficient to achieve a greater than 95% reduction in hydrogen sulfide gas emission in high sulfide systems whereby the magnesium hydroxide keeps sulfides in a liquid phase reducing hydrogen sulfide odors and related sewer corrosion. Magnesium hydroxide is most effective when high levels of dissolved hydrogen sulfide are present.

Incidental overdosing of magnesium hydroxide will generally not threaten sensitive microbiological populations in the wastewater treatment system, and will not exceed a pH of 9.0. Additionally, it has been proven that magnesium hydroxide helps remove fats, oils and greases (FOG) from the wastewater system through a Saponification and absorption mechanism.

An added benefit under certain wastewater treatment plant processes is that magnesium hydroxide adds beneficial alkalinity to the wastewater treatment plant which will lead to an overall increase in efficiency. Magnesium hydroxide provides higher alkalinity to buffer acid generated from biological processes such as nitrification and lowers the Sludge Volume Index (SVI) in clarifiers which leads to

better dewatering and possibly the reduction of additional chemicals/polymers required for clarification and dewatering.

Advantages

- The volumetric addition of this chemical is primarily based on the volumetric flow of wastewater in the force main system and not based on the actual concentration of H_2S found in the wastewater stream, therefore magnesium hydroxide will be added at a fairly constant rate varying with the incoming flow and not as the H_2S concentration changes. Any significant increase in the wastewater system's H_2S concentration will not affect the volume of magnesium hydroxide added. Therefore significant annual increases or periodic spikes in the production of H_2S will not increase the quantity of the magnesium hydroxide added.
- The chemical is very safe to use (not CERCLA listed)
- Only a common single dosing point required. Multiple re-dosing stations are generally not required.
- The feeding system is relatively easy to operate and maintain if simple and basic safety procedures are followed.
- Application rates are simple to calculate, monitor and control due to the minimum number of variables required.

Disadvantages

- Because the volumetric addition of this chemical is primarily based on the volumetric flow of wastewater in the force main system and not based on the actual concentration of H_2S found in the wastewater stream, the magnesium hydroxide will be added at a fairly constant rate varying with the incoming flow and not as the H_2S concentration changes. Any significant reduction in the wastewater system's H_2S concentration as a result of the addition of other liquid phase chemicals upstream of the NEI (i.e.: such as hydrogen peroxide), or the colder months of the year when H_2S is not generated at the same high rate as during the warmer months, will not change the dosing of the magnesium hydroxide.
- Must have a reliable non-potable water source for system flushing to reduce the potential for clogging feed lines.
- Chemical must be constantly mixed to keep the chemical in a usable solution.

2.5.6.3 Hydrogen Peroxide

Hydrogen peroxide is an oxidant that oxidizes H_2S into sulfate or elemental sulfur. The transformation is strictly dependent upon the pH of the wastewater at the time of the reaction. Hydrogen peroxide is normally delivered as a 50% solution and typically requires a 1:3 ratio of hydrogen peroxide to sulfur. The reaction of hydrogen peroxide is almost instantaneous and therefore the hydrogen peroxide is consumed right after dosing.

Advantages

- Short reaction time with rapid mixing in the wastewater flow
- Reacts with sulfide and other odor causing compounds
- Yields a harmless byproduct
- Increases the dissolved oxygen in the wastewater when overdosed and produces no chemical residue
- Feeding system is relatively easy to operate and maintain if simple safety procedures are followed.

Disadvantages

- Is no longer considered a commonly used chemical for odor and corrosion control protection.
- Provides a difficult to manage "saw-tooth affect" in the control of hydrogen sulfide.
- Direct injection is dangerous due to potential downstream fuming and the potential release of dangerous gas.
- Non-specific reactant which can also kill organisms beneficial to the wastewater treatment process
- Multiple re-dosing stations are required
- Because hydrogen peroxide is so reactive with organic compounds, the system maintenance and operation requires special procedures, training and safety precautions.
- Most municipal users prefer to use a turn-key contractor to operate, service and maintain their systems
- Best suited if injected at a point at least 15 minutes upstream of a potential odor release point
- Generally not a problem at larger wastewater treatment plants. However, at a smaller plant this oxidizer can kill a large number of bacteria which is detrimental to the treatment process.
- CERCLA listed as a "hazardous" material

2.5.6.4 Bioxide® (Calcium Nitrate)

Calcium nitrate, otherwise known as "Bioxide®", removes and prevents hydrogen sulfide generation through a biological process. When the available oxygen in the force main is depleted the oxygen in nitrate is used for respiration in lieu of oxygen in sulfates. Since facultative and obligated anaerobic bacteria prefer nitrate to sulfate for oxygen, nitrogen gas and nitrogenous compounds are formed in-lieu of hydrogen sulfides. Therefore, no aqueous hydrogen sulfide is produced and no vaporous hydrogen sulfide can be formed to cause corrosion or odor control problems. Nitrate is more slowly absorbed than dissolved oxygen in wastewater systems and it is non-flammable and non-hazardous and therefore doesn't require any special containment facilities or safety precautions and equipment. Nitrate also provides a minimal increase in flocculants which directly result in the increased production of solids at the treatment plant.

One potential concern with nitrate salts is that during the removal process nitrogen gas is released to the atmosphere in the force main as the oxygen from the nitrate is consumed. This can potentially

cause problems in the primary clarifiers at a WWTP if the discharge of the force main is at or near the head-works of the WWTP.

Another concern regarding Bioxide® is the addition of nitrate to treatment systems that have effluent nitrate limits. While nitrate is introduced into the system it is used up in the process to prevent hydrogen sulfide formation. It is a common practice however, to overfeed the chemical to ensure that no hydrogen sulfide is formed. This process can be monitored and dosages calibrated to arrive at an ideal dosing rate.

Advantages

- Safe (not CERCLA listed)
- Single dosing point
- Reduces hydrogen sulfide concentrations to acceptable levels
- Prevents formation of hydrogen sulfide
- Biological process, not a chemical reaction
- Feed system easy to operate

Disadvantages

- Longer reaction time
- Potential for additional nitrate loading at the WWTP if overfed (likely insignificant)

2.5.6.5 ODOPHOS® (Ferrous Sulfate – FeSO4)

ODOPHOS® is effective at the prevention of corrosion and odor problems in force mains. The process that is used is a precipitation reaction that removes hydrogen sulfide from the sewage, generally turning the sewage black in color with a precipitate the consistency of talc. By reducing the amount of hydrogen sulfide in solution it also reduces the amount of hydrogen sulfide that can become gas and cause odor and corrosion problems. While this process removes the hydrogen sulfide and prevents it from causing corrosion and odor problems it also leaves a precipitate in the force main. This precipitate can lead to plugging of valves in the force main and reduce the effective diameter or plug the force main itself. This plugging can also lead to increased heads for the pump to overcome.

As a secondary benefit, the removal of phosphorous from the wastewater occurs through sedimentation when the wastewater reaches primary and secondary clarifiers. This primarily occurs in the secondary clarifiers because the ferrous has converted to ferric before it is effective as an iron salt. Oxidation generally takes place in the aeration basin.

While iron salts can reduce the level of hydrogen sulfide it is unable to remove the last portion of hydrogen sulfide in the line (approximately last 0.5 mg/l). A small amount of hydrogen sulfide in solution (approximately 1 ppm) can translate into as much as 500 ppm H_2S gas under the right conditions. This residual level of hydrogen sulfide can lead to odor problems at air release valves due to the low odor detection level of between 0.1-0.5 ppm for hydrogen sulfide. Odophos® was a very

popular odor and corrosion control chemical for many years and is still used in curtain circumstances by municipalities, but is not as popular as it used to be as a result of more popular chemicals that have come out onto the market in recent years.

Advantages

- Single dosing point
- Moderately safe (noncombustible)
- Removes phosphorous from the wastewater

Disadvantages

- It is a flocculent that increases the rate that other solids settle out so the characteristics of the wastewater will dictate if this will be a problem at the treatment plant
- Precipitation reaction can cause plugging
- CERCLA listed
- Cannot reduce hydrogen sulfide to below detectible levels
- Iron salts are acidic, so care must be exercised to avoid excessive alkalinity reduction
- The chemical is "dirty" in that it stains everything it touches.

2.5.6.6 Potassium Permanganate Solution

Potassium Permanganate is a very strong chemical oxidant that oxidizes H_2S to potassium sulfate or elemental sulfur. Typically requires a 6:1 to 7:1 ratio of Potassium Permanganate to sulfate oxidized. Potassium Permanganate also produces an insoluble chemical floc (manganese dioxide) and has had occurrences where the chemical floc improves sludge dewatering. The chemical is inherently expensive and can be explosive if it comes into contact with acids or organics. Accordingly, Potassium Permanganate is not widely used in the United States as an odor and corrosion control oxidant.

Advantages

- Single dosing point
- Reduces hydrogen sulfide concentrations to acceptable levels
- Prevents formation of hydrogen sulfide
- Biological process, not a chemical reaction

Disadvantages

- CERCLA listed
- Longer reaction time
- Potential to be messy and caustic

2.5.6.7 Recommendations for Laboratory Testing

While all products indicated herein are capable of reducing odor and corrosion in the NEI Force Main, our analysis indicates that only two of the evaluated chemicals (Magnesium Hydroxide and Calcium Nitrate) provide a much safer system as well as much higher level of control and therefore appear to provide the best solution to the City for both odor and corrosion control. These chemicals require a single dosing point at each primary feed location into the NEI system and these products, when dosed properly, should alleviate corrosion and odor control issues with minimal risk to City personnel and the general public. At the same time these chemicals should reduce the consumption of the granular activated carbon (GAC) in the air scrubber systems at COW PS 34 and COW PS 35 by reducing the hydrogen sulfide gas formation.

The laboratory testing requirements are very complex since each chemical reacts differently with hydrogen sulfide, so one simple testing procedure is not viable for all of the chemicals. Below is the final list of chemicals recommended, based on the assessment of this study. Since hydrogen peroxide is the current chemical in use and a lot of information is already known about its use, we recommend that hydrogen peroxide be considered the "baseline chemical" that the other two chemicals are measured against. Testing would then be performed on each of the three chemicals utilizing wastewater withdrawn from the worst area identified in the City's NEI system. Very stringent laboratory conditions would have to be incorporated so each chemical and the testing data it produces is a true representation of how the chemical actually responds to the characteristics of the wastewater and the hydrogen sulfide it contains. Additionally, a wastewater analysis should be performed where hydrogen sulfide is introduced into the water and a baseline analysis is performed.

<u>Liquid Phase System Chemicals</u>

- Magnesium Hydroxide -- (Premier Chemical/Brenntag Southeast)
- Calcium Nitrate -- (US Filter)

2.5.6.8 Laboratory Testing Procedures for the Odor Corrosion Control Program (OCCP)

2.5.6.8.1 Introduction

There were a number of chemicals that were evaluated for the OCCP system. Based on the results obtained in the study the chemicals determined as viable are Magnesium Hydroxide and Calcium Nitrate. At the request of the City laboratory testing is requested to be performed on all three of the chemicals, which includes hydrogen peroxide, to provide a comparison of each. The following is a list of the recommended testing procedures and the data required for each chemical. Because each chemical reacts very differently with hydrogen sulfide, the testing procedures will also have to be very different for each chemical. It is important to note that a laboratory test does not always accurately represent actual field conditions due to factors that cannot be recreated in the laboratory for each type of chemical. The reader must be aware of this and recognize that other factors such as effects of a "slime layer" on the barrel of the pipe cannot be predicted in the laboratory. Inaccurate conclusions can be arrived at by only looking at laboratory test results without taking into account the manufacture's own testing data.

Bench testing has somewhat limited value when testing for the removal and/or generation of sulfides and determining if one chemical has added value over another. Most research and development results are determined by actual field testing by the manufacturer of the product. Accordingly, laboratory testing for the NEI – OCCP is intended to determine which chemicals are effective on hydrogen sulfide and are therefore viable for use the selection process in a new OCCP Contract. The laboratory testing will also help establish the usage rates of the viable chemicals and provide the City with a very good approximation of the chemical consumption for the NEI and the associated costs. Thereby providing the City with a means to determine if the proposed costs for these chemicals through the NEI contract by the various chemical suppliers is reasonable.

2.5.6.8.2 Basic Laboratory Setup Requirements

1. Laboratory testing should be arranged so that no extraneous air can either enter or leave the testing vessel and that the testing vessel has little to no air space to permit inadvertent air stripping of the chemical. It is recommended that a 1 liter wide mouth poly bottle with a hole in the top large enough to accommodate a Gastec 211L tube be provided for each chemical. The Gastec 211L tube will allow for the measurement of the sulfide concentration and for the injection of the chemical through the use of a pipette.
2. Time is also critical to the testing so it is recommended that sampling of dissolved sulfides and ph should be done at pre-determined time intervals.
3. It is also recommended that a set of "control samples" be established before any chemical testing is initiated. Obtain a 5 gallon sample of wastewater in a container filled to over-flowing; cap tightly so as to leave very little air space as possible.
4. Transfer the control wastewater to at least 18 one liter testing bottles in accordance with the quality controls indicated above.
5. Maintain the same wastewater temperature as the drawn samples at all times during the testing.
6. Run tests on the control sample in exactly the same manner as the testing below only without the addition of the chemical.

2.5.6.8.3 Hydrogen Peroxide Testing Procedures

Hydrogen peroxide is a commonly used oxidant that oxidizes H2S into sulfate or elemental sulfur. This is also the chemical that is currently being used by the City for control of the hydrogen sulfide in the City's OCCP system.

1. Carefully transfer the wastewater to a set of six (6) 1 liter testing bottles as indicated above.
2. Measure the hydrogen sulfide concentration in the wastewater in each bottle before adding the chemical.
3. Measure the temperature of the wastewater (°F) in each bottle. It is important to maintain the same temperature throughout the entire testing period.
4. Determine the amount of hydrogen peroxide in the hydrogen peroxide solution. The amount of hydrogen peroxide should be between 50% and 52% H_2O_2 by weight.

5. Add the hydrogen peroxide solution to three (3) of the test bottles.
6. Invert and/or otherwise properly mix to make sure the chemical is thoroughly mixed.
7. Use the Gastec 211L tube to test the hydrogen sulfide at predetermined time intervals. Generally every 30 minutes for six (6) hours.
8. One of the three test bottles should be constantly "agitated" to determine if agitation will release hydrogen sulfide and have an impact on the results while the chemical is present.
9. The three remaining test bottles will be used to monitor how much hydrogen peroxide is required to neutralize an increase in hydrogen sulfide. The laboratory will perform the same basic laboratory set-up as above and then increase the amount of hydrogen sulfide in solution in the wastewater from the base amount to 2 mg/l, 4 mg/l, 6 mg/l and 8 mg/l, respectively. At the same time monitor the amount of hydrogen peroxide that is required to maintain a maximum H_2S concentration of 0.5 mg/l in solution.
10. Off gases (also referred to as headspace gas) should also be collected and monitored for H_2S (in the air).

2.5.6.8.4 Bioxide® (Calcium Nitrate) Testing Procedures

Calcium nitrate, otherwise known as "Bioxide®", removes and prevents hydrogen sulfide generation through a biological process. This chemical will most likely be the most difficult to laboratory test because its actions are "biochemical" and are very dependent on the bacterial culture in the wastewater. Testing for Bioxide® should be performed for a minimum of three (3) full days since a culture of microorganisms is required to obtain accurate test results.

1. Carefully transfer the wastewater to a set of six (6) 1 liter testing bottles as indicated above.
2. Measure the hydrogen sulfide concentration in the wastewater in each bottle before adding the chemical.
3. Measure the temperature of the wastewater (°F) in each bottle. It is important to maintain the same temperature throughout the entire testing period.
4. Add the Calcium Nitrate solution to three (3) of the test bottles.
5. Invert and/or otherwise properly mix to make sure the chemical is thoroughly mixed.
6. Use the Gastec 211L tube to test the hydrogen sulfide at predetermined time intervals.
7. One of the three test bottles should be constantly "agitated" to determine if agitation will release hydrogen sulfide and have an impact on the results while the chemical is present.
8. The three remaining test bottles will be used to monitor how much calcium nitrate is required to neutralize an increase in hydrogen sulfide. The laboratory will perform the same basic laboratory set-up as above and then increase the amount of hydrogen sulfide in solution in the wastewater from the base amount to 2 mg/l, 4 mg/l, 6 mg/l and 8 mg/l, respectively. At the same time monitor the amount of calcium nitrate that is required to maintain a maximum H_2S concentration of 0.5 mg/l in solution.

9. Off gases (also referred to as headspace gas) should also be collected and monitored for H_2S (in the air).
10. It may be necessary to add sodium sulfide to assist in the process. However, the pH should also be monitored so the pH remains between the pre-addition level and 9.

2.5.6.8.5 Thioguard® (Magnesium Hydroxide) Testing Procedures

Thioguard® is a safe alkaline material with a magnesium hydroxide based, non-hazardous chemical. When added to wastewater it raises the pH through a relatively slow controlled release of hydroxyl (OH^-) ions. Raising the pH to about 8.2 is sufficient to achieve a significant reduction in hydrogen sulfide gas emission in high sulfide systems whereby the magnesium hydroxide keeps sulfides in a liquid phase, reducing hydrogen sulfide odors and related sewer corrosion. Magnesium hydroxide is most effective when high levels of dissolved hydrogen sulfide are present. Magnesium hydroxide should be measured to determine the amount of chemical required to be added to 1 million gallons of the wastewater to maintain a pH of 8.2.

1. Carefully transfer the wastewater to a set of six (6) 1 liter testing bottles as indicated above.
2. Measure the hydrogen sulfide concentration in the wastewater in each bottle before adding the chemical.
3. Measure the temperature of the wastewater (°F) in each bottle. It is important to maintain the same temperature throughout the entire testing period.
4. Measure the pH of the wastewater in each bottle.
5. Determine the amount of magnesium hydroxide in the magnesium hydroxide solution. The amount of magnesium hydroxide should be between 60% and 65% by weight.
6. Add the magnesium hydroxide solution to three (3) of the test bottles until the pH in each bottle is 8.2.
7. Invert and/or otherwise properly mix to make sure the chemical is thoroughly mixed.
8. Use the Gastec 211L tube to test the hydrogen sulfide at predetermined time intervals. Generally every 30 minutes for three hours.
9. Measure the pH at these same time intervals.
10. Determine the amount of magnesium hydroxide required to be added to increase the pH to 8.2 and to monitor the pH.
11. One of the three test bottles should be constantly "agitated" to determine if agitation will release hydrogen sulfide and have an impact on the results while the chemical is present.
12. Since magnesium hydroxide should be affective regardless of the concentration of hydrogen sulfide in the wastewater, the remaining test bottles will be used to confirm this assessment. The basic testing set-up should be provided. The laboratory should then increase the amount of hydrogen sulfide in solution in the wastewater from the base amount to 2 mg/l, 4 mg/l, 6 mg/l and 8 mg/l, respectively. At the same time monitor the amount of magnesium hydroxide required to maintain a pH of 8.2.
13. Off gases (also referred to as headspace gas) shall be collected and monitored for H_2S (in the air). Since magnesium hydroxide doesn't remove or eliminate the H_2S in the wastewater, an analysis for residual H_2S in the wastewater is essentially meaningless.
14. Due to the nature of Magnesium Hydroxide, it is fully anticipated that testing for H_2S in the wastewater solution after the addition of magnesium hydroxide will not indicate a reduction

in the volume of dissolved H_2S, but only an increase in pH to 8.3 or higher. However, it must also be understood that this is normal for magnesium hydroxide and from the manufacturers own test data, this pH level indicates that the chemical has reached its highest potential level for controlling hydrogen sulfide from becoming an odor or corrosion control problem.

2.5.6.8.6 Biogon 109 Testing Procedures

{To be completed after chemical information is provided}

2.5.6.8.7 Laboratory Test Data

{To be completed after lab testing.}

2.5.6.8.8 Evaluation of Laboratory Test Data

{To be completed after lab testing.}

2.5.6.8.9 Correlation of Laboratory Test Data with Long Term OCCP Results

{To be completed after lab testing.}

2.5.7 Odor Control System Alternatives

Odors can be prevented by chemical or biological inhabitation as indicated above, but in general most chemical and biological inhabitators will not reduce the odor caused by H_2S to a low enough level that it cannot be detected by the human nose and therefore is objectionable. Containing the foul air within an enclosed area or beneath a cover and treating the foul air with some type of treatment system coupled with the chemical or biological inhabitation will reduce or entirely eliminate odor impacts. Odor control is also an issue for the COW 34 and COW 35 stations. As sewage is held in the wet wells of the pump stations there will be the opportunity for hydrogen sulfide gases and other odorous compounds to escape from solution and create odors in the immediate area. To alleviate this problem an odor control system should be installed to capture the foul air and treat it to acceptable levels. Several systems are currently available to reduce odors at pump stations. They are biofilters, wet tower scrubbers, and carbon adsorption systems.

2.5.7.1 Biofilters

Biofilters consist of a fan blowing foul air through a media of soil or compost. Microorganisms within the media react with the odorous constituents in the air and remove them through a biological process. Biofilters have been used successfully for treatment of foul air in many instances but typically require a steady stream of foul air and a highly controlled humidity (+/- 98%) to sustain the growth of the microorganisms. It is anticipated that very low levels of foul air will be generated at either of the pump stations during the colder winter months with the addition of a liquid phase chemical that precipitates H_2S. The lack of foul air (food for microorganisms) would cause the biofilter to "die". Therefore, the biofilter is not viewed as a viable alternative.

2.5.7.2 Wet Tower Scrubber System

The wet packed tower scrubber is a proven technology as it applies to odor control at sewage pump stations and wastewater treatment plants. Thousands of wet packed tower scrubbers have been installed worldwide and they perform exceptionally well when operated and maintained properly. The basic principle of the scrubber is to draw foul air through a hollow vessel with a packing media that creates a significant amount of liquid to vapor interchange and where pH adjusted water is contacted with the foul air. The pH of the liquid causes hydrogen sulfide to be stripped from the air and put into solution leaving non-odorous air to exit the vessel. Most wet packed tower scrubbers are either single stage or two stage systems. The primary stage introduces NaOH to strip the hydrogen sulfide and then in the second stage (in a two stage system) adds sodium hypochlorite to complete the removal process. Recently there has been a chemical developed that will perform the function of the two stage system in a single stage system. Periodically the hydrogen sulfide is pumped back into the pump station wet well. Some of the advantages and disadvantages of the scrubber system are listed below.

Advantages

- Proven technology
- High removal efficiency
- Can handle fluctuations in loadings

Disadvantages

- Mechanically intensive; multiple pumps and tanks
- Multiple chemicals to handle and store (CERCLA)
- High maintenance requirements including cleaning of calcium buildup on packing material
- Complex operation compared to other odor control systems

2.5.7.3 Carbon Adsorption System

Carbon adsorption systems are a once through system. Foul air is drawn from the wet well by a fan and passes through a densely packed bed of activated carbon media. Foul smelling compounds such as hydrogen sulfide are adsorbed onto the media allowing the non-odorous air to be exhausted from the system. Removal efficiencies for carbon adsorption systems are typically 99% and above and unlike the scrubber odorous compounds are not reintroduced into the pump station wet well, but are held in the carbon media. Once the media is used up it must be replaced to continue to remove odorous compounds. The replacement of media constitutes the majority of the maintenance required. Some of the advantages and disadvantages of the carbon adsorption system are listed below.

Advantages

- Low maintenance requirements, less labor required per week than scrubber
- No chemicals required (no tanks or feed pumps to maintain)
- Small area required for installation as compared to a wet scrubber
- Removes other odorous compounds in addition to hydrogen sulfide

Disadvantages

- At higher hydrogen sulfide concentrations the cost of the carbon becomes excessive
- Media can adsorb carbon dioxide in addition to odorous compounds which will also us up the carbon.

2.5.7.4 Recommendations for laboratory testing

The only viable options identified in this report for reducing odor in the vapor phase to undetectable levels (0.1 – 1.0 ppm) are carbon adsorption and wet packed tower scrubbing. Both systems work very well with the removal of H_2S in the concentration ranges indicated in Table TM 2.3. However, in the event of much higher concentrations of H_2S, or intermittent spikes in H_2S, the wet scrubber generally performs the best with the least amount of product loss. Activated carbon adsorption systems will lose capacity very rapidly under this scenario.

Air and liquid sampling at COW PS 34 indicates H_2S concentrations ranging from 14 ppm to 45 ppm are occurring under the current OCCP system. It is anticipated that with modifications to the influent piping at this pump station to reduce the headloss in the incoming system, and the addition of a more reliable chemical to control H_2S in the liquid phase, that changing the current system from a carbon adsorption system to a wet tower odor scrubber system may not be viable. Particularly since the infrastructure and the costs associated with the installation of the current infrastructure for the activated carbon air scrubber system is already in place and working. Taking this into account, it is recommended that the carbon adsorption system continued to be considered due to its low maintenance requirements and competitive present worth at low hydrogen sulfide levels.

Since the existing vapor phase system is already a carbon adsorption system, it is recommended to continue to use the current system and focus primarily on viable changes in the liquid phase system. If the liquid phase system is properly balanced by an appropriate chemical addition, and areas in the force main system that cause large head-losses which in-turn generate high point concentrations of hydrogen sulfide are corrected, it would stand to reason that there will also be a reduction in the consumption of the carbon that is only adsorbed in direct relationship to the amount of hydrogen sulfide in the vapor phase of the system. It is therefore recommended that the City continue with the Activated Carbon System, though possibly convert to a higher capacity activated carbon media.

2.5.8 Recommendations for Proof Testing

After the laboratory testing is completed and the City has a good evaluation of the viability of each chemical, it is recommended that an actual "pilot test" be performed to confirm the information obtained in the laboratory. The current OCCP Contract with the indicated recommended changes would serve as a suitable tool for establishing the guidelines for this testing. Obviously, since hydrogen peroxide has been used for many years it is not envisioned that pilot testing of hydrogen peroxide is warranted. Additionally, Thioguard recently went through an extensive pilot test for the City on the previous OCCP Contract proposal and that data is adequate to make a reasonable assessment of its performance. Therefore it is recommended that pilot testing be performed on the Bioxide.

2.6 Recommendations for OCCP Bid Package and Contract

{To be completed after the lab testing}

2.7 Conclusions and Recommendations

{To be completed after the lab testing}

3 Hydraulically Induced Corrosion

Within the Northeast Interceptor system, areas of suspected hydraulically induced corrosion due to turbulence have been identified and investigated. Based on drawing reviews and field reconnaissance, two primary areas of concern were noted. The New Hanover County junction box, directly upstream of Pump Station (PS) 35 and adjacent to Bradley Creek, was noted to be subject to extreme corrosion and odor. Also, the gravity section of the 20" force main leading into Pump Station (PS) 34 was noted to be subject to substantial hydraulic turbulence. These areas have been exposed to turbulence and high velocities leading to deterioration of the structures and nuisance odors. The followings sections address the turbulence issues at both locations and proposed solutions.

3.1 PS 35 Influent Junction Box

Flows from NHC sewers tributary to PS 35 are combined outside the site fence in an existing 7'x 7' concrete junction box shown below.

View of Junction box at PS 35

The approximately 17' (measured top to invert) deep structure includes a 30"x 30" aluminum hatch and a PVC vent stack. The junction box is connected to the pump station's carbon adsorption system via an 8" PVC ventilation duct in an effort to minimize odor. Four active influent sewers were observed to converge within the structure as depicted in Figure TM 2.3.

These include a 16" New Hanover County force main (Westwood Pump Station #77) on the northeast side with an approximate invert elevation 2.5' above the structure invert, a 10" New Hanover County force main (Wrightsville Sound Pump Station #57) on the northeast side with an approximate invert elevation 2.5' above the structure invert, an 8" New Hanover County gravity sewer on the east corner with an approximate invert elevation 1' above the structure invert, and a 24" gravity sewer (from Windemere/Seagate) that enters the structure from the northwest side with an approximate invert elevation 0.5 feet above the structure invert. Additionally, an apparently abandoned 8" PVC line was observed approximately 8' above the structure invert in the southern corner of the junction box. The flow exits the structure via a 24" gravity main directly tributary to the PS 35 screening chamber. Flows from Wrightsville Beach are transferred to PS 35 via a gravity sewer connection between the NHC junction box and the pump station wetwell.

The structure has apparently been subjected to a highly corrosive environment for some time and has undergone rehabilitation in the past consisting of "shotcrete" and sprayed on lining in an effort to avoid further structural degradation and to provide some repair to past damage. The past repairs have now begun to fail as the applied coating has begun peeling away from the structure walls. The turbulent nature of the force main discharges, characterized by the approximate 2.5' free-fall drops, has likely resulted in the release of substantial hydrogen sulfide gas. The released gas accounts for the nuisance odors observed as well as the production of sulfuric acid which has led to degradation of the concrete structure.

View looking down in Junction Box outside PS 35

3.2 Recommended Corrective Measures at PS 35 Junction Box

Due to the turbulent, deteriorated condition of the existing junction box and the failing repairs, it is recommended that this structure be replaced with a larger junction box that revises the horizontal and vertical layout to eliminate or minimize the turbulent conditions. This will minimize the liberation of hydrogen sulfide, reducing odors and minimizing the oxidation to sulfuric acid, which in turn will minimize future corrosion and deterioration and provide a more lengthy useful life. This should be accomplished by aligning the crowns of the influent pipes with the outlet pipe and constructing flow channels for each of the tributary sewers that smoothly slope the junction box invert between the influent gravity and force mains and the out-flowing gravity sewer.

Due to the necessity to keep the system operable almost continuously and the absence of redundancy in the influent configuration of the existing junction box, it will be difficult to remove the existing structure and replace it in place. It is therefore proposed that the existing system be kept operable by installing a new pre-cast concrete manhole between the existing junction box and the site fencing for PS 35, while the 24" out-flowing sewer is plugged and the existing junction box is utilized for bypass pumping to PS 35. This will allow installation of influent pipes and completion of the new junction box without interference from existing sewers and sewer flows. Once the box is complete, each individual sewer can be shut down briefly while final connections are made to the new structure. Figures TM 2.4 and TM 2.5 provide a schematic illustration of these concepts.

As part of the redesign, the 24-inch gravity sewer from the junction box to COW PS 35 should be evaluated to determine if there is adequate capacity to carry projected peak flows from all influent sewers. With a 24-inch gravity sewer, a 16-inch force main, a 10-inch force main, and an 8-inch gravity sewer tributary to this structure, it is anticipated that little if any additional capacity remains for additional flows.

3.3 PS 34 Tributary NEI Gravity Sewer and Influent Configurations

Flows from PS 35 are transported to PS 34 via a 20" ductile iron force main that discharges to a 20" gravity sewer near the entrance to Oakmont Apartments along Greenville Loop Road This gravity sewer is directly tributary to PS 34. Velocities of the gravity sewer were modeled to range from 4.7 fps to 5.8 fps. See Figures TM 2.6 and TM 2.7 for the profile and the modeled hydraulic grade lines at average daily flow and the reported peak flow. These velocities are within industry standard acceptable range of less than 10 fps. However, when observed in the field, the velocities of the sewage in the drop manholes (MH A, MH B, and MH C) appeared to be in excess of these modeled values due to the drops in these manholes. As a result, these manholes appear to have been subjected to turbulence induced erosion and corrosion. In the past, this corrosion has degraded the concrete manholes to the point that HDPE inserts were installed to provide necessary structural integrity. It should also be noted that the 20" gravity sewer receiving the 20" force main discharge was modeled to nearly surcharge at the COW PS 35 design maximum flow. In order to avoid a possible surcharge situation, the gravity section near PS 34 should be installed as a larger diameter pipe.

View of MH A along Pine Grove at PS 34

This gravity line was originally designed and installed with four abrupt alignment turns and three 4' drops immediately prior to entering the PS 34 site. These turns, coupled with the elevation changes, have historically been a source of odor and concrete degradation within the structures. The turbulent nature of the discharges, characterized by the approximate 4-foot free-fall drops, has likely resulted in the release of substantial hydrogen sulfide gas. The released gas accounts for the nuisance odors observed as well as the production of sulfuric acid which has led to degradation of the concrete structures. Plastic manhole inserts have been installed in MH B and MH C as repairs for significant concrete loss in the structures. According to City personnel, the walls of these manholes had been severely degraded as a result of the turbulence of the flows and the release of hydrogen-sulfide gas. These manholes were observed to have high velocities and exhibit a very turbulent jetting action that greatly accelerates the degradation of the manholes and liberates hydrogen-sulfide gas.

View of drop manhole (Manhole B) adjacent to PS 34 driveway along Pine Grove.

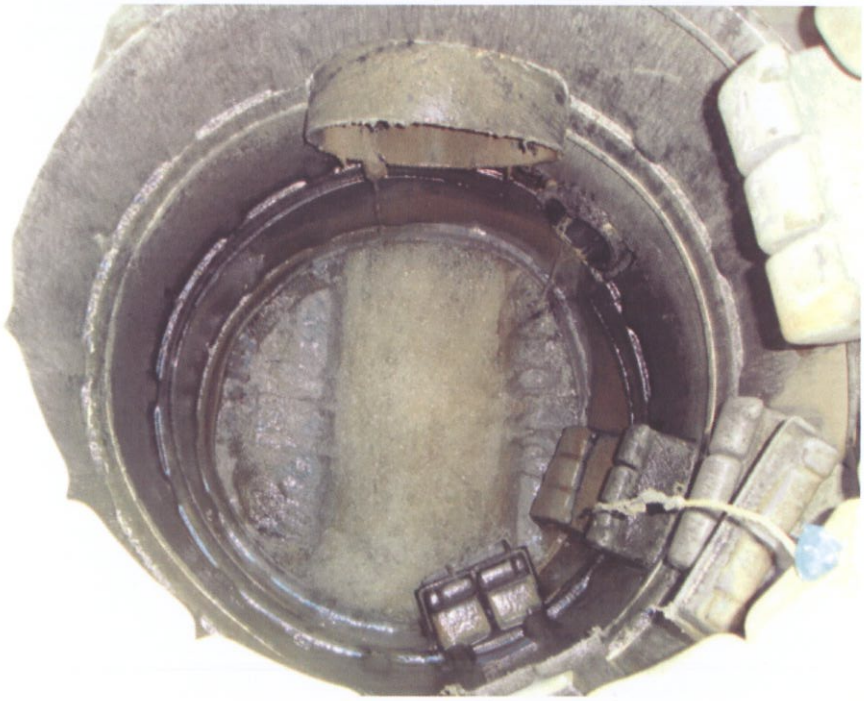

View of "jetting" velocity in drop manhole (MH B) at PS 34 driveway.

View looking at MH C from Pine Grove upstream of NEI alignment between Oakmont and the Scotchman

View of turbulence/jetting in 90° turn at drop manhole C along Pine Grove behind the Scotchman.

View of flow backing up in MH C

View of MH D and the NEI easement looking upstream toward MH E on Greenville Loop Road from Oakmont - note the proximity to the dwellings and drip line of the large oak tree to the left.

View of MH D in Oakmont – Degradation of concrete along the walls due to gas release

Existing manhole D within Oakmont provides a 60° turn. This change of direction, coupled with the velocity of the flow has released hydrogen-sulfide gas, generating odor and resulting in concrete degradation of the unlined manhole as seen above.

Upon field investigation and interviews with City personnel, it appears that the flow has been altered to bypass manhole E at the Oakmont driveway. The flow to this manhole was redirected to make this approximate 90° turn via two 45° bends in lieu of flowing through the manhole. A new manhole was also cut in just upstream of this location as a point of entry for future rehabilitation procedures.

View of NEI gravity section along Greenville Loop Road at Oakmont. The green manhole in the foreground is the new cut in manhole. The two fittings were added to bypass manhole E located at the culvert in the background

3.4 Recommended Corrective Measures at PS 34 and NEI Gravity Section

3.4.1 Rehabilitation or Replacement of NEI Gravity Section

Review of the recent CCTV inspection of the gravity section of the NEI near Greenville Loop and Pine Grove revealed an abundance of grease build up, the presence of root intrusion, infiltration, and evidence of corrosion along the crown of the pipeline. Given the poor condition, multiple 4' drops and directional turns, it is recommended that this gravity section be redesigned as either a force main or a gravity sewer with constant grade and no drops to minimize turbulence and/or enhance the pipeline integrity. Several alternatives for replacement or retrofit are available as depicted in Figure TM 2.8 and described in the following sections.

3.4.2 Replacement within the existing easement

With the existing gravity section residing in a 15' easement within Oakmont Apartments adjacent to an existing convenience store, it will be difficult and impractical to install and maintain the proposed force main or new gravity line within the existing easement. This scenario is further complicated by the proximity of a large oak tree and dwellings in Oakmont that are adjacent to the existing easement. (See picture at manhole D above.)

3.4.2.1 Replacement with a Directional Drill

Due to the easement constraints, a more evasive installation method than typical trenching is recommended within Oakmont. Directional drilling a new line from Greenville Loop Road to Pine Grove within an additional easement would minimize the disturbance and have the least possibility of damaging existing structures and the large oak tree. While this alternative would resolve problems with the existing sewer within Oakmont, it would still entail the replacement or rehabilitation of the gravity sewer along Pine Grove from drop manhole A to drop manhole C. Without the elimination of the drop manholes, the turbulence being generated would continue to pose problems with the continued release of H_2S gas resulting in further corrosion and deterioration. The opinion of probable construction cost for this alternative is $340,000. A cost breakdown is provided in Appendix F.

3.4.2.2 Replacement with a New Relocated Force Main

Alternatively, traditional excavate and backfill installation techniques could be used to route the proposed force main around the Scotchman convenience store within and/or adjacent to the right of way of Pine Grove and Greenville Loop Roads. This new force main could be installed as a traditional force main including an appropriately sized air/vacuum valve. Such a configuration would allow for a more shallow installation until the line approaches COW PS 34. Near COW PS 34, the depth of the pipeline would be gradually increased to allow for a smooth combination of flows within manhole A by "matching crowns." The opinion of probable construction cost for this alternative is $346,000. A cost breakdown is provided in Appendix F.

3.4.2.3 Relocation and Replacement with a New Gravity Section

Given the easement restraints, proximity to dwellings, and large oak tree in the vicinity, the existing easement is not viewed as a viable alternative for installation of a new gravity sewer. The 15-foot corridor would be problematic and impractical for installing the new line while maintaining flow on the existing line, as well as for long term maintenance. Accordingly, a new route would be necessary for a gravity sewer alternative. The most likely route would follow the Greenville Loop and Pine Grove right of ways adjacent to the Scotchman property. This alternative is not considered viable due to the increase in cost relative to the force main option.

3.4.2.4 Rehabilitation of the Existing 20-Inch Gravity Sewer

Another alternative is to utilize trenchless rehabilitation methods to line the gravity section between MH E along Greenville Loop and MH C along Pine Grove. Cured in place lining (CIPP) would eliminate the infiltration and root intrusion problems as well as provide structural integrity. However, the less than desirable drop situations at MH A, MH B, and MH C would not change and therefore still be problematic. This alternative would also include clearing of the existing easement to prevent future root intrusion which could be problematic due to the existing structures and vegetation. This alternative will likely be met with resistance due to the proximity to existing residences. The opinion of probable construction cost for this alternative is $214,000. A cost breakdown is provided in Appendix F.

View of possible route for new force main or gravity section along Greenville Loop Road at the Scotchman

View of possible route for new force main or gravity section along Pine Grove at the Scotchman

3.4.3 Replacement of the Influent Junction Manhole (MH A)

Flows from the NEI combine with several other sewers at MH A between COW PS 34 and Pine Grove Drive. The existing inlet configuration of PS 34 incorporates the flow from PS 35 as well as an 18" City gravity sewer and a 10" New Hanover County (NHC) force main from PS 32 (Milbrook). MH A also has an approximate 4-foot drop in the flow path of the 20-inch NEI force main. The NHC force main discharges to a vault located inside the gate of the PS 34 site with an approximate freeboard of 1-2' to the top of the structure. The 18" gravity sewer crosses Pine Grove Road from the southwest and converges with the PS 35 discharge, as well as the effluent from the county vault, in MH A outside of the site fencing as indicated in Figure TM 2.9.

Due to the turbulent, deteriorated condition of the existing structure, and the 4-foot NEI flow drop, it is recommended that MH A be replaced with a larger structure that revises the horizontal and vertical layout to eliminate or minimize the turbulent conditions. This will minimize the liberation of hydrogen sulfide, reducing odors and minimizing the oxidation to sulfuric acid, which in turn will minimize future corrosion and deterioration and provide a more lengthy useful life. This should be accomplished by aligning the crowns of the influent pipes with the outlet pipe and constructing flow channels for each of the tributary sewers that smoothly slope the junction box invert between the influent gravity and force mains and the out-flowing gravity sewer.

Due the necessity to keep the system operable almost continuously and the absence of redundancy in the influent configuration of the existing junction box, it will be difficult to remove the existing structure and replace it in place. It is therefore recommended that the existing system be kept operable by installing a new pre-cast concrete manhole between the existing junction box and the site fencing for PS 33, while the 24" out-flowing sewer is plugged and the existing junction box is utilized for bypass pumping to PS 34. This will allow installation of influent pipes and completion of the new junction box without interference from existing sewers and sewer flows. Once the box is complete, each individual sewer can be shut down briefly while final connections are made to the new structure. Figures TM 2.10 through TM 2.11 provide a schematic illustration of these concepts.

The construction of such a structure would also eliminate the existing NHC vault and replace some of the existing manholes that have been subject to significant corrosion as a result of turbulence. Additionally, the top of this structure could be set higher to help avoid future overflows. Such a configuration would help reduce odor emissions and reduce a great deal of turbulence and subsequent concrete erosion.

As part of the redesign, the 24-inch gravity sewer from the junction box to COW PS 34 should be evaluated to determine if there is adequate capacity to carry projected peak flows from all influent sewers. With a 18-inch gravity sewer and a 10-inch force main tributary to this structure, it is anticipated that little if any additional capacity remains for additional flows.

4 Air Release Valve Condition and Operation and Maintenance Evaluation

Both water and wastewater contain air that has been entrained as tiny bubbles. Entrained air can range from as little as 2% to potentially as much as 7%. This entrained air is released into the entire length of force main or water main during normal operations of the system. In wastewater, where there is the presence of hydrogen sulfide (H_2S), the entrained air has the potential to be released as H_2S gas. The actual amount of entrained air that is released as H_2S gas is directly related to the volume of the fluid (Q) being pumped, the head-losses created within the pumping system, and the duration that the wastewater stays in the force main. H_2S gas is released from solution when there are changes in both pressure and velocity within a force main and where long detention times result from low flow situations. This can be further exacerbated if air that was trapped in the force main before the pipe was filled was not thoroughly exhausted during normal pumping operations. Cases of trapped air within pipelines can also account for "burping" or discharge in the form uneven flow patterns or "slugs" of water. The uneven or "burping" flows within a sewer force main can release more H_2S gas as turbulence is generated. Also, additional air is very commonly introduced into a force main by improperly designed pump stations which permit air or even create air to be drawn into the force main through the suction bell by a vortexing action in the wet-well.

Not only does this entrained air have the potential to be highly corrosive and result in deteriorated pipe, it also directly affects the hydraulic performance of the force main and therefore the pump station. Air continually comes out of solution and is released into the force main and accumulates in pockets at the high points in the force main system. It has been well documented that flow capacities in a force main can easily be reduced by 5%-10% due to even a small pocket of gas build up. This not only creates a potentially highly corrosive pocket of hydrogen sulfide gas, but also reduces the efficiency of the pumping system, robbing the system of potential capacity and at the same time increasing the overall energy costs associated with the pumping system. Even a small loss of efficiency has the potential to have significant financial implications.

It is good engineering practice, as well as a requirement by the North Carolina Department of Environment and Natural Resources (NCDENR), to install air/vacuum release valves at the high points in force mains to eliminate the generation of these pockets of air. Air/vacuum release valves are the most common piece of equipment to perform this operation automatically. They are manufactured by several reputable manufacturers such as Crispin Manufacturing and GA Industries, Inc., and are very simple in their design, construction and function. They will also more than pay for them selves in the overall cost savings by providing both maximum flow capacity and higher operating efficiencies of the system.

Air/vacuum release valves have three primary and yet critical functions. Function one is to permit the large volumes of air in a force main to be automatically released or exhausted through a properly sized orifice as the incoming fluid fills the force main. This is the larger "air release valve". Once the force main is full, liquid rises into the valve and raises a float which closes the valve. This stops the flow out of the valve so the fluids are not released from the valve.

The second function is to vent the entrained air that is continually released into the fluid. A mechanism is necessary for releasing this entrained air once the large air release valve is closed. This operation is commonly performed by a "pressure air release" valve. The pressure air release is much smaller in size and incorporates a small orifice with the same principal design as the larger air release valve, only it operates while the system is under operating pressure. The design of the pressure air release allows the valve to continually vent the small accumulations of air that are released during pumping operations. This operation permits the force main to remain entirely full, providing full capacity.

The third function of the air/vacuum valve is to permit air back into the force main when the system is not in operation. This is important for several reasons. In areas where the force main has a significant slope, there can be enough hydraulic gradient that a major leak or rupture in the force main could cause the pipe to go under a high vacuum, that could collapse the pipe. The air/vacuum valve allows air to enter the force main to break this vacuum. Secondly, the column of water within the pipe will naturally want to separate at high points of the force main when flow is stopped as water on the downslope side continues to move forward. If air is permitted to enter the force main during this occurrence, the two columns of water will separate properly at the high points under a controlled vacuum. If air is not re-introduced into the force main at the high points, the two columns of water will try to separate, resulting in negative pressures which cause liquid to evaporate and form a vapor pocket. A large enough pocket can cause an improper separation of the water column. Once the system pressure rises back above zero, the vapor pocket will dissipate and collapse allowing the water columns to collide as they rejoin. The rejoining of the water column can cause large pressure surges which travel throughout the system that could potentially rupture the force main, particularly an older force main that may have already been subjected to long term corrosion and is in a deteriorated state.

Since entrained air is continually released into a force main along its alignment, consideration should be given to installing valves in locations other than high points. These locations include increased down slopes, long ascent or decent without a summit, abrupt changes in the slope and long horizontal runs. Due to capital costs and the increased operation and maintenance, most engineers and municipalities view this as an unnecessary precaution for their system and these air release valves are often eliminated.

4.1 Evaluation of Condition, Functionality, and Sizing of Existing Valves

The existing ARV assemblies on the NEI system were located in the field and used as initial test sites for the pipeline ultrasonic thickness testing. Each ARV vault and assembly was observed with the condition and other pertinent data being documented. Construction of the ARVs was consistent with the exception of one which had been replaced. ARV vault numbers 1, 2, 3, 5, 6, 8, 9, 10, 11 and 12 were observed to be 8-inch concrete masonry unit (CMU) box structures built on a poured slab with a precast top. ARV #4 has been replaced with a 4' diameter concrete manhole. ARV #7 has been removed.

The air release valve assemblies consist of a DIP MJ in-line tee with the branch of the tee containing a 2-inch tapped cap with a 2-inch gate valve leading to an air release valve. The valve manufacturer information was not discernable on most units due to the external corrosion, though we were able to

identify one as a Val-Matic Model #48-150 PSI. All air release valves, with the exception of one that has been replaced in ARV#1, appear to be the Val-Matic Model #48.

Site observations include the following:

- All but one vault (ARV #11) appear to be structurally sound. One wall in ARV #11 is leaning inward and will be repaired as part of the Deficiency Identification and Repair Program (DIRP).
- ARV vault and assembly #4 is severely corroded and in need of complete replacement.
- Five (5) vaults have been covered, apparently as part of construction in and adjacent to the right of way, and need to be raised to grade.
- As is typical for most ARV vaults, groundwater is a problem. Groundwater was present at the time of observation in 7 of the 11 vaults ranging from approximately 3" to 4'.
- The condition of the original air release valves is poor to extremely poor due to corrosion which is severe for approximately half of the valves. Most of the valves appeared to be inoperable due to corrosion and/or plugging. Due to the corroded condition of the valves, it was determined that tampering with the assembly could result in failure, likely causing a discharge of wastewater into the vault. Therefore the functionality of the valves were not investigated further.
- ARV devices were installed to vent directly into the valve vault rather than outside the vault. This has apparently led to significant external corrosion.

Specific information on each ARV vault, along with pictures, is provided in the ARV Data Sheets in Appendix G. A summary table is provided as well.

4.2 Current Operation and Maintenance Procedures

As is typical for a large number of wastewater collection systems, current operation and maintenance has been to respond to problems at these devices if and when they occur. Due to the typical conditions of air release valve assemblies as indicated above, maintenance of these facilities is a dirty, potentially hazardous job. As a result, little to no maintenance is frequently the case in a number of wastewater systems.

4.3 Air Release Valve Operation and Maintenance Program

One of the most common responses we hear from municipal maintenance staffs is that the "air/vacuum release valves don't work, so we just shut them off." From the above information, it is easy to understand why this shouldn't be done, although it all too often it is. In order to minimize the buildup of hydrogen sulfide gas and the associated corrosion that comes with it, provide both maximum flow capacity and higher operating efficiencies, and extend the life of the existing and future facilities, it is recommended that an Air Release Valve Operation and Maintenance Plan be implemented and strictly adhered to.

While maintenance procedures for the ARV assemblies will vary depending on the style of the valves selected as well as the materials of construction, there are a number of procedures common to all valves. These procedures should be supplemented with specific manufacturer recommended procedures for the style of valve selected. The key aspect for ARV maintenance irrespective of the manufacturer is regular inspection.

The following is a recommended plan for Air Release Valve Operation and Maintenance:

City of Wilmington, Northeast Interceptor System ARV Operation and Maintenance Program

Periodic Maintenance (Twice a year)

The following tasks should be performed in accordance with the manufacturer's recommendations and as a minimum, twice a year. If chronic problems persist, the frequency should be increased and the facilities modified.

ARV vault

1. Locate the vault to ensure that it has not been covered by construction in the vicinity.
2. Inspect the exterior of the vault including the ring and covers or hatches for any stress or indication of damage.
3. Dewater (if necessary), clean, and visually inspect the interior of vault for structural soundness, corrosion, or damage.
4. If the vault contains a wet and dry side, vacuum out any "blow-by" of sewage that has collected in the wet side. Clean the wet side to minimize odors and to allow for inspection as on the dry side. Increase cleanout and inspection if the sewage is building up to the point that a discharge could occur. If significant sewage is collecting in the wet side (greater than one third the volume), notify the City Utility Services Director and the design engineer and increase frequency of inspection.

Air release valve

1. Clean and inspect the exterior of the valve and assembly for corrosion, damage, or leakage, in particular around the seating areas.
2. ***Close the isolation valve at the base of the air release valve.***
3. Open the bottom blow-off valve. If the valve is functioning properly, the sewer system pressure will rapidly blow-off some of the fluid and solids as the valve is opened. If there is rapid blow-off, proceed to step 4 below. ***If there is little or no blow-off of pressure, the valve is not functioning properly.*** If this is the case, ***close the bottom blow-off valve***, reopen the isolation valve to make sure it wasn't closed initially, ***close the isolation valve***, reopen the bottom blow-off valve and observe for blow-off of pressure. ***If there is still little to no blow-off of pressure, proceed to step 1 of the comprehensive periodic maintenance section below***.
4. Back flush the valve in accordance with manufacturer recommendations.
5. Perform additional procedures as recommended by the valve manufacturer.
6. ***Close the bottom blow-off valve.***
7. ***Open the isolation valve at the base of the air release valve. **The valve will not function if the isolation valve is not opened.***

Comprehensive Periodic Maintenance (Annually)

In addition to the periodic maintenance tasks, the following tasks should be performed in accordance with the manufacturer's recommendations and as a minimum, once a year. If chronic problems persist, the frequency should be increased and the facilities modified.

Air release valve

1. ***Close the isolation valve at the base of the air release valve.*** Remove the valve and replace it with a like valve from storage. ***Open the isolation valve at the bottom of the air release valve that has just been installed. Allow time for the system to pressurize the valve. Close the isolation valve and open the bottom blow-off valve.*** If the valve is functioning properly, the sewer system pressure will rapidly blow-off some of the fluid and solids as the valve is opened. ***If there is a rapid blow-off of pressure, close the bottom blow-off valve, open the isolation valve, vacate the vault, and proceed to step 2. If there is little to no blow-off of pressure, the valve is not functioning properly. Remove the valve and replace with another one from storage.*** Repeat this procedure until a properly working valve has been installed.

   **** Be certain that the replacement valve is identical to the valve being replaced, in particular the orifice sizes. Valves are designed with specific orifice sizes to minimize surge pressures within the system. Replacement of a valve with an incorrectly sized orifice can dramatically increase surge pressures, potentially resulting in damage and or failure of the force main system components.***

2. Take the removed valve to facilities set up to dismantle, clean, inspect, and reassemble the valves. Dismantle and clean the interior and exterior of the valve and all components. The valve assembly should be dismantled such that the float, sealing mechanisms, and gaskets can be inspected for wear or failure and replaced as necessary. Reassemble the valve. Insure that there is at least one of every type of valve in the system assembled in storage at all times. Clean, repair and reassemble valves soon after removal to return to two spare valves as soon as possible. (The traditional cast iron devices containing ball style floats and arms are more labor intensive to dismantle and maintain than the newer plastic and stainless steel units with flap style gaskets and simple floats. Many of the newer stainless steel or plastic units are dismantled by as few one to four bolts and also offer the added benefit of resistance to corrosion.)

3. Perform additional procedures as recommended by the valve manufacturer.

Spare Parts

Keep on hand in storage at all times at least the following:

1. Two (2) of every type of valve in the system.
2. Two (2) of every type of every other component in the system including tapped blind flanges, ball corporation stops, and all couplings or fittings.
3. Two (2) of every type of back flushing apparatus.
4. Two (2) of any other spare parts as recommended by the air release valve manufacturer.

4.4 Conclusions and Recommendations

Our extensive experience with the design and construction of large pump stations and force mains has led us to discover that most municipalities don't maintain their air/vacuum release valves because they are either inconvenient to access, or are located in a single vault or manhole that is very "nasty" for maintenance personnel to enter. In addition, the older design of air/vacuum release valve manholes, that simply placed a hole in the base (if there was a base) filled with stone below the manhole, are now being considered a source of wastewater discharge (an SSO), even in small amounts. This is also a location where ground water can easily infiltrate the air/vacuum manhole and either make it very difficult to maintain or render it totally inoperable.

Kimley-Horn has developed a new approach to the air/vacuum release valve maintenance problem by designing a dual compartment structure (see Figure TM 2.12) with an integral dry side and a wet side. This unique design permits maintenance workers to access the mechanical area of the air/vacuum release valve without unnecessarily having to come in contact with the sewage. The wet side is designed to permit the easy wash down and removal of any "blow-by" of the sewage or back-flushing water by the use of a vacuum truck, which almost every municipality already has. The design provides for a contained wet side so there is a highly reduce potential for an SSO.

We recommend that this type of assembly be installed on all new force main systems to encourage rather than discourage maintenance, allow for easier maintenance, keep structures cleaner, eliminate groundwater, and minimize the potential for an SSO. We also recommend that this type of assembly replace existing assemblies as necessary to avoid the above noted conditions.

Due to the corrosive nature of the environment in which these devices are installed, whether installing new assemblies, or replacing or retrofitting existing assemblies, we also recommend considering the more corrosive resistant materials such as stainless steel and plastic.

For the NEI System, the following specific actions are recommended as part of the DIRP to address immediate needs. These improvements are acceptable for an interim period of up to 2-3 years until the system is completely rehabilitated or expanded.

- Implement and strictly adhere to an ARV Operation and Maintenance Program including the ARV O&M log as provided above.
- Replace all air release valves with combination air/vacuum pressure release valves in accordance with the recommendations of the surge analysis.
- Replace the tapped blind flange, nipple, and gate valve assembly with a new 2-inch tapped flange, a 300 psi ball corporation stop, and coupling.
- Raise any vaults that are below grade to grade.
- Install a 6-inch PVC vent to the right of way line on all vaults.
- Consider either replacing the access ring and covers with aluminum 3'x3' single leaf or 4'x4' double leaf H-20 rated hatches or replace the tops with precast tops with aluminum hatches for easier access and maintenance.
- Replace existing ARV#4 with the detail in Figure TM 2.12 below.
- Replace the 8-inch CMU wall that is collapsing in ARV#11.

In lieu of the preceding recommendations, the City could proceed with the following long term actions which are recommended to extend the useful life of the NEI system:

- Replace all existing ARV structure/assemblies with the detail in Figure 2.12 below.
- Implement the recommendations of the surge model analysis.
- Strictly adhere to the Operation and Maintenance Program implemented as part of the interim recommendations.

Without functioning air release valves, performance and long term reliability of a wastewater force main system can be compromised. The expulsion of trapped air and gases is essential to maintaining pipeline integrity and providing both maximum flow capacity and higher operating efficiencies of the system. No matter the style of valve selected or configuration installed, adherence to a regular operation and maintenance regimen is essential to insuring proper performance and reliability of the system.

5 Evaluation of Daily Pump Station Data Collection and Trending

Review of the current City daily pump station data form indicates that many of the typical parameters necessary for daily maintenance activities are already being tracked. Between this data, and the data recorded by the SCADA system, a fairly comprehensive performance and maintenance history can be generated for the respective pump stations. The existing form is included as Appendix H.

5.1 Recommended Additions or Modifications

We recommend the following additions or modifications to the Daily Pump Station Maintenance Log:

- Incorporate entries for pump run time and discharge pressure readings (add discharge pressure gages to all pump discharges. Such information recorded in the field will be beneficial to compare with SCADA recorded data.
- Provide entry for a "smell test" to help correlate odor patterns. Such data may be useful to qualitatively track odor control process success. This will particularly help with PS 35 and its proximity to heavily traveled Oleander Drive. It may beneficial to also include an item to make sure dumpsters are monitored for being covered as well as ensuring they are not overflowing or "debris" is not missing the receptacle.
- Include an entry for visual indications of high water or possible overflows either in yard manholes or screening chamber (i.e. high water marks or debris).
- The references to checking the grit removal equipment should be taken off of the checklist as this equipment is no longer in use.

6 SCADA System Monitoring and Control Evaluation

Review of the existing SCADA system capabilities indicates that the City has the ability to monitor and record a great deal of information from COW PS #34 and #35. The current system monitors approximately 150 tags or items such as pumps, ventilation fans, and generators. Such information is

a valuable tool for ensuring reliability of the system and allows for "real time" monitoring. A typical screen shot and list of pump station monitored data for both PS 34 and PS 35 is included in Appendix I.

6.1 Recommended Additions or Modifications

We recommend the following additions or modifications to the SCADA monitoring system:

- Incorporate pressure gauge readings into the routine monitoring display items.
- Add monitoring item for the station's respective proposed flow meters. These reading will prove invaluable to gauge the efficiency of pumps as well immediately alert operators of anomalies.
- Perhaps a normal operating "flow envelope" could be developed from a diurnal curve tailored to the system. Such a curve could serve as a baseline for comparison to any flow conditions encountered. Should anything outside the areas of normal operation occur, a notice would be generated within the monitoring system to trigger more scrutiny by operators.

Along with these added parameters the other currently monitored item should be verified that they are working properly and recording information as necessary to help with any trending. Such items as pump run times, ventilation fan run times, and pump power draws should be recorded.

7 Easement Maintenance and Management

7.1 Existing Conditions

The City of Wilmington has the responsibility to provide reliable water and sewer service to all of its customers. The City also has the responsibility to provide these services in a manner that is environmentally responsible and ensures regulatory compliance. An important part of keeping water and sewer service reliable, environmentally responsible, and within regulatory compliance, is maintaining and managing sewer collection and water distribution easements. Proper maintenance and management will prevent damage to those facilities from trees and other vegetation, structures, and other utilities which could result in service interruptions, environmental degradation, or noncompliance with regulatory requirements. Such occurrences can be inconvenient, costly to their customers, and may disrupt vital services. For this reason, the City should develop and implement a plan to maintain and manage their easements.

In order to develop an easement maintenance and management plan, the Northeast Interceptor (NEI) route was reviewed to evaluate location of existing or required easements, condition of those easements, and encroachments into those easements by vegetation, structures, and other utilities that could be impairing the integrity, and thus the reliability, of the NEI. An Easement Management Plan was then developed that addresses maintenance procedures, utility encroachments, accessibility, permitted land uses, and permitted structures and vegetation.

7.1.1 COW PS 35 Force Main Route to NEI Gravity Sewer Upstream of COW PS 34

The 20-inch COW PS 35 force main exits the pump station and crosses Oleander Drive (US Highway 76) to the east side and extends to the intersection with Greenville Loop Road within the NCDOT right of way. From the intersection of Oleander and Greenville Loop, the force main extends along the east/south of Greenville Loop within the City of Wilmington right of way to the intersection with the entrance to the Oakmont Subdivision (Tidal Oaks Drive). At the intersection with Tidal Oaks, the force main discharges to 20-inch gravity sewer.

Based on a field review of the COW PS 35 force main, as located by the City, it appears that the force main route lies entirely within NCDOT and City rights of way and no easements exist or are necessary. However, it is recommended that existing vegetation that has overgrown to encroach into the right of way be removed to provide better access to the force main and prevent any future issues.

View of vegetation with right of way along Greenville Loop. NEI force main is located right of the pole.

7.1.2 NEI Gravity Sewer to COW PS 34

From the intersection of Tidal Oaks and Greenville Loop, the gravity sewer extends south along the east side of Tidal Oaks within a 15' wide easement conveyed to New Hanover County (DB 1219, PG 0106). The NEI sewer and easement extends approximately 116 feet into Oakmont Subdivision where it turns southwest (at manhole "D") and follows the property line between Oakmont Subdivision and the Beck property (Scotchman convenience store at the intersection of Greenville Loop Road and Pine Grove Drive) approximately 233 feet to manhole "C" within the City right of way along Pine Grove Drive. The gravity sewer extends from manhole "C" within the City right of way of Pine Grove Drive and discharges into the COW PS 34 collection manhole (MH A).

This 15-foot easement is within a residential area. Accordingly, apparent encroachments such as fences, plantings, and possibly house footings were noted within the easement. A large oak tree was also noted adjacent to the easement near the entrance to Oakmont.

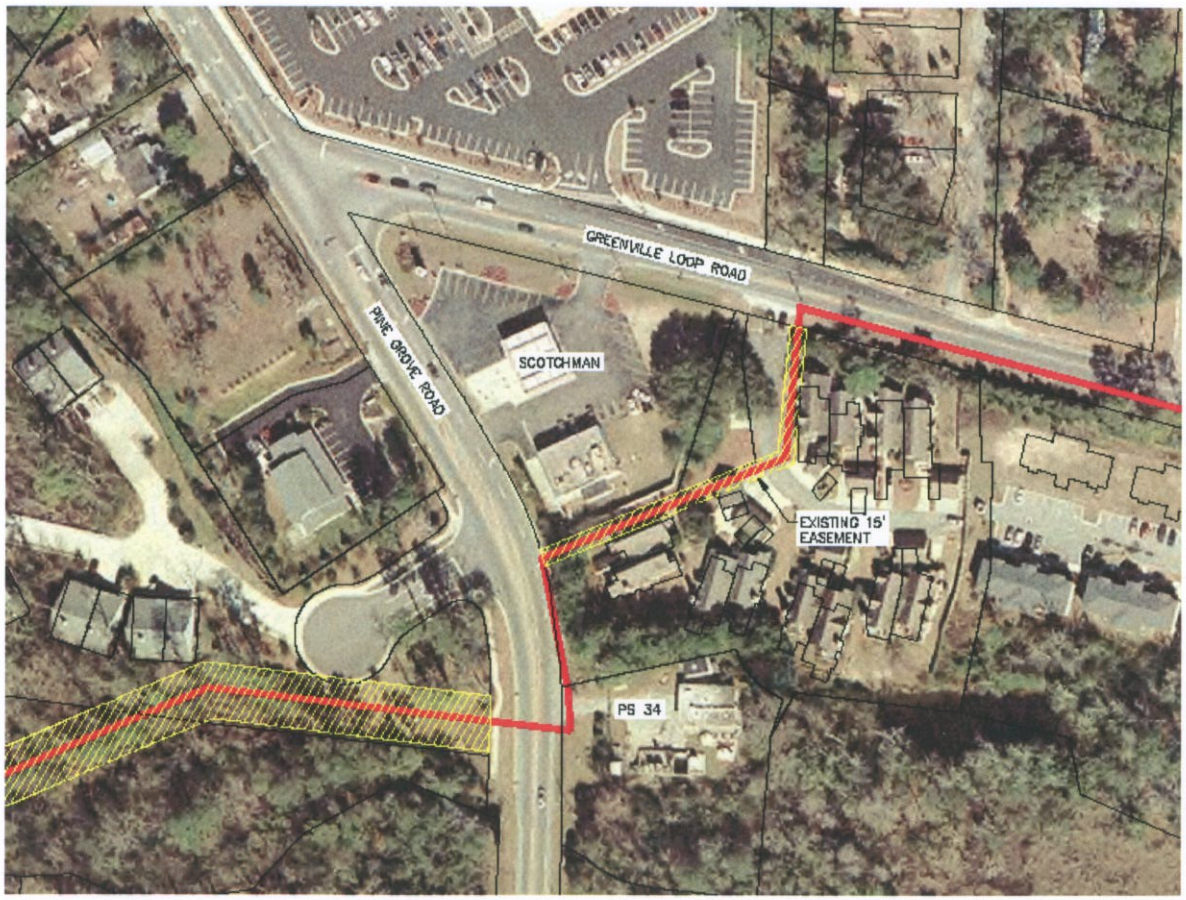

Aerial View of NEI Gravity Sewer Easement

View looking south at the easement from manhole "E" at the intersection of Tidal Oaks and Greenville Loop (entrance of Oakmont Subdivision). Note landscaping within the easement and proximity to the residence.

View looking north from manhole "D" to manhole "E" at the easement to the intersection of Tidal Oaks and Greenville Loop (entrance of Oakmont Subdivision). Note landscaping within the easement, the proximity to the residence, and the branches of the large oak tree to the west.

View looking southwest from manhole "D" along the easement adjacent to the property line of Oakmont Subdivision and the Scotchman convenience store property. Note landscaping within the easement and the proximity to the existing residence. The wall of the farthest residence is at the edge of the 15' easement. It appears the footing may extend into the easement.

View looking Upstream of Sanitary Sewer Manhole "C" toward Greenville Loop Road

Based on a field review of the NEI Gravity Sewer to COW PS 34, it appears that the approximately 350 linear feet of the gravity sewer route lies within an existing 15' easement (Oakmont Subdivision Easement). If this sewer is to remain active, it is recommended that the easement be cleared of vegetation and encroachments such as fences and decks. The Easement should be kept clear to allow for access for monitoring and maintenance.

7.1.3 COW PS 34 Force Main Route to Southside Wastewater Treatment Plant

The 24-inch force main from COW PS 34 to the Southside Wastewater Treatment Plant leaves PS 35 and crosses Pine Grove Drive at the pump station and then roughly parallels Hewletts Creek in a 50' public utility easement (MB PG ;MB 47, PG 234). This easement contains other gravity sanitary sewer lines as well. The force main extends in this easement to the end of Cascade Drive. The force main then continues within the City right-of-way of Cascade Drive to South College Road (NC 132) where it crosses under South College. After crossing South College Road, the force main runs across the Long Leaf Mall parking lot at the intersection of South College and Shipyard Blvd (SR 1101). The force main then extends along the south side of Shipyard Blvd. within the NCDOT right-of-way to the intersection with Stonewall Jackson Avenue, where it turns south and continues down Stonewall Jackson Avenue within the City right of way. At the end of Stonewall Jackson, the force main and turns west along the south side of Semmes Drive within the City right of way. Near the intersection of Semmes Drive and Pettigrew Drive, the force main turns south down a 30' wide easement adjacent to Independence Blvd. and continues toward the intersection of 17th Street and Independence Blvd., where it enters the City right-of-way along Independence Blvd. The force main continues down Independence Blvd. within the City right of way until it leaves the right of way just prior to the shopping center at the intersection of Carolina Beach Road and Independence Blvd. and follows a 30' easement (DB 1482, PG 1051; DB 1452, PG 324) approximately 57' off the right-of-way line of Independence Blvd and adjoining the shopping center parking lot. The force main crosses Carolina Beach Road (US 421) and follows a 30' easement for a short distance before re-entering the City right-of-way along Independence Blvd. The force main continues within the right-of-way of Independence Blvd. to River Road where it crosses River Road and extends along the west side of the City right of way along River Road to the Southside Wastewater Treatment Plant. Photographs and descriptions of the easements for this route are shown below.

Hewletts Creek Easement

Existing sewer easement along Hewletts Creek

The sewer easement accommodating the NEI between Pine Grove and Cascade parallels and crosses Hewletts Creek. The easement is quite wet and difficult to travel without specialized equipment. The area has recently been mowed by the City by the use of a track mounted brush cutter and logging mats. Substantial diameter trees had grown on the easement prior to the previous mowing. This vegetation, coupled with the wet environment, can be problematic for infiltration and access for maintenance.

View of existing sewer easement Along Hewletts Creek looking upstream toward PS 34

View of existing sewer easement Along Hewletts Creek looking upstream near Warlick Drive

Utility Easement Along Hewletts Creek near ARV#6 and Whitner Dr.

View of NEI Force main easement adjoining Shipyard near Longleaf Mall

Longleaf Parking Lot Easement

The easement traversing the Longleaf parking lot spans from Cascade to Shipyard Blvd. This mostly paved section is characterized by sign and area light pole encroachments throughout the length. Also, some landscaping, including pine trees, has been placed and allowed to grow within the easement. Roots from such can be detrimental to integrity of the pipeline.

Semmes Drive to Independence Blvd Easement

The 30-foot sewer easement located between Semmes Drive and Independence Blvd. is shared with a Progress Energy powerline. The full 30-feet of the easement does not appear to be cleared with small pine trees noted to be present. The cleared portion of the easement width appears to be well maintained and mowed making it easily traversable.

Semmes Drive to Independence Blvd Easement

Utility Easement Upstream of ARV#4 towards Semmes Drive (Independence Blvd is on the left and Cameron Art Museum is on the right)

Food Lion Parking Lot Easement

The 30-foot sewer easement located between the Food Lion parking lot and Independence Blvd. is shared with a Progress Energy powerline. The easement is characterized by crossing under a 72-inch culvert/fabri-form lined channel. Small trees and landscaping were noted along the western edge of the easement. The full easement width appears to be well maintained and mowed making it easily traversable.

Food Lion Parking Lot utility easement near Carolina Beach Road

Utility easement near Carolina Beach Road and Independence Blvd. The force main/easement crosses the culvert at the shopping center driveway and follows near the power poles in the background.

7.1.4 Recommendations

We recommend the following actions to address the issues identified above:

- Implement an operational easement management and maintenance plan.
- Adopt a formal easement encroachment policy clearly specifying permitted encroachments and procedures for City authorization of such requests.
- Remove all trees from easements.
- All water and sewer lines need to be readily accessible – All easements should be traversable to allow for maintenance and monitoring.
- Do not allow unathorized encroachments from private owners onto easements (fences, buildings and plantings) that may impede inspection and maintenance of the utilities.

7.2 Recommended Operational Easement Maintenance and Management Plan

As part of routine maintenance procedures, the City should implement standard procedures ti ensure that easements are maintained in such a manner to provide safe reliable operation of the utility systems to maximizing the service life of the facilities.

Given many of the observation requirements for municipalities with regard to utility systems and their associated permits, periodic review and record keeping is essential. As such, the following tasks should be implemented as the operational maintenance plan:

- All easements should be kept clear to allow for access for both maintenance and inspection. Unauthorized vegetation should be mowed annually.
- Requested encroachments should be reviewed and formally accepted by way of permit applications for items such as signs, landscaping and driveways.
- Unauthorized encroachments should be identified and removed by working with the City code enforcement/inspections department. Such removals should be at the expense of the property owner.
- Records of easement clearing activities and any noted encroachments (authorized and unauthorized) should be logged.

7.2.1 Easement Definition and Purpose

Mirram-Webster defines an easement as "an interest in land owned by another that entitles its holder to a specific limited use or enjoyment." With respect to the City of Wilmington utility easements, the definition can be simplified to encompass legal, recorded rights to own, operate, construct, inspect, and maintain water and sewer facilities such as pipelines, manholes, valves, and other structures. The designated and recorded width of the easements should be in accordance with the City of Wilmington design standards and adopted City ordinances. Such uses are required for the safe and economical upkeep of the City utility systems.

7.2.2 State Mandated Requirements

As part of the State's regulation and oversight of municipalities and their operation and maintenance of utility systems, accessibility is key. Within the State of North Carolina's Sewer Collection System shell permit and 15 A NCAC 2H.0227, rights-of-ways and easements are addressed as follows:

Rights-of-way and/or easements shall be properly maintained to allow accessibility to the wastewater collection system unless the Permittee can demonstrate the ability to gain temporary access in an emergency situation where existing land-use conditions do not allow the establishment and maintenance of permanent access. In this case, the Permittee shall continue to observe the lines visually, utilize remote inspection methods (e.g. CCTV) and use the opportunity of drier conditions to perform further inspections and necessary maintenance.

A general observation of the entire collection system shall be performed throughout the course of every year.

Inspections of all high priority lines (i.e. aerial line, sub-waterway crossing, line contacting surface waters, siphon, line positioned parallel to stream banks that are subject to eroding in such a manner that may threaten the sewer line, or a line designated a high-priority in a permit) shall be performed at least once per every six month period of time.

As part of the NC DWQ collection system permitting program plan and record keeping requirements, the following minimum record keeping and observation are required:

Right-of-way Maintenance – Some form of tracking right of way clearing and maintenance should be kept to show work activity throughout the year. This could be a map that is highlighted and dated to show the work performed or some type of written form that indicates the location, date, observations and activity. This log can also be used to document a general observation of the lines as discussed in the general observation log.

General Observation Log – This will be to conform to the permit requirement to observe the entire collection system throughout the course of every year, including outfall lines. This could be similar to the Right-of-Way Maintenance Log such as a map highlighting the areas observed (and date) or some other written type form indicating the date and areas observed. Regularly traveled paths, sewer cleaning, right-of way maintenance, and areas visible by the general public all count as "observed" portion of the line. It is the lines that are not regularly seen by the public or maintenance crews that are of concern and need to be recorded as look at sometime throughout the year.

As dictated by these State requirements, the maintenance and record keeping of such activities is essential to achieve general permit compliance.

7.3 Recommended Easement Maintenance and Management Plan Policy

The City of Wilmington should consider adopting a formal easement management plan policy to help regulate and standardize easement maintenance, accessibility, and permitted uses for City water and sewer easements. Such a formal policy will enable to City to enforce compliance with State mandated requirements and regulate encroachments.

7.3.1 Purpose

The City of Wilmington's goal is to provide safe, reliable, and economical water and sewer service to all customers. In pursuit of that goal, procurement and maintenance of utility easements is vital to safe operation of the City water and sewer system. Easements should be legally granted or conveyed by recorded plat, legal description, or deed.

7.3.2 City's Interests and Rights Within Easements

The City of Wilmington shall have the right to clear, maintain, and travel all city utility easements in such a manner to remain in compliance with State mandated operational requirements and general maintenance practices. The city shall have the right to clear and keep cleared the full width of the easement from brush, trees, plants and all other materials, obstructions, and structures that interfere with or prohibit the general maintenance and management.

Any City approved plantings or encroachments (i.e. signs, driveways, parking lots, and temporary storage sheds, etc.) within the utility easements shall be placed at the owner's expense with the understanding that the City may damage/remove such encroachments during maintenance and operation of the utilities if they impede or prevent operations. Upon such an occurrence, the owner shall be solely responsible for the removal and subsequent replacement of such encroachments. The City shall not be financially obligated to pay for any damage to such encroachments as a result general maintenance of the utility easements and facilities.

7.3.3 Easement Maintenance Procedures and Accessibility

The City shall have the right to clear and maintain the entire width of the easement. Such clearing shall consist of mowing, grinding, and/or herbicide applications. Easements should be kept clear of all trees, debris, and obstructions that would prevent traversing of the easement for facility inspections and as required for routine and emergency maintenance. It will be at the discretion of the City to determine the necessary width of required clearing. However, a minimum of 15' should be maintained at all times in order to prevent root damage to buried piping. Easements should be graded smooth, free of rocks, stumps, and debris. All agency permits and regulations shall be adhered to in maintenance of the easements. Such clearing should take place at least once per year or as growth impede inspection and maintenance operations. This frequency shall coincide with State mandated monitoring requirements.

7.3.4 Encroachments

Any encroachments shall require the written approval of the City. Such approved encroachments shall be placed at the owner's expense and without any financial obligation to the City for any damage associated with easement/utility maintenance and inspection activities.

All utility encroachments within dedicated City utility easements and right-of-ways should only be granted with close coordination with the vertical and horizontal location of both the existing and planned water and sewer facilities. Situations of "stacking" of other utilities should be avoided.

Property owners shall not place any part of a structure, permanent equipment (i.e. transformers, HVAC units, generators, etc.), walls, or impoundments within City utility easements. Fences shall be allowed to cross easements as long as gates are provided for City access along the easement. Otherwise, the City may not be held responsible for the removal or damage of such fencing. Parking lots, grassed areas, driveways, and similar uses shall be permitted with the written approval of the Utility Department. See Appendix J for sample encroachment application forms.

7.3.5 Landscaping

All easements shall remain free of landscaping unless specifically approved in writing by the City Utility Department. In order for any plantings to be considered, a planting plan consisting of approved flowers, shrubs, and trees must be used. Plants should be limited to those that are shallow rooted, low growing, hardy and inexpensive, and expendable. A sampling of suitable shrubs and trees include:

Shrubs:
Bayberry
Baccharis
Beauty Berry
Button Bush
Downy Arrowhead
Russian Olive
Silky Dogwood
Smooth Sumac
Sweet Shrub
Wild Indigo
* List is subject to change.

Trees:
Dogwood
Redbud
Red Buckeye
Red Cedar
Toothache Tree
* List is subject to change.

The City will make all reasonable endeavors to avoid damage to approved plantings. However, should such plantings be damaged during maintenance procedures, the City will not be responsible for the damage or resulting repair/maintenance of the plantings.

Plantings or other obstructions installed without the written permission of the City Utility Department will be subject to immediate removal. A written notice will be transmitted to the property owner with a period given of 30 days for the removal of the obstructions. If an emergency situation arises that requires removal and/or damage to the obstructions, the City will not be financially responsible for such. In such cases, owner notification may not be possible.

FIGURES

TM 2.1 – Current NEI Feed System

TM 2.2 – Proposed NEI Feed System

TM 2.3 – Existing NHC Junction Box at COW PS 35

TM 2.4 - Proposed NHC Junction Manhole at COW PS 35 (Site Plan)

TM 2.5 - Proposed NHC Junction Manhole at COW PS 35 (Manhole Detail)

TM 2.6 – Modeled NEI Gravity Section at Average Daily Flow

TM 2.7 - Modeled NEI Gravity Section at Design Maximum Capacity

TM 2.8 – Proposed Routing Alternatives at COW PS 34

TM 2.9 – COW PS 34 Existing Influent Flow Schematic

TM 2.10 – Proposed Junction Manhole Modifications at COW PS 34

TM 2.11 – Proposed Precast Junction Manhole at COW PS 35

SOURCES:

1. McKIM & CREED 2005 WASTEWATER MASTER PLAN UPDATE
2. NHC HAND DRAWN SKETCH
3. NHC PUMP STATION LIST
4. SEWER SUB-BASIN GIS MAP
5. NHC COMMENTS (MAY 2006) ON WORKING SCHEMATIC

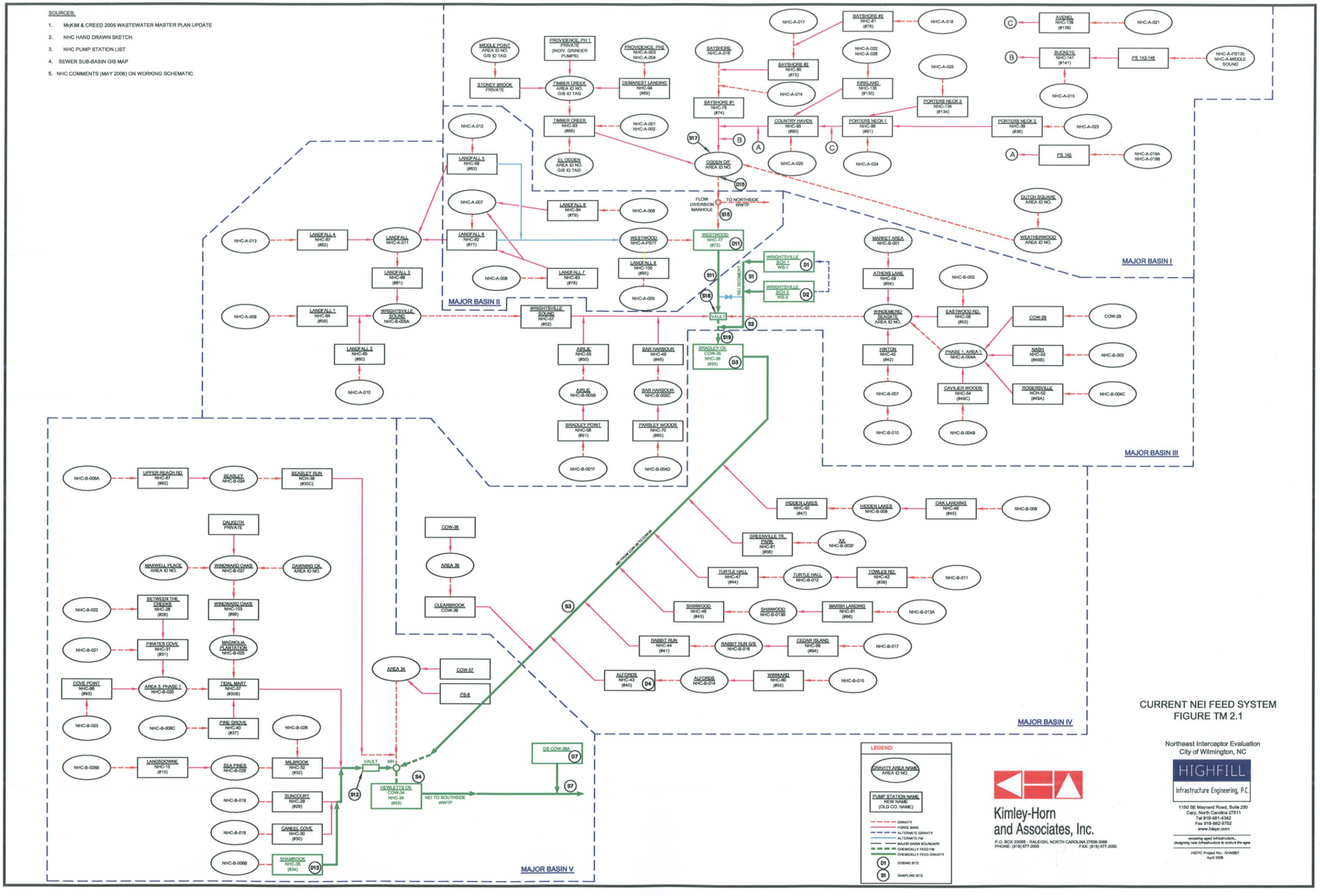

CURRENT NEI FEED SYSTEM
FIGURE TM 2.1

Kimley-Horn and Associates, Inc.
P.O. BOX 33068 - RALEIGH, NORTH CAROLINA 27636-3068
PHONE: (919) 677-2000 FAX: (919) 677-2050

Northeast Interceptor Evaluation
City of Wilmington, NC

HIGHFILL
Infrastructure Engineering, P.C.
1150 SE Maynard Road, Suite 250
Cary, North Carolina 27511
Tel 919-481-4342
Fax 919-882-9762
www.hiepc.com

renewing aged infrastructure... designing new infrastructure to endure the ages

HIEPC Project No.: KHA0801
April 2008

SOURCES:

1. McKIM & CREED 2005 WASTEWATER MASTER PLAN UPDATE
2. NHC HAND DRAWN SKETCH
3. NHC PUMP STATION LIST
4. SEWER SUB-BASIN GIS MAP
5. NHC COMMENTS (MAY 2006) ON WORKING SCHEMATIC

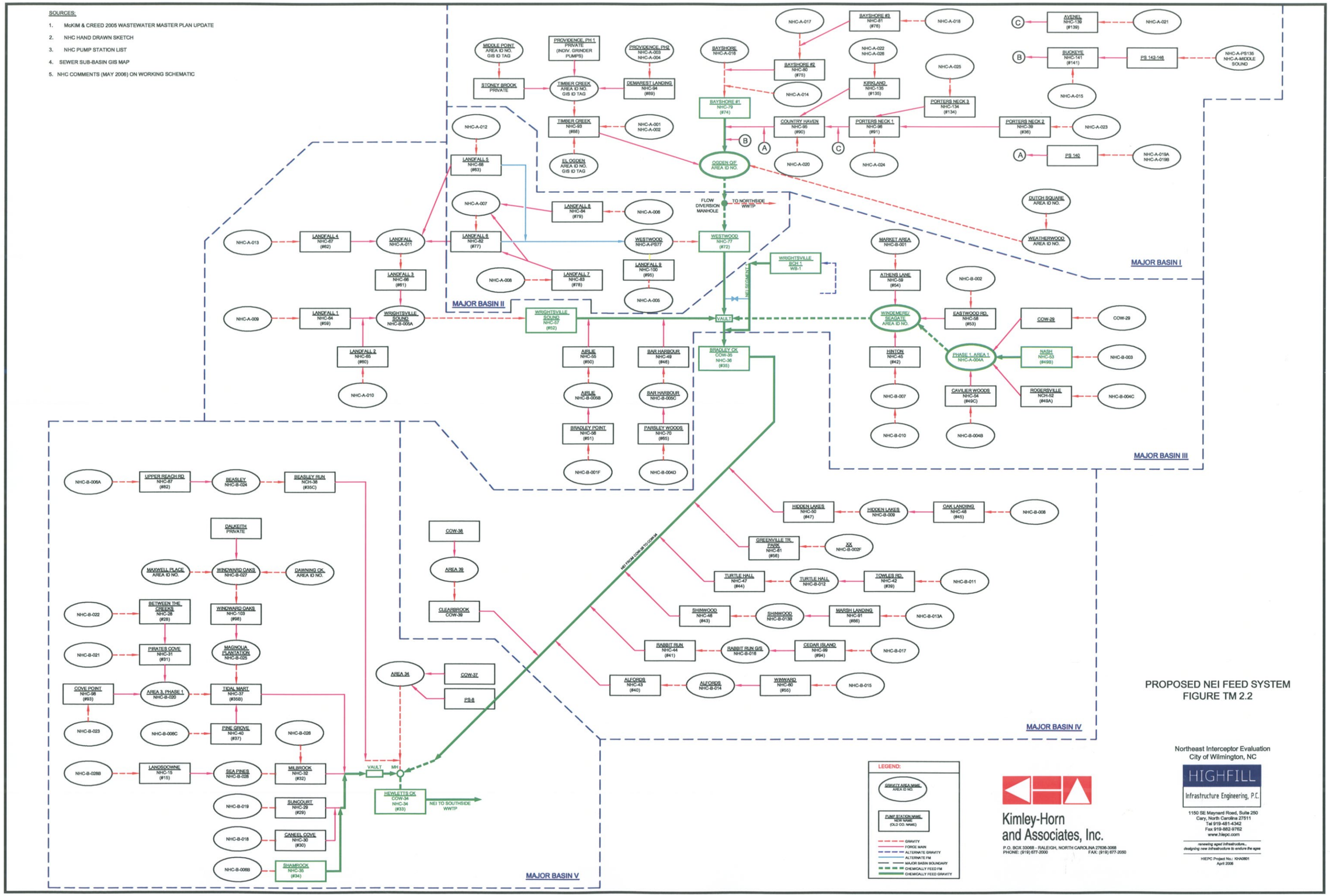

PROPOSED NEI FEED SYSTEM
FIGURE TM 2.2

Kimley-Horn and Associates, Inc.
P.O. BOX 33068 - RALEIGH, NORTH CAROLINA 27636-3068
PHONE: (919) 677-2000 FAX: (919) 677-2050

Northeast Interceptor Evaluation
City of Wilmington, NC

HIGHFILL
Infrastructure Engineering, P.C.
1150 SE Maynard Road, Suite 250
Cary, North Carolina 27511
Tel 919-481-4342
Fax 919-682-9762
www.hiepc.com

renewing aged infrastructure... designing new infrastructure to endure the ages

HIEPC Project No.: KHA0801
April 2008

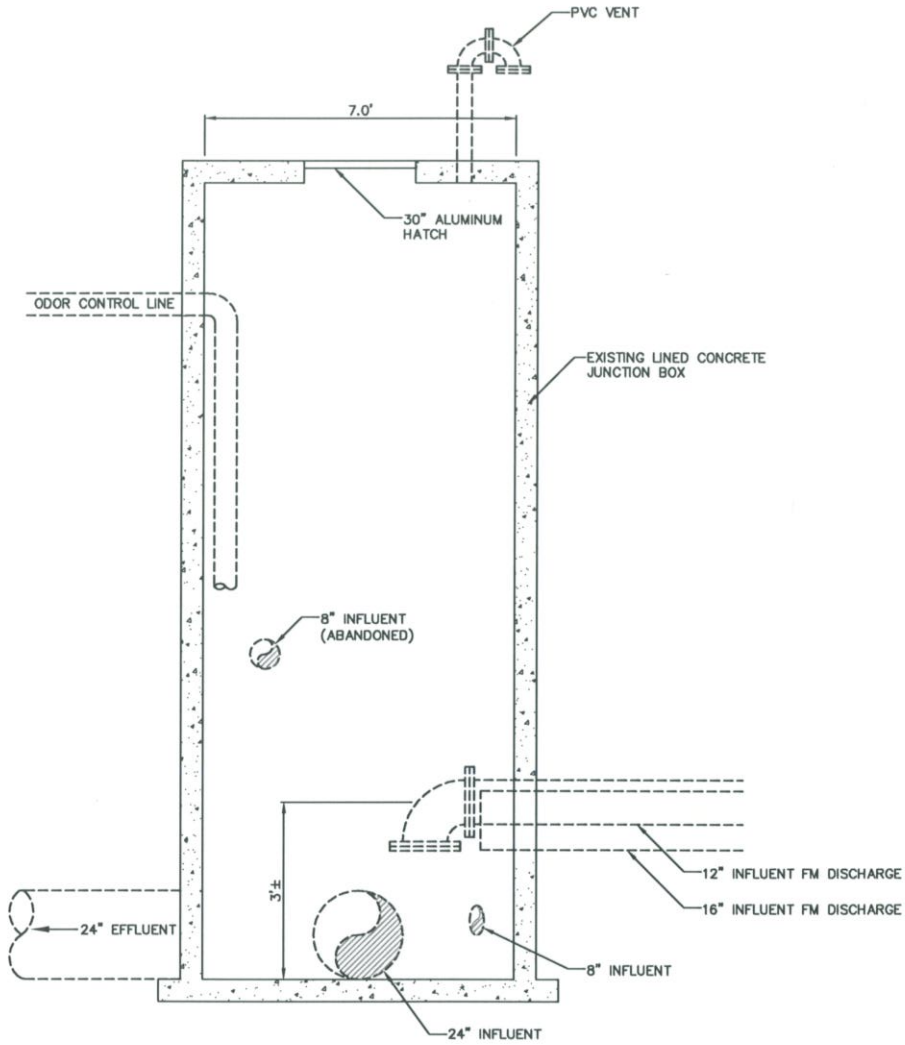

SECTION A–A

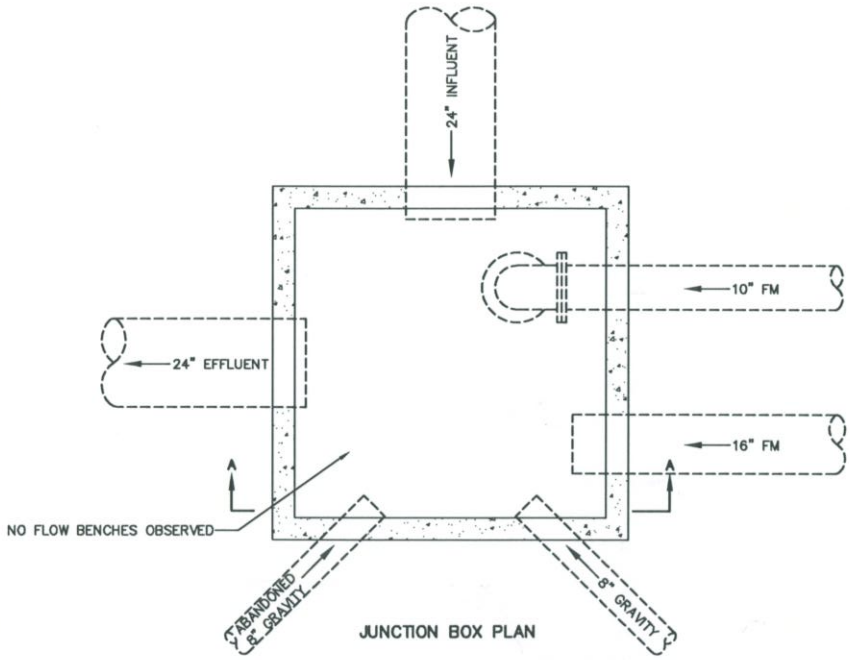

JUNCTION BOX PLAN

N.T.S.

Kimley-Horn and Associates, Inc.	DATE 06/28/06	EXISTING NHC JUNCTION BOX AT PS 35	KHA JOB NUMBER 011335022	FIGURE TM 2.3

THIS DOCUMENT, TOGETHER WITH THE CONCEPTS AND DESIGNS PRESENTED HEREIN, AS AN INSTRUMENT OF SERVICE, IS INTENDED ONLY FOR THE SPECIFIC PURPOSE AND CLIENT FOR WHICH IT WAS PREPARED. REUSE OF AND IMPROPER RELIANCE ON THIS DOCUMENT WITHOUT WRITTEN AUTHORIZATION AND ADAPTATION BY KIMLEY-HORN AND ASSOCIATES, INC. SHALL BE WITHOUT LIABILITY TO KIMLEY-HORN AND ASSOCIATES, INC.

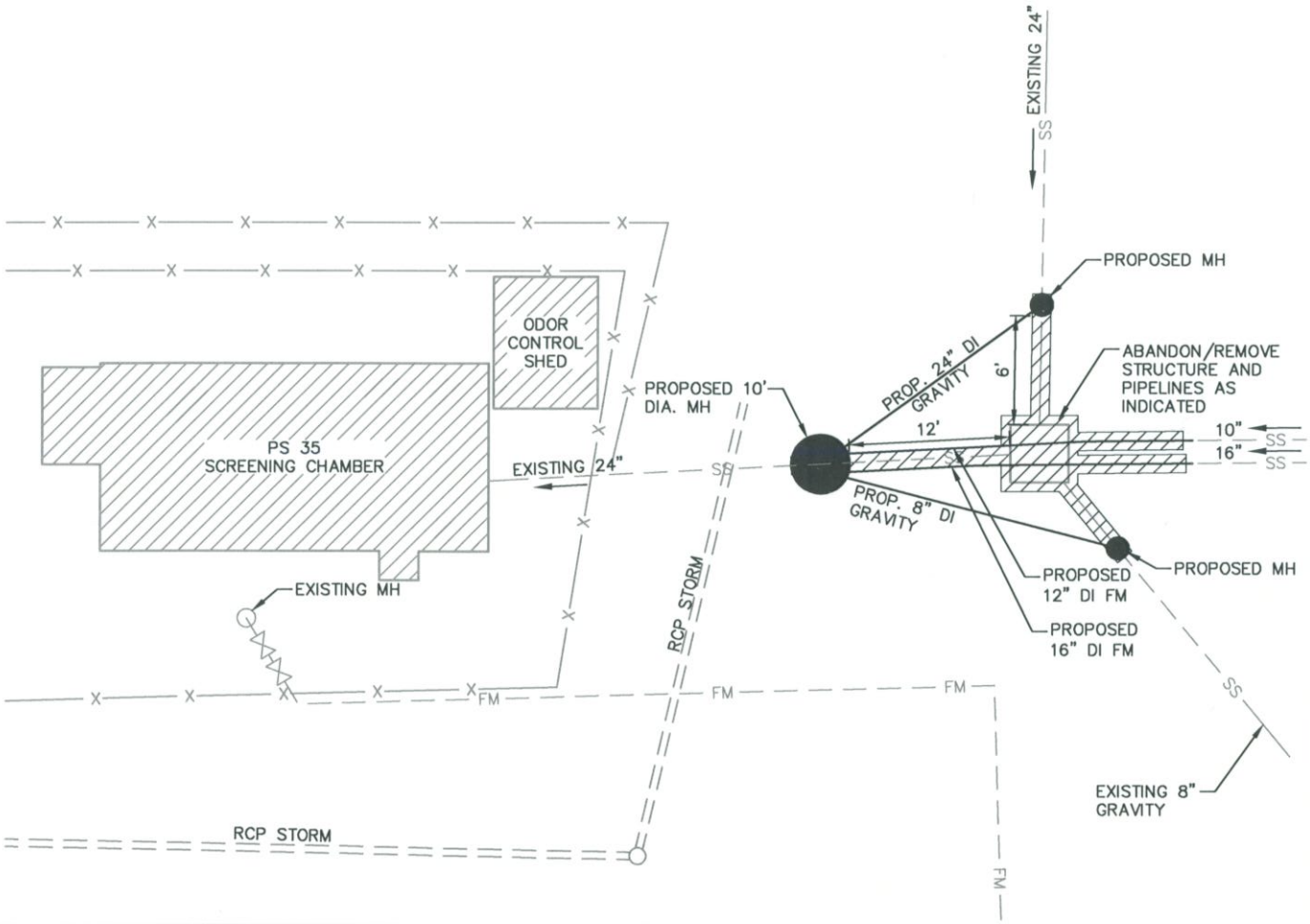

OLEANDER DRIVE

N.T.S.

Kimley-Horn and Associates, Inc.	DATE 06/28/06	PROPOSED NHC JUNCTION MANHOLE AT PS 35	KHA JOB NUMBER 011335022	FIGURE TM 2.4

THIS DOCUMENT, TOGETHER WITH THE CONCEPTS AND DESIGNS PRESENTED HEREIN, AS AN INSTRUMENT OF SERVICE, IS INTENDED ONLY FOR THE SPECIFIC PURPOSE AND CLIENT FOR WHICH IT WAS PREPARED. REUSE OF AND IMPROPER RELIANCE ON THIS DOCUMENT WITHOUT WRITTEN AUTHORIZATION AND ADAPTATION BY KIMLEY-HORN AND ASSOCIATES, INC. SHALL BE WITHOUT LIABILITY TO KIMLEY-HORN AND ASSOCIATES, INC.

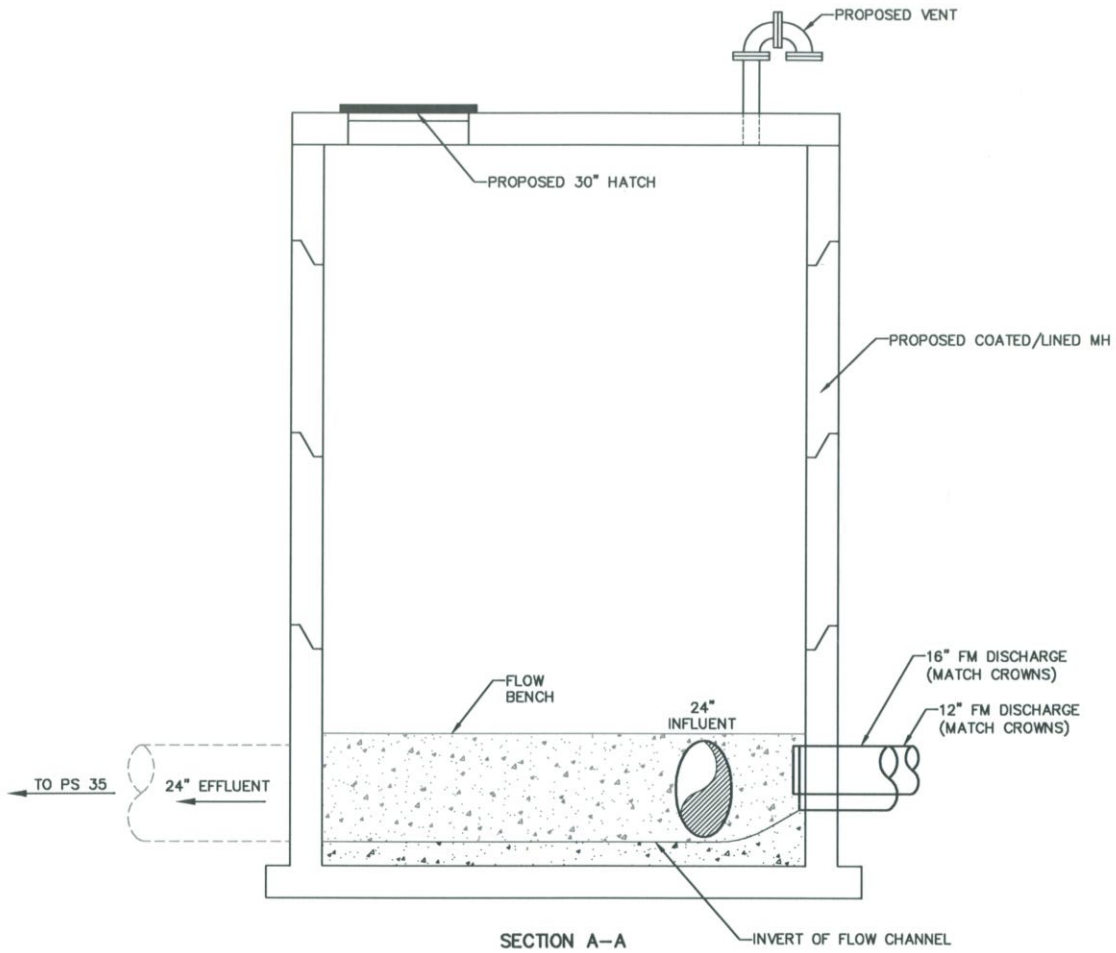

SECTION A–A

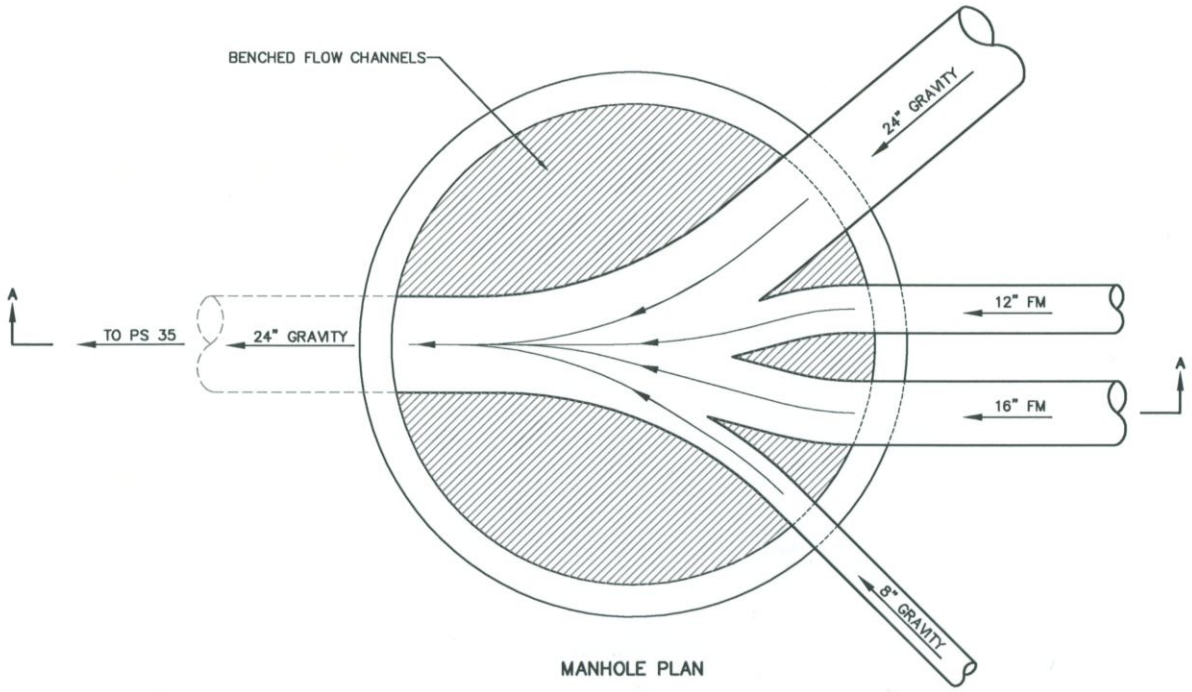

MANHOLE PLAN

N.T.S.

Kimley-Horn and Associates, Inc.	DATE 06/28/06	PROPOSED NHC JUNCTION MANHOLE AT PS 35	KHA JOB NUMBER 011335022	FIGURE TM 2.5

THIS DOCUMENT, TOGETHER WITH THE CONCEPTS AND DESIGNS PRESENTED HEREIN, AS AN INSTRUMENT OF SERVICE, IS INTENDED ONLY FOR THE SPECIFIC PURPOSE AND CLIENT FOR WHICH IT WAS PREPARED. REUSE OF AND IMPROPER RELIANCE ON THIS DOCUMENT WITHOUT WRITTEN AUTHORIZATION AND ADAPTATION BY KIMLEY-HORN AND ASSOCIATES, INC. SHALL BE WITHOUT LIABILITY TO KIMLEY-HORN AND ASSOCIATES, INC.

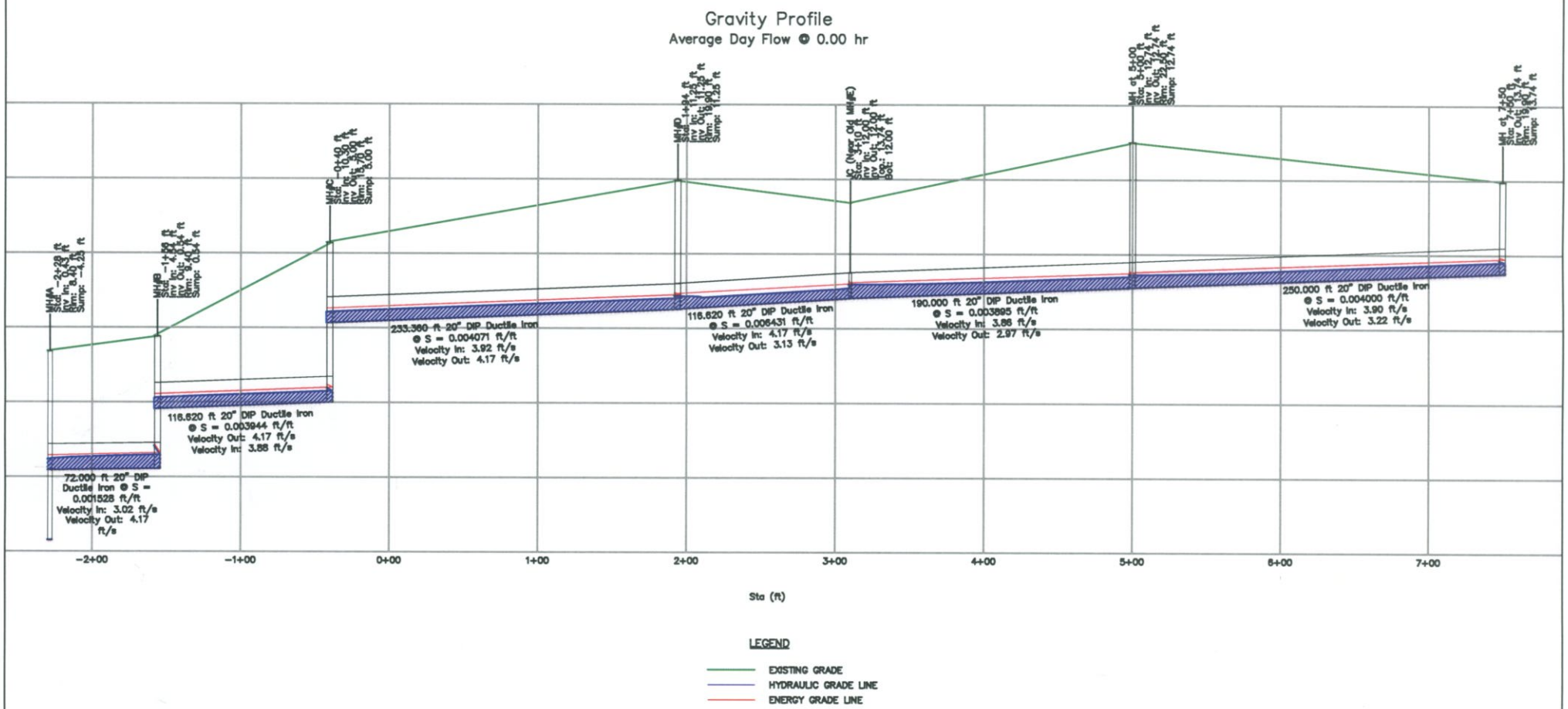

Kimley-Horn and Associates, Inc.	DATE 06/28/06	MODELED NEI GRAVITY SECTION AT AVERAGE DAILY FLOW	HYDRAULICALLY INDUCED CORROSION	FIGURE TM 2.6

THIS DOCUMENT, TOGETHER WITH THE CONCEPTS AND DESIGNS PRESENTED HEREIN, AS AN INSTRUMENT OF SERVICE, IS INTENDED ONLY FOR THE PURPOSE AND CLIENT FOR WHICH IT WAS PREPARED. REUSE OF AND IMPROPER RELIANCE ON THIS DOCUMENT WITHOUT WRITTEN AUTHORIZATION AND ADAPTATION BY KIMLEY-HORN AND ASSOCIATES, INC. SHALL BE WITHOUT LIABILITY TO KIMLEY-HORN AND ASSOCIATES, INC.

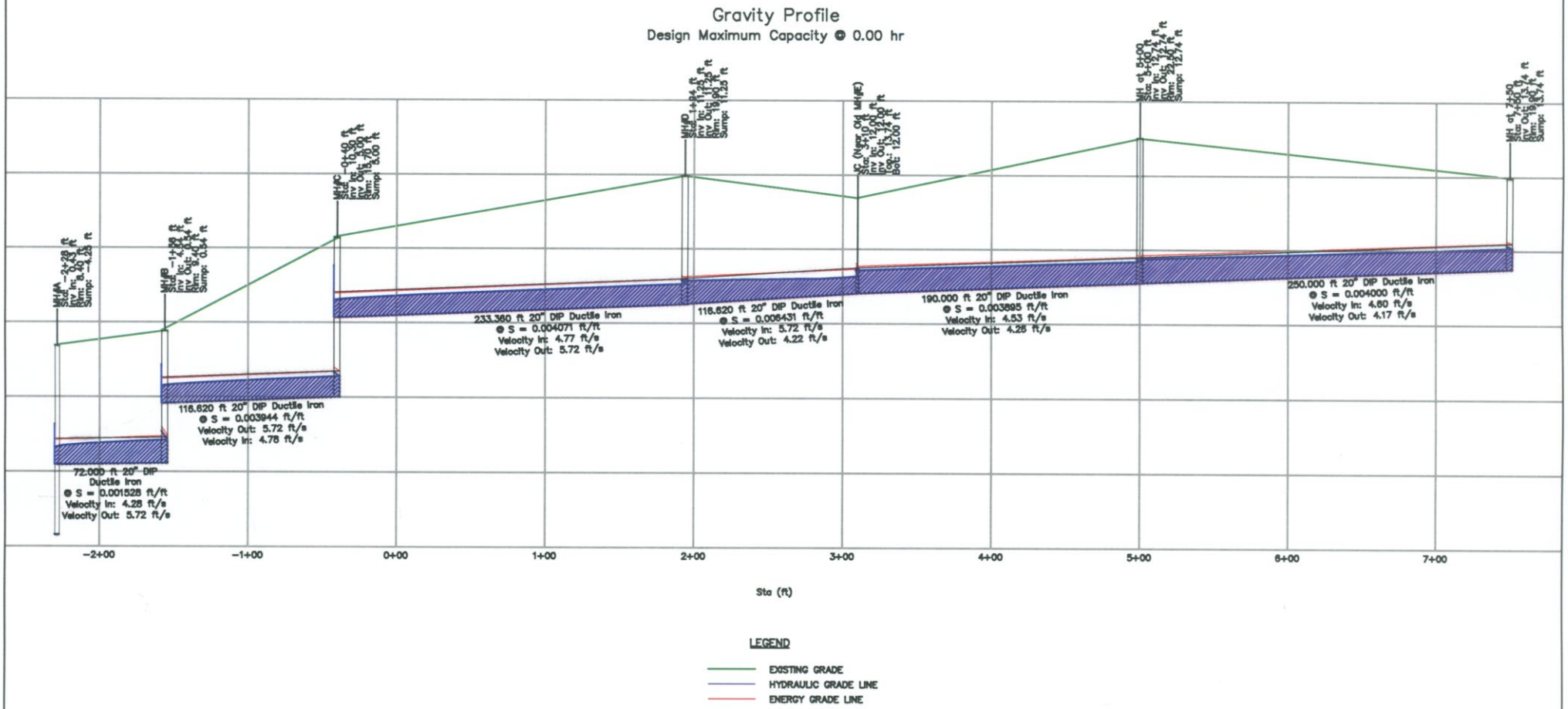

Kimley-Horn and Associates, Inc.	DATE 06/28/06	MODELED NEI GRAVITY SECTION AT DESIGN MAXIMUM CAPACITY	HYDRAULICALLY INDUCED CORROSION	FIGURE TM 2.7

THIS DOCUMENT, TOGETHER WITH THE CONCEPTS AND DESIGNS PRESENTED HEREIN, AS AN INSTRUMENT OF SERVICE, IS INTENDED ONLY FOR THE PURPOSE AND CLIENT FOR WHICH IT WAS PREPARED. REUSE OF AND IMPROPER RELIANCE ON THIS DOCUMENT WITHOUT WRITTEN AUTHORIZATION AND ADAPTATION BY KIMLEY-HORN AND ASSOCIATES, INC. SHALL BE WITHOUT LIABILITY TO KIMLEY-HORN AND ASSOCIATES, INC.

FIGURE TM 2.8

KHA JOB NUMBER 011335022

PROPOSED ROUTING ALTERNATIVES AT PS 34

DATE 6/28/06

Kimley-Horn and Associates, Inc.

THIS DOCUMENT, TOGETHER WITH THE CONCEPTS AND DESIGNS PRESENTED HEREIN, AS AN INSTRUMENT OF SERVICE, IS INTENDED ONLY FOR THE PURPOSE AND CLIENT FOR WHICH IT WAS PREPARED. REUSE OF AND IMPROPER RELIANCE ON THIS DOCUMENT WITHOUT WRITTEN AUTHORIZATION AND ADAPTATION BY KIMLEY-HORN AND ASSOCIATES, INC. SHALL BE WITHOUT LIABILITY TO KIMLEY-HORN AND ASSOCIATES, INC.

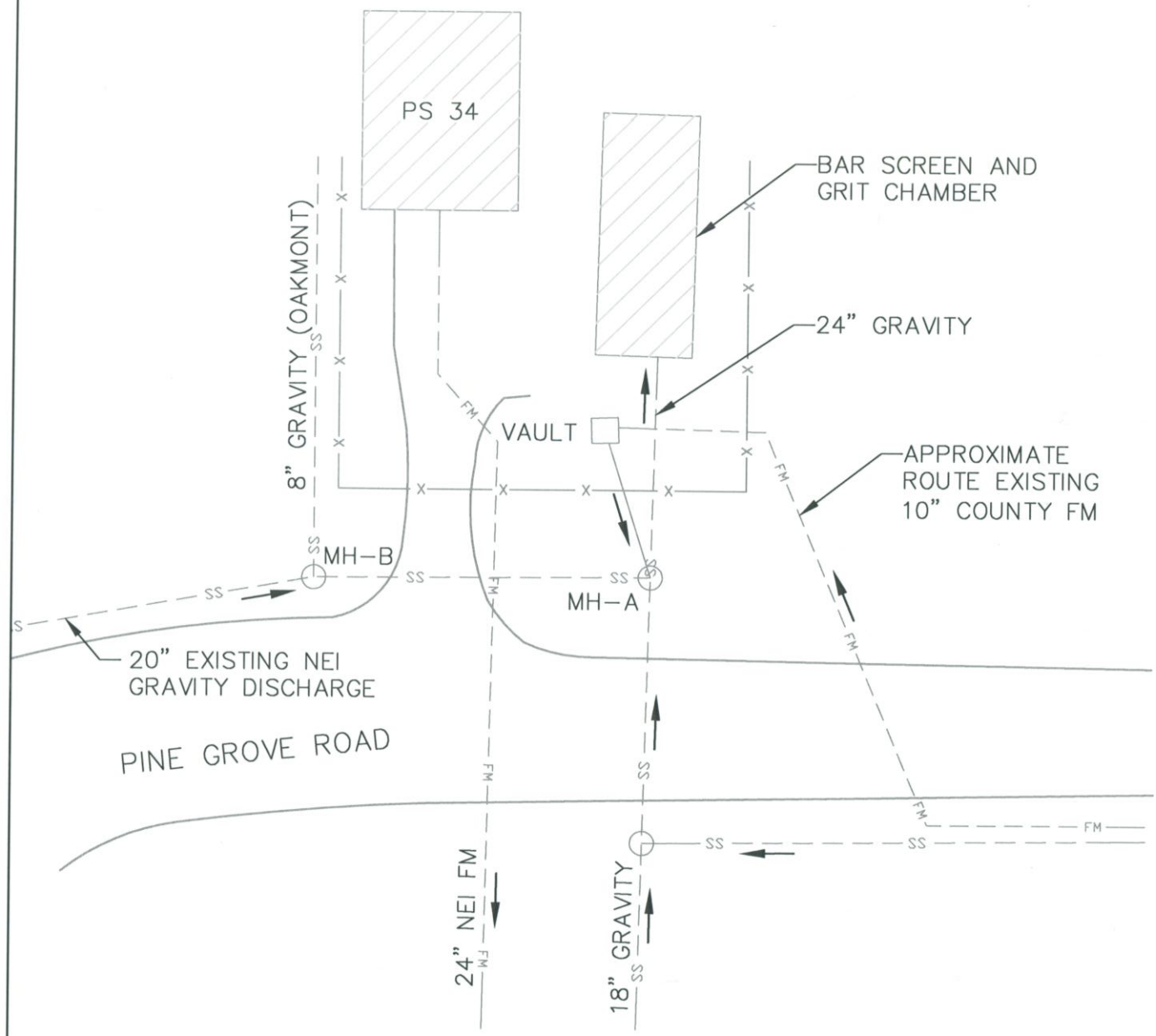

Kimley-Horn and Associates, Inc.	DATE 06/28/06	PS 34 EXISTING INFLUENT FLOW SCHEMATIC	KHA JOB NUMBER 011335022	FIGURE TM 2.9

THIS DOCUMENT, TOGETHER WITH THE CONCEPTS AND DESIGNS PRESENTED HEREIN, AS AN INSTRUMENT OF SERVICE, IS INTENDED ONLY FOR THE SPECIFIC PURPOSE AND CLIENT FOR WHICH IT WAS PREPARED. REUSE OF AND IMPROPER RELIANCE ON THIS DOCUMENT WITHOUT WRITTEN AUTHORIZATION AND ADAPTATION BY KIMLEY-HORN AND ASSOCIATES, INC. SHALL BE WITHOUT LIABILITY TO KIMLEY-HORN AND ASSOCIATES, INC.

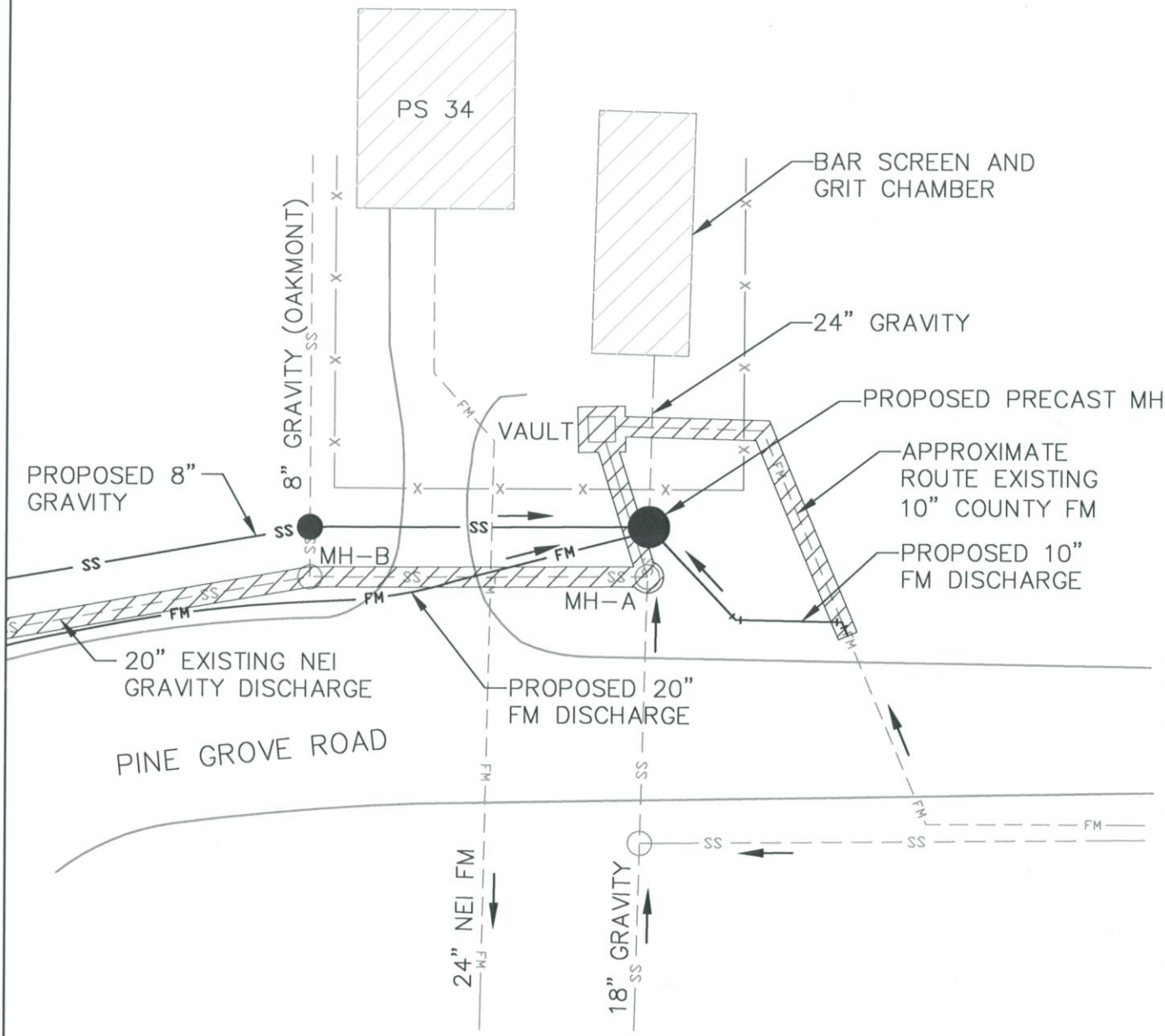

N.T.S.

Kimley-Horn and Associates, Inc.	DATE 06/28/06	PROPOSED JUNCTION MANHOLE MODIFICATIONS AT PS 34	KHA JOB NUMBER 011335022	FIGURE TM 2.10

THIS DOCUMENT, TOGETHER WITH THE CONCEPTS AND DESIGNS PRESENTED HEREIN, AS AN INSTRUMENT OF SERVICE, IS INTENDED ONLY FOR THE SPECIFIC PURPOSE AND CLIENT FOR WHICH IT WAS PREPARED. REUSE OF AND IMPROPER RELIANCE ON THIS DOCUMENT WITHOUT WRITTEN AUTHORIZATION AND ADAPTATION BY KIMLEY-HORN AND ASSOCIATES, INC. SHALL BE WITHOUT LIABILITY TO KIMLEY-HORN AND ASSOCIATES, INC.

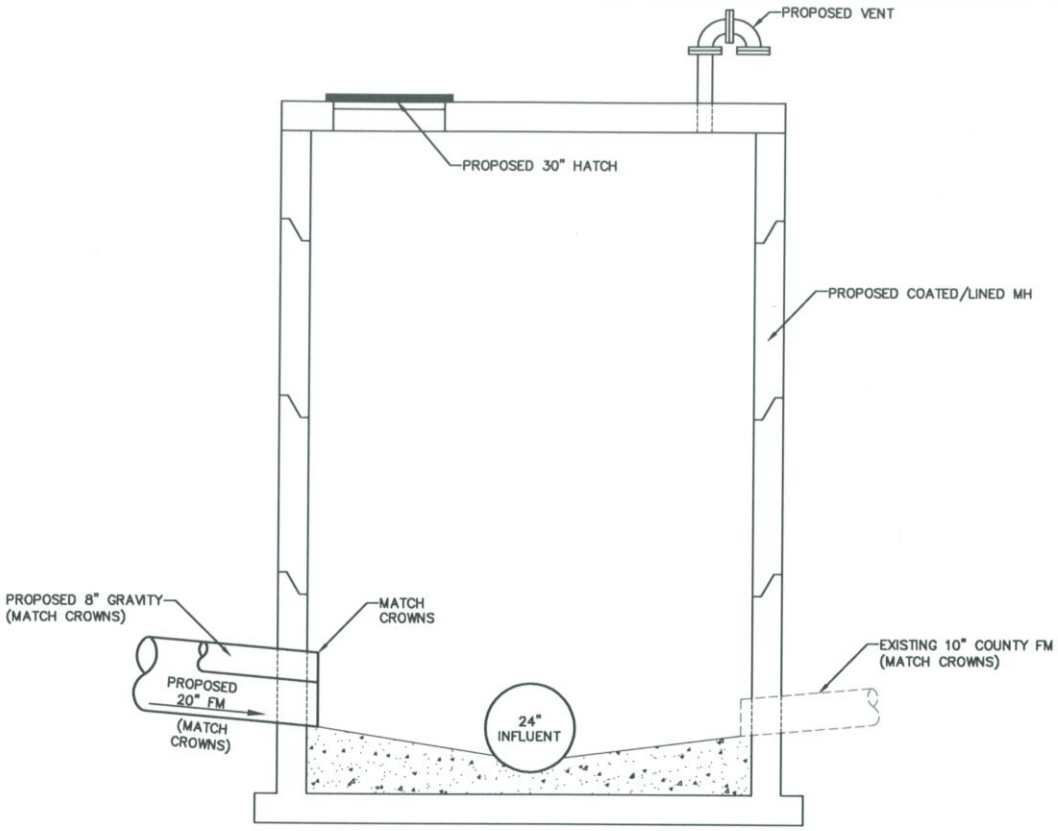

SECTION A–A

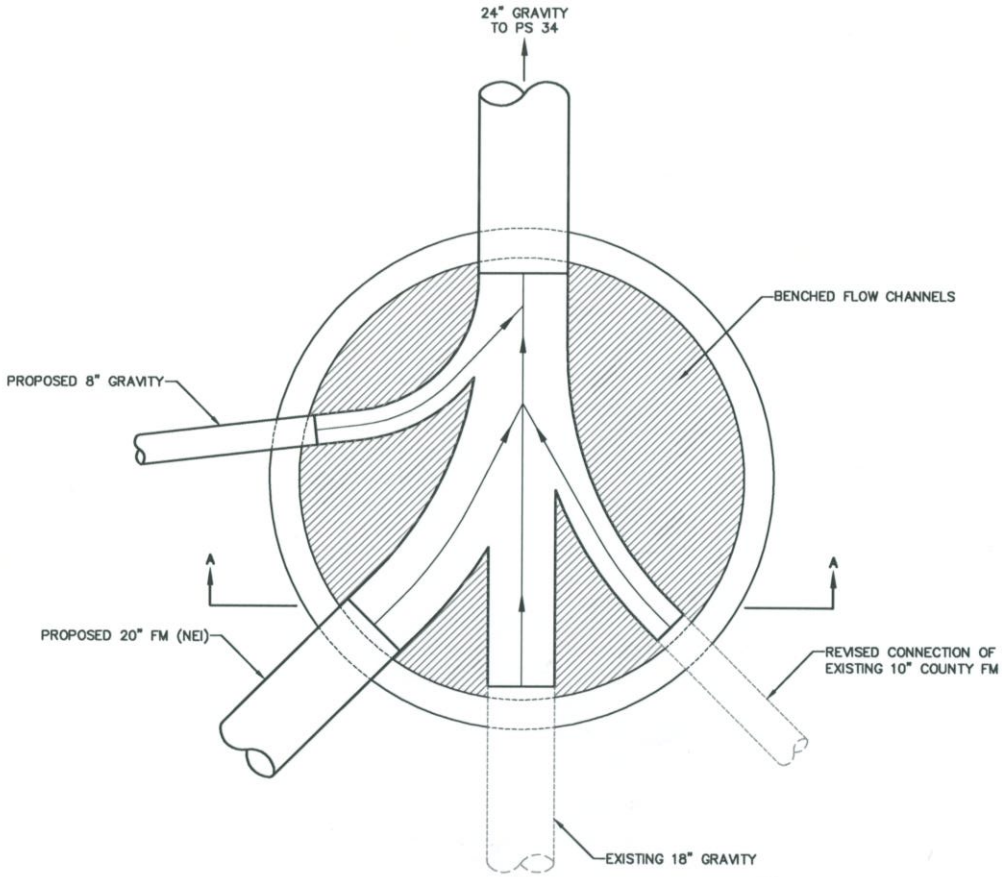

MANHOLE PLAN

N.T.S.

Kimley-Horn and Associates, Inc.	DATE 06/28/06	PROPOSED PRECAST JUNCTION MH AT PS 34	KHA JOB NUMBER 011335022	FIGURE TM 2.11

THIS DOCUMENT, TOGETHER WITH THE CONCEPTS AND DESIGNS PRESENTED HEREIN, AS AN INSTRUMENT OF SERVICE, IS INTENDED ONLY FOR THE SPECIFIC PURPOSE AND CLIENT FOR WHICH IT WAS PREPARED. REUSE OF AND IMPROPER RELIANCE ON THIS DOCUMENT WITHOUT WRITTEN AUTHORIZATION AND ADAPTATION BY KIMLEY–HORN AND ASSOCIATES, INC. SHALL BE WITHOUT LIABILITY TO KIMLEY–HORN AND ASSOCIATES, INC.

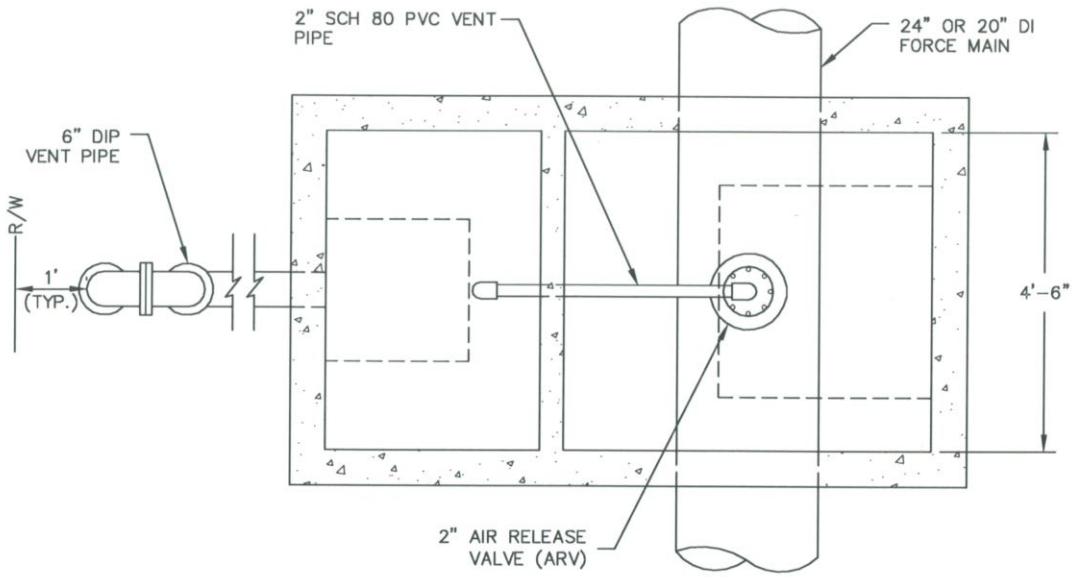

PLAN

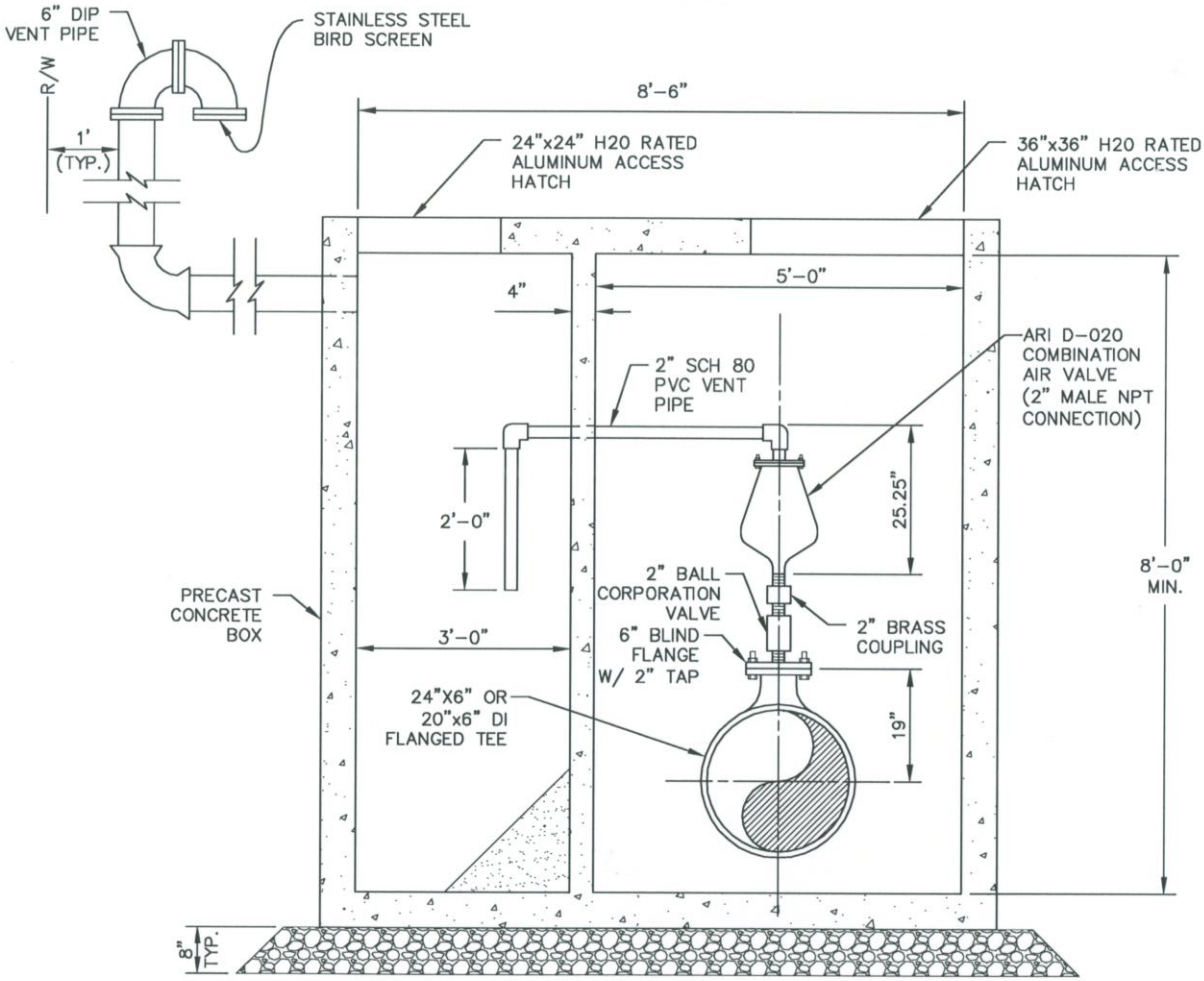

SECTION

N.T.S.

Kimley-Horn and Associates, Inc.	DATE 06/28/06	COW AIR RELEASE VALVE ASSEMBLY	KHA JOB NUMBER 011335022	FIGURE TM 2.12

THIS DOCUMENT, TOGETHER WITH THE CONCEPTS AND DESIGNS PRESENTED HEREIN, AS AN INSTRUMENT OF SERVICE, IS INTENDED ONLY FOR THE SPECIFIC PURPOSE AND CLIENT FOR WHICH IT WAS PREPARED. REUSE OF AND IMPROPER RELIANCE ON THIS DOCUMENT WITHOUT WRITTEN AUTHORIZATION AND ADAPTATION BY KIMLEY-HORN AND ASSOCIATES, INC. SHALL BE WITHOUT LIABILITY TO KIMLEY-HORN AND ASSOCIATES, INC.

APPENDIX A

Odor Corrosion Control Program Contract No. S12-0104

Original: WWTD OCCP 2004-2006 Con
File.
Copy: Ken.

CITY of WILMINGTON
North Carolina

P.O. BOX 1810
28402

320 Chestnut Street, Wilmington, NC
Central Services-Purchasing Division
Phone (910) 341-7830
Fax (910) 341-7842

March 29, 2004

RECEIVED
APR 11 2006
KIMLEY-HORN
ENVIR
MAR 30 2004

Ms. Gayle Tollefsen
ALTIVIA Corporation
1100 Louisiana, Suite 3160
Houston, TX 77002

RE: Odor Corrosion Control Program
Contract No. S12-0104

Dear Ms. Tollefsen,

Enclosed is an executed contract for the referenced project.

This contract, having been completely executed, is your authority to begin work in accordance with the agreement.

We appreciate your cooperation in executing this contract.

Sincerely,

Steven D. Bridges sks

Steven D. Bridges
Purchasing Agent

SDB/sks

Enclosure

cc: Ken Vogt, Superintendent of Wastewater Plant
Jeff Cermak, Plant Supervisor, NSWWTP
Milton Vann, Plant Supervisor, SSWWTP
Hugh Caldwell, Director of Public Utilities
Wyatt Blanchard, New Hanover County
Mike Vukelich, Wrightsville Beach
WWTD File Copy

STATE OF NORTH CAROLINA
COUNTY OF NEW HANOVER

CONTRACT NO: S12-0104

MAR 30 2004

AGREEMENT BETWEEN THE CITY OF WILMINGTON, NORTHCAROLINA AND ALTIVIA CORPORATION

THIS AGREEMENT is entered into as of the 19th day of March, 2004, by and between the **CITY OF WILMINGTON, NORTH CAROLINA** (hereinafter called (**"CITY"**), a municipal corporation located in New Hanover County, North Carolina and **ALTIVIA CORPORATION**, a corporation organized under the State of Texas, (hereinafter called the "OCCP CONTRACTOR").

WITNESSETH

1. Purpose of Agreement

The purpose of this agreement is for the CITY to obtain the services of the OCCP CONTRACTOR to furnish complete equipment, chemical product, and technical services at certain application sites as required for the control of malodorous emissions and corrosion in the wastewater force main collection systems and/or treatment plants operated or regulated by the City of Wilmington, the Town of Wrightsville Beach, or the New Hanover County Water & Sewer District.-the Odor and Corrosion Control Program (OCCP). In addition to the terms and conditions contained in this contract, the Proposal submitted by OCCP CONTRACTOR is also incorporated by reference.

2. Scope of Services

2.1 General

2.1.1 It is understood and agreed between the CITY and the OCCP CONTRACTOR that the OCCP CONTRACTOR shall maintain a designated Project Manager acceptable to the City throughout the term of the contract to administer the work to be performed under this agreement. The Project Manager shall have responsibility in direct control over all work performed by the OCCP CONTRACTOR on the scope of services contained herein. No substitution of Project Manager shall be made without CITY approval. Such approval by the CITY shall not be unreasonably withheld.

2.1.2 The OCCP CONTRACTOR shall provide and maintain with the CITY a list of any and all Suppliers and Subcontractors performing any of the services proposed under this agreement. The OCCP CONTRACTOR shall be responsible to the CITY for the performance of the Suppliers and Subcontractors.

2.1.3 The OCCP CONTRACTOR shall execute all services under this agreement in a manner as to not interfere with the CITY's collection and wastewater treatment system. The method of conducting services shall at all times, be subject to the CITY's approval without in any way relieving the OCCP CONTRACTOR'S responsibility for the same. Of paramount importance at all times is the CITY's ability to continue uninterrupted operation of the utility system, to maintain the safety of the CITY district's, and town's personnel in performing necessary utility operations, and to maintain high quality and

uninhibited wastewater stream and sludge stream treatment within the treatment plants and atmospheric emissions from its systems. The OCCP CONTRACTOR shall not introduce any chemical products in quantities (or containing impurities) which may inhibit the treatment plant processes, including sludge settling in clarifiers, aerobic biological activity within trickling filters and/or activated sludge processes, or anaerobic biological digestion of sludge. Chemical products in the quantities used shall not cause a "pass-through" of a constituent to plant effluent which is a violation of plant NPDES effluent standards or receiving stream standards established for the Cape Fear River by the State of North Carolina, or contribute to a failure by the CITY to pass either acute or chronic effluent toxicity test of plant effluent as required by the State of North Carolina. The OCCP CONTRACTOR unequivocally understands that the CITY's obligations to the State of North Carolina with regard to the quality of plant discharges, system atmospheric emissions, and digested sludge used as a soil amendment for agricultural purposes are of greater importance than maintaining chemical treatment for odor and corrosion control, and that the CITY reserves the exclusive right at any time to direct the OCCP CONTRACTOR to immediately reduce or cease chemical product injection from any or all application sites, without the necessity of proving in any way whether or not the chemicals caused or contributed to any problems occurring within the treatment system.

2.1.4 In the event of any emergency that may be an imminent danger to life or property, the OCCP CONTRACTOR may take immediate action necessary to eliminate or reduce the danger, and then shall immediately notify the CITY of such action taken. In cases other than the emergency just described, the OCCP CONTRACTOR shall not operate the CITY's valves or other equipment, or make connections to CITY provided sources of electrical power or potable water without the specific approval of the CITY.

2.1.5 The OCCP CONTRACTOR shall insure that all work under this agreement satisfies all present State, Federal, and local laws and regulations. The OCCP CONTRACTOR shall secure, at no additional cost to the CITY, all permits, certificates, and licenses required by law for the execution of the work under this agreement.

2.2 Service Objective of this Agreement

As part of its ongoing odor and corrosion control program, the CITY currently utilizes a system of liquid and vapor phase treatment units.

The OCCP CONTRACTOR shall provide to the CITY complete services and shall assume unit responsibility as specified herein for continuous multi-phase (liquid and vapor) odor and corrosion control protection for force main wastewater collection systems as defined herein. Included in these complete services are: (1) definition of application sites, control segments and chemical products used at each application site; (2) design of equipment type and sizes for application sites, and details of construction, consistent with requirements of this agreement; (3) definition of any one-time or periodic special applications (line pigging, special chemical "slug," etc .) designed to reduce the overall costs of odor and corrosion control by conditioning the collection system to require lower dosages of the chemical products continuously in use; (4) supply, install, and maintain vapor reaction chambers chemical storage tanks, chemical and vapor transfer equipment, controls, piping, valving, and other appurtenances; (5) supply chemicals to these storage tanks and vapor reaction chambers as required for odor and corrosion control; (6) provide technical services as required herein to assist CITY to operate and maintain chemical treatment equipment

and appurtenances, monitor and adjust feed rates to optimize cost- effectiveness of its use, and schedule and arrange for chemical deliveries at each application site; and (7) maintain chemical feed equipment and appurtenances to include labor only when repairs or replacement becomes necessary. The City will pay for parts separately, either by obtaining parts through normal business or requesting the OCCP CONTRACTOR to obtain the required parts and billing the CITY.

Based upon extensive experience or comprehensive, conclusive field trials/ demonstrations specific to the CITY's Odor Corrosion and Control Program, the chemicals permitted to be used on a continuous basis under this contract include liquid hydrogen peroxide, potassium permanganate, magnesium hydroxide, and granular activated carbon (GAC). Changes in the chemical or combination of chemicals used at the applicable sites may be made only with CITY approval. The use of ferrous chloride or ferric chloride will not be permitted without the specific written approval of the CITY. The liquid phase treatment chemicals shall be pumped into the collection system, either at a pumping station or directly into a force main, from each site at a controlled rate which is monitored and adjusted as often as necessary in order to maintain odor and corrosion control at all times of the day, during weekends, and during change of seasons. Individual and shared facilities and responsibilities exist among the City, the District, and the Town. Dosages applied shall be maintained and optimized to the contracted standards of performance within each jurisdiction and as wastewater passes from jurisdiction to jurisdiction.

Pump station vapor emissions shall be collected and pumped through vapor reaction chambers, monitoring and adjusting flow rate and chemical media activity/exhaustion/replacement as often as necessary in order to maintain odor and corrosion controls at all times of the day, during weekends, and during change of seasons.

2.3 Definitions

The following terms as used in this agreement shall have the following meanings:

2.3.1 "Application site" shall be a location owned and operated by CITY, the Town of Wrightsville Beach, or the New Hanover County Water and Sewer District where vapor reaction chambers, chemical storage tanks, chemical and vapor transfer equipment, piping and other appurtenances are provided by the OCCP CONTRACTOR to provide chemical treatment for odor and corrosion control.

Application sites may be existing, in-use, and suitable (location, equipment, dosed chemicals, mechanism of exerting control) for effective dosing of some chemicals or may not be suitable for effective dosing of other chemicals, necessitating identification and/or acquisition of new dosing sites and/or installing new equipment. Determinations of this type may be necessary at contract initiation or from time to time throughout the contract. Such determination, together with conclusive supporting justification, shall be brought to the City's attention for its decision on implementation.

2.3.2 "CITY" shall be the City of Wilmington, North Carolina in its responsible role as the administrative agent in this contract representing the interests of the City of Wilmington, Town of Wrightsville Beach, and the New Hanover County Water & Sewer District. Each of these three governmental corporations either own, have interest of title

in, or regulate some portion of the total system under control described in this contract. The City of Wilmington shall be responsible to the OCCP CONTRACTOR for coordinating those responsibilities among the three governmental corporations as they are assigned to the CITY under this contract. Due to the multiple jurisdictions involved, the OCCP CONTRACTOR shall manage dosages so as to maintain control, and optimize performance within each of the respective jurisdictions; that is, minimize any carryover effects between jurisdictions unless such carryover is unavoidable or desirable and suitable institutional responsibilities for control and costs can be identified, agreed to by all parties, and implemented.

2.3.3 "Control segment" shall be the defined length which is a subset of the total system under control. For liquid treatment, it is defined as starting at the point where chemical from an application site contacts the wastewater stream to a point in the pipeline direction toward the treatment plant defined as either of the following: (1) the next point downstream where chemical from another application site contacts the wastewater; or (2) the effluent overflowing from the primary clarifiers at either the Northside or Southside Treatment Plant. For vapor treatment, it is defined as the point(s) at a location where untreated system emissions are collected, and conveyed to, through, and from chemical treatment equipment. A control segment shall be defined for each application site in the downstream (toward the receiving treatment plant or atmospheric emission) direction from that site.

2.3.4 "Date of service initiation" shall refer to the date that chemical product is first applied to begin the control of odor and corrosion specified in this agreement. On this date all equipment not previously installed shall be fully installed and operational at all application sites, and the initial chemical product deliveries completed to each storage tank or reaction chamber.

2.3.5 "District" shall refer to the New Hanover County Water and Sewer District, a governmental corporation whose interests and responsibilities under this contract are being administered through the CITY.

2.3.6 "Odor and corrosion control" shall be defined as a performance requirement of the OCCP CONTRACTOR at any point along the total system under control. Depending upon specific treatment chemicals utilized and their corresponding principles/mechanisms of operation, performance shall be determined separately for each control segment based upon sampling at any location within the defined control segment, with sampling results defining compliance with performance requirements when, as applicable, the following conditions are met: (1) maximum dissolved hydrogen sulfide concentration in the wastewater of 0.75 mg/l at any point along the control segment; (2) maximum airborne hydrogen sulfide concentration of 3.0 mg/l at the PS 34 grit chamber; (3)maximum dissolved hydrogen sulfide concentration of less than 0.75 mg/L at permissible sample points along a control segment except specific locations stated in (2) above; (4) maximum airborne hydrogen sulfide concentration of 3.0 mg/l at any public interface locations such as manhole covers and treatment plant or pump station fence lines or property lines along control segments where the public has access to CITY wastewater facilities;(5) product residual at the end of each control segment of less then 10% of the concentration initially fed at the application site; (6) maximum head space hydrogen sulfide concentration of 20 mg/l at any point along the control segment, headspace being defined as any essentially enclosed or confined atmosphere above the wastewater within the collection system; (7) maintaining the wastewater pH between a range of 7.8 and 8.2 at any point along

the control segment; (8) compliance with NCDENR Air Permit Nos. 5778 R4 AND 5779 R4; (9) other airborne contaminants exceeding applicable duly established regulatory limits; and (10) loss of any materials of construction through wastewater-induced corrosive action exceeding 20% of its original manufactured dimensions(20% total corrosion allowance life cycle; 1% average corrosion allowance annually) or as otherwise established by its manufacturer or other applicable code or requirement, as measured upon the actual component or coupon intended to afford comparable information on material degradation, no loss in function or other induced material failure, such as, for example, wiring material, connections, and insulation, either broad/general or localized, caused by constituents associated with wastewater either dissolved within or imparted to the immediate atmosphere at any CITY facility or component within associated with the system under control.

2.3.7 "Supplier(s)" shall be defined as the firm(s) who manufacture(s) and distribute(s) the chemical product(s) used under services of this agreement. The Supplier(s) may be the same firm as the OCCP CONTRACTOR or may be a firm to which the OCCP CONTRACTOR has obligated by contractual arrangement to deliver chemical product(s) for services of this agreement.

2.3.8 "Total system under control" shall include the total extent of the CITY's wastewater collection system to which odor and corrosion control shall be applied under this contract. This total system is defined to specifically include the following: (1) 14" Wrightsville Beach Interceptor (approximately 17,600 linear feet) from Town Lift Station #1(WB1) to Bradley Creek Pump Station (COW 35); (2) 20" Northeast Interceptor and 21" Gravity Outfall (approximately 16,500 linear feet) from Bradley Creek Pump Station (COW 35) to Hewletts Creek Pump Station (COW 34); (3) 24" Northeast Interceptor (approximately 32,500 linear feet) from Hewletts Creek Pump Station (COW 34) to Southside Wastewater Treatment Plant (COW SSWWTP); (4) 24" River Road Interceptor, approximately 6000 linear feet, from a dosing site at former COW 17 to COW Southside Wastewater Treatment Plant; (5) 10" New Hanover County/Cape Fear Utilities force main, approximately 1,430 linear feet, from interconnection with County Shamrock Pump Station (NHC 35) to Hewletts Creek Pump Station (COW 34); (6) 30" Northside Force Main (approximately 5,100 linear feet) from Smiths Creek Pump Station (COW 10) to Northside Wastewater Treatment Plant (COW NSWWTP); (7) 18" Barnards Creek Forcemain, approximately 4,382 linear feet, from County Barnard Creek Lift Station (NHC 76) to the Southside Wastewater Treatment Plant (COW SSWWTP); (8) 16" Westwood Forcemain, approximately 16,410 linear feet, from County Westwood Lift Station (NHC 77) to Bradley Creek Pump Station (COW 35); (9) 12" Echo Farms Forcemain, approximately 7,440 linear feet, from the junction of City Echo Farms Pump Station 2 (COW 27) and City Independence West Pump Station (COW 36) to the Southside Wastewater Treatment Plant (COW SSWWTP); (10) 24" Ogden Interceptor forcemain approximately 12,400 linear feet, from County Smith Creek Pump Station (NHC 89) to the Northside Wastewater Treatment Plant (COW NSWWTP); (11) 12" Motts Creek Interceptor, approximately 14,190 linear feet, and 10" forcemain, approximately 110 linear feet from County Mott Creek Lift Station (NHC 69) to its junction with Barnards Creek Lift Station (NHC 76); (12) 30" Ogden Interceptor extension approximately 1,156 LF from a dosing site (DS-OP) adjacent to NHC Ogden Park to County Westwood Lift Station (NHC-77); (13) within or emanating from the open channels and wet wells of all intermediate on line pump or lift stations interconnecting these systems; (14) within or emanating from the influent channels piping, and structures of both wastewater treatment plants (COW NSWWTP and COW SSWWTP) to the point where wastewater

is discharged over the effluent weirs of the primary clarifiers. The total system under control represents the sum total of all defined control segments. The pipelines and integral pump/lift stations on the schematic diagrams in Appendix A, plus the areas of the two treatment plants from the headworks to the grit chamber effluent weirs, represent the defined total system under control.

2.3.9 "Town" shall refer to the Town of Wrightsville Beach, a governmental corporation whose interests and responsibilities under this contract are administered through the CITY.

2.4 Qualifications of OCCP CONTRACTOR

Qualifications of the OCCP CONTRACTOR are divided into categories of technical services and chemical product supply.

2.4.1 Technical Services

The OCCP CONTRACTOR shall have among the OCCP CONTRACTOR'S own staff technical personnel fully knowledgeable of the operation, maintenance, and repair of the equipment used and understanding of the process of treating using each specific chemical product proposed to be used for odor and corrosion control as part of this agreement. The OCCP CONTRACTOR shall provide a list of such staff technical personnel with their address and telephone number(s) to the CITY. Technical personnel shall be thoroughly familiar with safety and emergency procedures for each of the chemical products used. Such technical personnel shall also be fully knowledgeable of proper sampling techniques and reliable testing methods for use in determining concentrations of odor and corrosion-producing contaminants and residual of the chemical(s) used, quality control checking of the test results, and interpretation of test results to optimize chemical usage.

2.4.2 Chemical Product Supply

The OCCP CONTRACTOR may also be the Supplier, or shall have under contract a Supplier for each chemical product used under this agreement for odor and corrosion control. The Supplier shall have at least two separate sources/suppliers from which product can be shipped for each different chemical product furnished. The OCCP CONTRACTOR may also meet this condition by contracting with more than one Supplier, each with one warehouse, for the same product. The use of more than one Supplier shall not relieve the OCCP CONTRACTOR of any responsibilities under this agreement for the quality and purity of product delivered. The OCCP CONTRACTOR shall provide a list of each supplier with their contact person, address and telephone number(s) to the CITY.

2.5 Chemical Product Requirements

All chemical products delivered to any application sites under this Agreement shall meet all conditions specified as follows:

2.5.1 Liquid hydrogen peroxide: Liquid hydrogen peroxide solution shall be a 50% technical grade with the following properties: (1) a minimum 50% but not greater than 52% hydrogen peroxide by weight: (2) Specific Gravity approximately 1.196; (3) pH between 2.0 and 4.0 S.U. (4) Boiling Point of solution= 237 degF and Freezing Point= -

62 degF; (5) Free Acid less than 0.006% by weight; and (6) Residue (chemical constituents other than hydrogen peroxide and water)less than 0.06% by weight.

2.5.2 Potassium permanganate: Potassium permanganate shall fully comply with the requirements of American Water Works Association Standard B603-88. An affidavit of compliance with the AWWA specification shall be supplied with each delivery as well as the total weight of pure potassium permanganate in the delivery, pH, and gallons determined by a certified analysis prior to shipment. If the OCCP CONTRACTOR chooses to ship potassium permanganate to the site in granular form, the OCCP CONTRACTOR shall furnish all equipment and labor required to dissolve and mix the product into solution such that each separate solution is of a consistent concentration as defined below.

2.5.3 Liquid magnesium hydroxide: Liquid magnesium hydroxide shall be stabilized aqueous suspension of magnesium hydroxide at nominal concentration of 63% solids by weight with the following properties: (1) a minimum of 60% but not greater than 65% magnesium hydroxide solids by weight; (2) a minimum of 91.5% and nominally 92.5% MgO; (3) other constituents 7.5%; (4) viscosity nominally 350 cp with a minimum of 200 cp but not greater then 800 cp. (5) Freeze point 32°F.

2.5.4 The OCCP CONTRACTOR shall make every effort to maintain consistency of active ingredients within the chemical products so as to provide a consistent basis for adjusting liquid feed rates at the metering pump to the conditions necessary for odor and corrosion control and avoid underfeeding or overfeeding based on differences in concentrations from different deliveries. Changes in the chemical or combination of chemicals used at the application sites may be made only with the CITY's approval.

All conditions limiting residue and impurities in the standards referenced above shall be rigorously complied with. The OCCP CONTRACTOR shall continuously attempt to obtain the highest quality of product economically available. As a minimum, the following maximum allowable dosages of heavy metals shall be complied with throughout the contract period. For chemical(s) exceeding the maximum concentration quantities below, the OCCP CONTRACTOR shall follow steps outlined in Paragraph **"2.10 Piping and Appurtenances."** For granular deliveries the concentrations on heavy metals in the granular materials shall be converted on the basis of a liquid solution defined as the minimum concentration by the applicable AWWA standard.

If under this Agreement sampling results identify noncompliance with any of the minimum standards immediately below, the OCCP CONTRACTOR shall have fourteen (14) days after first becoming aware of the noncompliance to make changes to achieve compliance and to furnish sampling and sample results confirming compliance (sampling and testing to confirm compliance will be at no expense to the CITY) along with a letter to the CITY explaining corrective steps taken. If noncompliance may detrimentally impact the force main wastewater collection systems as defined herein, or exceeds fourteen days, or if the same noncompliance should subsequently recur, the CITY may terminate this Agreement with cause under the conditions of Section 9.

MAXIMUM ALLOWABLE DOSAGES UNDER THIS CONTRACT

	MAXIMUM APPLIED CONCENTRATION CHEMICAL SOLUTION (per delivery) -(mg/l)-	SOUTHSIDE PLANT ADDITIONS (consecutive 24 hrs) -(lbs/day)-	NORTHSIDE PLANT ADDITIONS (consecutive 24 hrs) -(lbs/day)-
Cadmium	0.003	0.675	0.377
Chromium	0.002	0.06	0.08
Copper	0.041	1.00	1.00
Lead	0.049	0.43	1.30
Mercury	0.0003	0.01439	0.0742
Nickel	0.021	0.22	0.62
Zinc	0.165	0.86	1.00
Iron	2.900	177.0	313.30
pH	5.0 - 10.0 standard units (S.U.)		

2.5.5 Granular Activated Carbon

Based upon recent experience and testing performed, high temperature steam activated, chemical impregnated bituminous coal-based Barnebey Sutcliffe ST 1-X GAC, or equal has been recommended for continued use for broad spectrum control of hydrogen sulfide, lower mercaptans, and other malodorus compounds. Projected minimum service life shall be one (1) year. Its predominately macroporous structure prevents pore blockage, resulting in elemental sulfur loading capacity exceeding 30% wt and organic loading loading of 20-40% wt.

Reaction chamber configuration shall be designed for the following contact time and flow rate relationships:

Bed height:	1-3 ft.
Contact time:	0.6-1.8 sec.
Face Velocity:	100 ft/min

Uniform pellet diameter shall produce a pressure drop not to exceed 4.5" H2O/ft bed depth. The OCCP CONTRACTOR shall maintain relative humidity between 10-50% to attain efficient sulfur compound oxidation and maximum sulfur loading capacity.

Representative product specifications follow:

SPECIFICATIONS

KI content	(w/w%)	min.	2
Moisture (as packed) (ASTM D-2887)	(w/w%)	max.	4

GENERAL CHARACTERISTICS

Apparent density (ASTM D-2854)	(g/cc)	0.56 min
H2S capacity (ASTM D-6646)	(gH2S/ccGAC)	0.09 min
Butane activity	(w/w%)	15.6 min
Total ash content (ASTM D-2866)	(w/w%)	7 max
Mean particle diameter (ASTM D-2882)	(mm)	3.7
Hardness no. (ASTM D-3802)	(w/w%)	97 min
Pressure drop, dense packed at 50 ft/min	("H2O/ft)	2.0
Percent on 4 mess U.S. Sieve	%	15 max
Percent on 7 mesh U.S. Sieve	%	8 max

2.6 Application Sites

Typical application site equipment shall include: feed pumps (minimum 2 units per site, 1 unit capable of handling maximum feed requirements and 1 unit serving as redundant standby/backup) piping, valving, controls, power supply, hardware, supports, accessories, fence, secondary containment, SCADA system interconnection.

Locations currently serving as application sites and which can be furnished for use as application sites are listed below:

Site No.	Application Site	Locations Available for Chemical Discharge Piping from Site to Wastewater Flow and Vapor Chemical Treatment for Atmospheric Emission
1	Town Lift Station #1 (WB1)	Liquid chemical treatment connection to 3/8" stainless steel tubing available at lift station site which doses approximately 1000 feet upstream.
2	Town Lift Station #5 (WB5)	Liquid chemical treatment connection to 1" PVC schedule 80 pipe available at lift station site. Pipe is already connected to a tap on 14" force main.
3	City/District Bradley Creek Pump Station #35 (COW 35)	(A) Liquid chemical treatment connection to 3/8" stainless steel tubing available at lift station which doses into exit force main. (B) 980 cu ft. total volume vapor reaction chambers.
4	District Alfords Lift Station #43 (NHC 43)	Liquid chemical treatment connection to 3/8" stainless steel tubing available at lift station site. Pipe is already connected to a tap on 20" joint use (Northeast Interceptor) force main.

5	City/District Hewletts Creek Pump Station #34 (COW 34)	**(A)** Liquid chemical treatment free flow into open channel ahead of station wet well; or (B) liquid chemical treatment tap on 24" force main within station site outside building will be permitted if equipment, labor, and materials for tap by OCCP CONTRACTOR at no added cost to City. (C) 490 cu ft total volume vapor reaction chamber.
6	Former City Pump Station #17 (COW 17)	Liquid chemical treatment connection to 1/2" SS pipe tapped on 24" force main. Forcemain is in right-of-way adjacent to station site on opposite side of roadway.
7	City Independence Blvd. West Pump Station #36(COW 36)	(A) Liquid chemical treatment connection to 1/2" PVC schedule 80 pipe available at pump station site. Pipe is already connected to a tap on 24" Northeast Intercepter forcemain.
8	City Independence Blvd. West Pump Station #36 (COW 36)	(B) Liquid chemical treatment connection into 12" Echo Farms Forcemain.
9	City Smith Creek Pump Station #10 (COW 10)	Liquid chemical treatment free flow into open channel ahead of wet well.
10	District Barnards Creek Lift Station 76 (NHC 76)	Liquid chemical treatment free flow into wet well.
11	District Westwood Dr. Lift Station 77 (NHC 77)	Liquid chemical treatment free flow into wet well.
12	District Shamrock Pump Station #35 (NHC 35)	Liquid chemical treatment connection to ½" SS pipe tapped on 10" Cape Fear Utilities force main. Force main is in right-of-way adjacent to station site on opposite side of roadway.
13	District Smith Creek Pump Station 89 (NHC 89)	Liquid chemical treatment dosed into wetwell.

14	District Motts Creek Pump Station 69 (NHC 69)	Liquid chemical treatment dosed into wetwell.
15	District Ogden Park Dosing Station (NHC OPDS)	Liquid chemical treatment dosed into gravity collection system.
16	SSWWTP	Liquid chemical treatment free flow into wet well.

A schematic showing the layout of the force mains in the collection system which are to be protected against odor and corrosion under this contract and the relative location of the available application sites and a plan of the wastewater service area showing more specifically the location of the above sites and the treatment plants are included within this agreement as Appendices A and B. Application sites may be added and/or deleted, with CITY approval, during the contract period subject to the terms of this Agreement.

If the OCCP CONTRACTOR chooses, with the CITY's approval, an option to furnish piping and a tap for chemical injection to a force main at a location outside of the property boundaries of the station, the OCCP CONTRACTOR shall obtain all permits, easement and/or encroachment agreements, provide or contract for all equipment, materials, and labor necessary for the work, and shall restore all rights-of-way or adjacent property to preexisting conditions after construction is complete. The OCCP CONTRACTOR shall abide by all conditions of any encroachment or easement agreements required. The OCCP CONTRACTOR shall hold the CITY harmless from any claims whatsoever resulting from such work in rights-of-way or property outside the limits of the pump station site, unless such claims arise from the negligence or willful conduct of the CITY, Town, or County and their employees and agencies.

The OCCP CONTRACTOR shall submit a plan to the CITY for review and approval of all construction work proposed within a pump station site. The CITY will approve plans which are reasonable and conform to other access needs and other pump station operations. However, the CITY reserves the right to reject specific proposals which may interfere with other pump station operations and may limit the time allowed for access to pump station equipment or operations to be restricted or reject proposals which restrict access to critical areas of the pump station which must continually remain open. The OCCP CONTRACTOR shall use proper construction techniques in performing such work and take care not to damage any other pump station facilities or utility lines. Any damage resulting from such operations shall be repaired to the satisfaction of the CITY at no additional cost. Areas of asphalt paving, grass or shrubbery disturbed by construction shall be restored upon completion of work. Appropriate sediment and erosion control measures shall be taken during and after the work until no longer necessary, and permits shall be obtained for such measures when required. Application sites other than those listed above are acceptable provided that the OCCP CONTRACTOR secures legal rights to the site, provided barbed-wire fencing or an equivalent means to secure the site against unauthorized entry, and develops the site in a manner conforming to all State, Federal, and local laws and regulations, and all deed or easement restrictions. The OCCP CONTRACTOR shall hold the CITY harmless from any claims whatsoever resulting from the use of alternative sites secured by the OCCP CONTRACTOR, unless such claims arise from the negligence or willful conduct of the CITY, TOWN, or District and their employees and agencies.

2.7 Fluid Transfer

2.7.1 Liquid Treatment: Chemical feed pumps.

The CITY shall provide chemical feed pumps as defined below at each existing application site. The chemical feed pumps shall be of the positive displacement type and shall be capable of accurately metering a specific flow rate based on a setting by the operator and shall be capable of maintaining the same flow rate until the setting is again adjusted regardless of the product level in the storage tank. The pumping rate shall be infinitely adjustable within the pump's capacity range. The pumps shall remain primed after placed into operation within the full variance in liquid level permitted in the storage tank between chemical deliveries.

The specific chemical feed pump models shall be determined by the OCCP CONTRACTOR to provide a match between the accurate metered capacity range of the pumps at each application site and the anticipated ranges of chemical feed necessary for compliance throughout the year with odor and corrosion control provisions of this contract. A minimum of three pumps shall be supplied at each application site, of which at least two shall have an accurate metering range capable of pumping the minimum constant daily rate of chemical required. Two units shall be installed for each dosing point, with the third unit stored at a bonded warehouse as a dedicated spare. One unit shall handle all service requirements and one unit shall serve as standby. The third pump may be of equal size to the other two, or may have a smaller range for use in combination with one of the other two large pumps during periods of the day when peak chemical dosing is required.

The range of each pump shall be suitable for accurately metering desired flows for both winter and summer odor and corrosion control; if the pump's accurate metering range cannot achieve this standard the OCCP CONTRACTOR shall change out pump sizes as often as necessary (but maintaining three pumps for each application site at all times). Material costs associated with equipment replacement needed to continue achieving contract performance standards under changing process conditions shall be borne by the OCCP CONTRACTOR; material costs as associated with equipment replacement necessitated by its malfunction or failure from normal wear and tear while receiving attentive/deliberate maintenance attention shall be borne by the CITY.

The chemical feed pumps at each application site shall provide an adequate discharge pressure to overcome friction losses in the chemical discharge piping and to overcome the maximum anticipated force main pressure at the point of application. The maximum anticipated force main pressures at each of the eleven potential application sites listed in Subsection 2.6 is provided in the table below (head is in reference to the force main invert elevation at the local site):

Application Site	Total Dynamic Head (feet)
Town Lift Station #1	0
Town Lift Station #5	70
City/District Bradley Creek Pump Station #35	0
District Lift Station #43	35
City/District Hewletts Creek Pump Station #34 Open Channel	0

Force Main Discharge---------- 125
City Pump Station #36---------- 60 (A)____(B)
Former City Pump Station #17---------- 50
District Lift Station #76---------- 0
District Lift Station #77---------- 0
City Pump Station #10---------- 0
District Lift Station #35---------- 15
District Lift Station #89---------- 0
District Lift Station #69---------- 0
District Ogden Park Dosing Station---------- 0

The parts of the Chemical Feed Pumps in contact with the chemical product(s) shall be durable and of proper materials resistant to chemical attack, and designed such that the chemical being pumped is totally isolated and sealed from the drive units of the pump. The pumps furnished shall include all accessories required by, the pump manufacturer for the specific chemical being pumped. The pumping units shall be adequately anchored to prevent movement.

The CITY will provide equipment at all sites identified herein. The OCCP CONTRACTOR has reviewed the sites and equipment and agrees that the equipment is fit and suited for the intended purpose. The OCCP CONTRACTOR shall notify the CITY immediately should the equipment fail in any manner.

2.7.2 Vapor Treatment Fans

Vapor control technology shall, as a minimum, correspond with existing Calgon Carbon Corporation technology, as may be recommended for renewal or replacement by the OCCP CONTRACTOR in recognition of improved technologies or adaptations to suit this project's conditions. These recommendations, including but not limited to complete technical details and costs (capital and O & M) shall be submitted to the CITY for approval prior to implementation. Vapor treatment system components have been sized for 4,500 cfm capacity or as otherwise needed to provide 12 air changes per hour for the entire connected volume for treatment; should project conditions dictate otherwise, the OCCP CONTRACTOR shall offer a system designed for those conditions.

Appropriate fans are to be supplied; one at each pump station. Each fan shall be of the centrifugal, belt-driven type construction, corrosion resistant fiberglass reinforced plastic. Fan shall be suitable for continuous 24-hour operation. Each fan shall operate such that no point on the fan curve requires more than the nameplate motor horsepower furnished. Minimum fan capacity shall be 4,500 cfm at 10" WC or as required for the specific service location. The fan housing and flanges shall be constructed of an FRP laminate consisting of an appropriate ultraviolet resistant and fire-retardant resin and the proper fiberglass or synthetic reinforcement capable of resisting continuous fume temperatures of 200 F. The fan manufacturer shall state the type of resin used and confirm that it will perform satisfactorily under the chemical operating conditions as specified herein. All interior surfaces exposed to the hydrogen sulfide gas shall be resin rich. Wheel and shaft assemblies shall be statically and dynamically balanced to a maximum of 3 mils displacement prior to fan assembly, in accordance with the standard test code for air moving devices and the assembled fan shall be tested prior to shipment. Fan mechanical run test data shall be submitted prior to shipping the fan. The fan shall be furnished with the following standard features:

1. Wheel: Multi-piece fiberglass construction bonded together With resin and fiberglass material.
2. Drive Assembly: Belts shall be oil, heat, and static resistant type, oversized for continuous duty. Shafts shall be turned, ground, and polished.
3. Bearings: Heavy duty, pillow block bearings with grease fittings.
4. Shafts: Constructed of heavy duty Type 316 stainless steel and provided with a sleeve constructed of fiberglass reinforced plastic.
5. Shaft seal: A fiberglass Neoprene shaft seal shall be installed where the shaft leaves the housing. The fan shall also be equipped with a Neoprene shaft slinger between the seal and wheel on belt drive units.
6. Base: Heavy gauge hot rolled steel, epoxy coated.

The fan shall also be furnished with the following accessories:

1. Flanged outlet, flanged or sprocket inlet
2. Drain
3. Access door
4. Vibration isolation system
5. Approved OSHA belt and shaft guard
6. Grounding per ASTM 04167

The fan shall have a single winding, explosion proof 1.15 service factor, TEFC, high efficiency, 480V, 3 phase, 60 Hz motor. Fan shall be provided with isolation tray.

Further, if having been determined that efficient vapor moisture content control is critical to effective vapor chemical treatment, the OCCP CONTRACTOR shall likewise submit its moisture control recommendations, including but not limited to complete technical details and costs (capital and O & M) to the CITY prior to implementing any installation or media replacement.

2.8 Chemical Treatment Controls

2.8.1. Liquid treatment

The CITY will provide the chemical feed controls as defined below. The CITY shall provide a maximum power supply of 480 volt, 60 Hz, three single phase through a 15 amp breaker terminating with a fused disconnect local to the OCCP equipment at a location to be determined by the CITY and OCCP CONTRACTOR. Alternatively, if desired, the CITY will provide either 120 v or 240 v power supply as directed by the OCCP CONTRACTOR. Beyond the CITY providing the basic power supply, the OCCP CONTRACTOR shall be responsible for any required transformer(s) to make additional power supplies available to any/all remaining OCCP system components. All such work will be performed by properly credentialed trades/contractors. Pump motor and controls shall be suitable for use in outdoor and corrosive environments. The CITY shall also furnish all controls for the pumps, furnished either as a part of each pump assembly or mounted immediately beside the pumping units within a separate free

standing enclosure. Each pump shall be operated by a three-position switch dedicated to that individual pump as follows: (1) "OFF" position, in which source voltage is continuously disconnected from the pump motor; (2) "HAND" position, in which the pump will operate continuously as long as the switch is in this position; and (3) "AUTO" position, in which pump operation is controlled either by a 96 position 24-hour time clock, graduated in 15-minute increments, of which each increment can be set as "OFF" or "ON" independently of all other increments, by interlock with process equipment, or by process instrument pacing. Control wiring for the "AUTO" circuit shall also be wired to a terminal strip in series with the time clock for potential future interlock with a control relay at a remote location.

A UL approved power cord for outdoor use with a plug for receiving a 480 volt weatherproof quick connect receptacle shall extend from the control panel for receiving power supply. The cord shall be of sufficient length to reach an outdoor receptacle up to 100 feet from the location of the equipment and shall be secured in conduit buried to the extent practicable to prevent tripping or similar hazards. All electrical wiring and control equipment shall be UL approved. lid separate control panel is furnished, it shall be suitably anchored and braced.

The OCCP CONTRACTOR has examined the existing chemical feed controls and agrees that they are fit for the intended purpose.

2.8.2 Vapor Treatment

Vapor control technology shall, as a minimum, correspond with existing Calgon Carbon Corporation technology, as may be recommended for renewal or replacement by the OCCP CONTRACTOR in recognition of improved technologies or adaptations to suit this project's conditions. These recommendations, including but not limited to complete technical details and costs (capital and O & M) shall be submitted to the CITY for approval prior to implementation.

Further, if having been determined that efficient vapor moisture content control is critical to effective vapor chemical treatment, the OCCP CONTRACTOR shall likewise submit its moisture control recommendations, including but not limited to complete technical details and costs (capital and O & M) to the CITY prior to implementing any installation or media replacement.

2.9 Chemical Storage Tanks

2.9.1 Liquid Treatment

The CITY shall provide the chemical storage tanks as defined below. The OCCP CONTRACTOR may elect to provide chemical storage tanks at each application site. The cost for OCCP CONTRACTOR supplied tanks is included in the costs referenced herein. The tanks shall be seamless or of continuously welded seams and shall be watertight. Depending upon the specific chemical being stored, acceptable materials include stainless steel, aluminum, high density cross-linked polyethylene or polyolefin or FRP, provided, however, that the material is of sufficient quality or purity to prevent reaction with the chemical being stored and of sufficient structural integrity to withstand the weight of the stored chemical when full without undue stress. The formulation of its materials of construction shall include stabilizers to enhance its properties and longevity with installation in an exterior environment. The tanks shall be placed above

ground on a flat surface, and shall contain hold-down lugs if necessary for stability when the tank is nearly empty. The capacity of each tank shall be determined by the OCCP CONTRACTOR and shall be sufficient to maintain chemical feed rates required for adequate hydrogen sulfide control between chemical deliveries.

Each tank shall include a threaded manway with suitable gasket to prevent leaking, shall be adequately vented to atmosphere through an integral floating vent cap and shall contain a fill line from the top of the tank and a combination drain line and pump suction line the tank bottom. In addition, delivery of hydrogen peroxide shall incorporate provision to introduce nitrogen for the purpose of purging any product remaining in the transfer line from the delivery truck to the storage tank. Chemical storage tanks shall not exceed ten (10) feet in diameter. Tanks installed at Town Lift Station #5, District Lift Station #43, shall not exceed eight (8) feet in height, and at other potential application sites made available by the CITY shall not exceed sixteen (16) feet in height.

If the chemical utilized requires regular mixing to prevent separation or stratification, the OCCP CONTRACTOR shall provide permanently installed mixing equipment to maintain storage tank inventory in a uniform consistency. This mixing equipment shall be independently mounted upon its own separate structural support; tank mounting of mixing equipment is not acceptable.

If the OCCP CONTRACTOR chooses to have dry granular chemical product delivered to application sites, the OCCP CONTRACTOR shall furnish all equipment and labor to store the granular product and to mix the granular product into solution with a very consistent concentration of the active constituent in each solution made- up. Attention required monitoring or maintaining this equipment shall be by the OCCP CONTRACTOR. Equipment which requires attention from CITY personnel will not be acceptable.

The OCCP CONTRACTOR has examined the existing chemical storage tanks and agrees that they are fit for the intended purpose.

2.9.2 Vapor Treatment

Vapor control technology shall, as a minimum, correspond with existing Calgon Carbon Corporation technology, as may be recommended for renewal or replacement by the OCCP CONTRACTOR in recognition of improved technologies or adaptations to suit this project's conditions. These recommendations, including but not limited to complete technical details and costs (capital and O & M) shall be submitted to the CITY for approval prior to implementation.

Vapor Reaction Chamber

The fiberglass reinforced polyester (FRP) vessel shall be fabricated in accordance with the American Society of Testing materials (ASTM) methods. They shall apply as follows:

1. ASTM 03299 - Fiberglass reinforced polyester chemical resistance.
2. ASTM 0833 -
3. ASTM 02583 -

Building Officials Code Administrators International (BOCA)
National Bureau of Standards (NBS)

1. NBS PS 15-69 relating to contact molded reinforced polyester chemical resistant process equipment.

Resin System

1. The resin utilized in the liner and the structure shall be a resin such as Hetron 922. Ashland Chemical Company or Atlac 580 (Koppers) or a similar resin manufactured by Dow Chemical.

2. The odor control manufacturer shall submit a certification for the resin stating that the resin is suitable for the intended service.

Fabrication

The following fabrication methods shall be strictly adhered to:

1. The resin and glass shall be applied to molds through the use of a low pressure airless delivery system to insure a uniform air-free laminate with proper resin-to-glass ratio as required for corrosive environments. Raw material deposition to molds shall be controlled by a programmable controller to ensure uniform glass-to-resin ratio.

2. Exothermic interruption shall be limited to four hours maximum between corrosion linear and structural layers.

3. All vessels shall meet or exceed requirements for acetone sensitivity.

4. All surface shall be prepared for full cure.

5. Filament fibers shall not be exposed.

6. The vessel shall be fabricated utilizing filament winding techniques. The corrosion liner shall be automatically fabricated using surface veil and resin system for maximum corrosion resistance. Reinforcement shall be commercial grade corrosion resistant borosilicate glass. Silane type surface finish and binder shall be compatible with the resin used. The inner corrosion layer shall not exceed 20%+/-5% glass by weight.

7. The inner corrosion barrier shall be followed by at least two layers of 1-1/2 oz. chopped strand mat or two passes of chopped roving to a total of 3 oz./sq.ft.

8. All edges of surface veils in wet layup shall be lapped a minimum of one inch. A separately cured unreinforced gel coat shall not be use.

9. Structural laminates shall contain not less than 55% or more than 65% glass by weight.

10. Manway covers shall be air tight at the pressure equal to or higher than the fan static pressure. The manway shall also be watertight.

Quality Assurance

The fabricator shall provide construction assurance documentation on each vessel. Information regarding material usage, Contract Document compliance, proper molding and applicable test data shall be maintained.

Testing

The following tests shall be performed on FRP samples from production:

1. Barcol Hardness
   Glass-to-resin ratio
   Burn test

2. Each vessel shall be filled with water to the overflow level and allowed to stand for 24 hours. No leaks will be permitted.

Single Bed FRP Carbon Absorber

Each carbon absorber shall be constructed of FRP. The vessel shall be fabricated in accordance with the standard codes listed under "references." The carbon absorber shall meet the following performance and dimensional criteria or other requirements consistent with other capacities or new applications/installations:

1. Capacity:	4,500 cfm
2. Diameter:	8 ft.
3. Overall Height:	10 ft.
4. Total Carbon Capacity	5,300 lbs.
5. Vessel Operating Weight	8,045 lbs. max.
6. Vessel Pressure Loss	10.0" max

The carbon absorber tower shall include flanged connections as specified below and as indicated on the Drawings:

SERVICE	QUANTITY	SIZE
Gas Inlet	1	18"
Gas Outlet	1	18"
Manway	2	32"
Overflow	1	2"
Drain	1	2"

Each carbon absorber shall include the following NPT threaded coupling or union connection, as shown below.

SERVICE	QUANTITY	SIZE
Pressure Taps	2	1/2"
Sample Ports	3	1-1/2"
Grounding Rod	1	3/8"
Air Sample Port	1 per inlet/outlet	1/2"

Each carbon absorber shall include anchorage and be designed to exceed the seismic requirements as specified in BOCA for all conditions. The odor control manufacturer shall

submit calculations to the Engineer showing that the vessels and anchorage have been properly designed and include calculations that shall be signed and sealed by a Professional Engineer. Each absorber shall be furnished to accommodate a single bed of activated carbon having an average depth of three feet. The carbon bed shall be supported on a polypropylene screen through a support system. The screen and the grating used for the support system shall be removable through an access manway. The support system shall consist of removable grating, beams, and columns. Pall rings or other dumped packing media as a means of carbon support will not be acceptable. The support system shall be designed to withstand a load of at least 150 lbs./sq.ft. with a minimum deflection of 1/4" under all conditions. The odor control system manufacturer shall submit calculations verifying compliance of the requirements. All calculations of the carbon support system shall be signed and sealed by a Professional Engineer.

CARBON ABSORBER VESSEL ACCESSORIES

Each carbon absorber vessel shall include the following accessories:

1. Manometer: A Dwyer Series 1230 or Series 2000 Magnehelic Gauge manometer, or equal, shall be provided to continuously monitor the pressure drop across the carbon bed.

2. Sample probes: Each vessel shall have three 1-1/2" diameter sample probes per bed which shall extend into the bed a minimum of twelve inches. The sample probes shall be adequate to provide suitable extraction of carbon samples from the carbon bed. The sample probes shall extend outside the vessel wall and shall be blocked off with a ball valve construction of PVC. A sampling tool for extraction of carbon sample shall be provided by the OCCP CONTRACTOR.

3. Grounding rod: A stainless steel rod shall be provided to adequately ground each carbon bed. Details in the form of past experiences or calculations demonstrating that the carbon bed will be adequately grounded shall be submitted to the Owner.

4. Carbon screen: A polypropylene sewn screen shall be provided to support the carbon.

5. Gaskets: 1/8" thick full face Neoprene.

6. Hardware: All hardware shall be Type 316 stainless steel.

7. Hold down: Type 316 stainless steel

8. Lifting lugs: Type 316 stainless steel

Further, if having been determined that efficient vapor moisture content control is critical to effective vapor chemical treatment, the OCCP CONTRACTOR shall likewise submit its moisture control recommendations, including but not limited to complete technical details and costs (capital and O & M) to the CITY prior to implementing any installation or media replacement.

2.10 Piping and Appurtenances

2.10.1 Liquid Treatment

The CITY shall provide the piping and appurtenances as defined below. All rigid suction and discharge piping, valves, fittings, and connectors shall be 316 stainless steel durable/resistant to external forces for withstanding anticipated line pressures and for chemical resistance. Where the chemical has a tendency to coat the interior pipe walls, flexible rubber hose may be used to terminate exposed discharge line within sewage chambers operating under atmospheric conditions in order to facilitate cleaning/de-blocking activities. Piping and joints shall be installed to prevent leaking under pump pressure and shall connect the suction line from the tank to the suction end of the chemical feed pumps as well as connect the discharge end of the pumps to the appropriate discharge point. Ball valves and unions shall be provided on both suction and discharge piping near the pump to permit easy removal or replacement of the pump. A pressure gage appropriately calibrated for site conditions shall be mounted near the discharge side of the pump. and a backpressure valve provided with pressure set according to the pump manufacturer's recommendations. A branch line shall be connected to the suction piping between the suction ball valve and the pump's suction check valve with a normally closed ball valve and a vertically mounted graduated cylinder of capacity sufficient or comparable suitable temporary device for calibrating actual pump settings for the given site. Locations using chemical(s) exceeding the maximum concentrations per Paragraph "**2.5.3 Chemical(s) Allowances**" shall be provided with a water source and piping for dilution water to the chemical(s) being fed. Such carrier water shall be capable of diluting hydrogen peroxide, as delivered, to a concentration of less than 30% to 35% grade by weight measured at the point of injection. An emergency eye wash/shower station meeting OSHA requirements shall also be provided. Where readily available, a 3/4" water source with a RPZ backflow prevention device at 40 PSI pressure will be provided by the jurisdiction responsible for the site at each location specifically listed in Section 5. Water service for application sites furnished by the OCCP CONTRACTOR shall be provided by the OCCP CONTRACTOR.

With the exception of existing dosing lines located at Town Lift Station #1 and #5, all buried chemical piping shall be stainless steel encased in a second larger thermoplastic pipe to contain lost product and to facilitate product line replacement, with a sensing device between the two pipes to detect leakage from the inner pipe. The space between the pipes shall be sealed at both ends to prevent the entry of condensate which may result in a false alarm. An alarm light or similar signaling device shall be furnished to alert attending staff of a leaking condition. Failure of any single containment piping which results in product loss will be replaced in its entirety with a new secondary containment piping system.

The OCCP CONTRACTOR has examined the existing piping and appurtenances and, with the exceptions noted in the previous paragraphs, agrees that they are fit for the intended purpose.

2.10.2 Vapor Treatment

Vapor control technology shall, as a minimum, correspond with existing Calgon Carbon Corporation technology, as may be recommended for renewal or replacement by the OCCP CONTRACTOR in recognition of improved technologies or adaptations to suit this project's conditions. These recommendations, including but not limited to complete technical details and costs (capital and O & M) shall be submitted to the CITY for approval prior to implementation.

Ductwork

The odor control system manufacturer shall provide the necessary ductwork as follows:

1. Outlet ductwork between absorber and the termination above mechanical building roof.

2. Inlet ductwork between absorber and the fan.

3. Inlet ductwork between fan and the termination in the pump station wet well.

The FRP ductwork shall be fabricated using the hard layup or filament wound method in accordance with NBS PS 15-69, and meet ASTM 03299 requirements for filament wound duct. The ductwork shall be designed for at least 10" WC in accordance with NBS PS 15-69. The resin shall be a premium vinyl ester resin such as Hetron 922 as manufactured by Ashland Chemical, Derakane 411 as manufactured by Dow Chemical, or equal. A paraffin wax coating with U.V. inhibitor shall be applied on the outside. The inner corrosion barrier shall be followed by not less than two layers of 1-1/2 oz. chopped strand mat or two passes of chopped roving. The inner corrosion barrier plus the two mat layers shall be 100 mils minimum and be approximately 27% +/-5% by weight, per ASTM 02584. No Thixotropic agents shall be added. All hardware shall be stainless steel. Gaskets shall be 1/8" thick, full face, Neoprene suitable for the intended service. Any ductwork installed outdoors shall be U.V. stabilized. Elbows and tees shall be smooth-flow non-mitered. All factory connections shall be butt joint. All weld connections shall be bell-and-socket or flanged. All butt joints shall be reinforced with an overlay of glass fiber and resin to at least the thickness of the heaviest piece being joined. The ductwork shall be suitable for service in a saturated hydrogen sulfide atmosphere. Ductwork fittings (elbows) shall be sized and configured as required to meet space and clearance limitations shown on the drawings. Ductwork supports shall be fabricated from FRP or Type 316 stainless steel. Supports shall be designed to allow for expansion and contraction of the ductwork system. Connection to FRP duct shall be made by FRP or Type 316 stainless steel strap around duct. Attachment to FRP duct shall not compromise FRP integrity by screw, bolt, or other fasteners bearing directly on the FRP duct. Penetrations of ductwork through concrete shall be sealed watertight using methods and materials approved by the Owner. Furnish and install suitable transition pieces to connect ductwork to fan inlet and outlet.

Flexible Connectors

Flexible connectors shall be included with the ductwork to dampen axial and lateral vibrational duct movement.

Dampers

Furnish and install, in the duct between fan and absorber unit, a manual control damper meeting the following requirements:

1. The dampers shall be round FRP, flanged and drilled in accordance with NBS PS 15-69 standards. The damper shall be designed to withstand 15" WC pressure. The blade thickness shall be as required by the damper manufacturer. Fiberglass axels shall extend full length of blade and six inches beyond frame. The unit shall be

equipped with a full circumference blade seal, to limit leakage to less than 3 cfm/sq.ft. at 10" WC, and the shaft seal. Leakage test and performance data shall be submitted to Engineer by an Engineer-approved testing laboratory.

Grease Filter/Mist Eliminator

A grease filter/mist eliminator shall be furnished and installed. This unit shall consist of two woven PPL filter pads housed inside a Type 316 stainless steel enclosure. The pads shall be removable for cleaning. This unit shall ship loose and be ready for installation into the odor control system supply ductwork. The housing shall be flanged and drilled, and come complete with gaskets, ready for installation. The filter/eliminator unit shall be an ACS Industries Style 7CA mesh pad assembly with housing, or equal. The unit must come in a suitable FRP housing to allow for proper velocity slow down of air through system.

Further, if having been determined that efficient vapor moisture content control is critical to effective vapor chemical treatment, the OCCP CONTRACTOR shall likewise submit its moisture control recommendations, including but not limited to complete technical details and costs (capital and O & M) to the CITY prior to implementing any installation or media replacement.

2.11 Delivery of Chemical

Products shall be shipped either in bulk for transfer into vessels located at various application sites or in approved-supplier certified- weight shipping containers.

Delivery scheduling and response shall be arranged by the OCCP CONTRACTOR to prevent the interruption of odor and corrosion control services. The OCCP CONTRACTOR shall provide the CITY with a delivery routing plan used by the chemical supplier to each application site. A traffic control plan shall also be provided by the OCCP CONTRACTOR for sites that require the unloading of chemical(s) in the street's right-of-way. A time shall be arranged in advance with the CITY when delivery will be made and security clearance will be provided at the delivery site by the CITY. Deliveries shall be made in vehicles operated by the Supplier or a carrier approved by the CITY; deliveries in commercial vehicles which have not been approved by the CITY will not be accepted. The bulk shipment delivery vehicle shall report to the North Carolina State Ports Authority terminal in Wilmington or other state authorized/ recognized/certified location within the CITY, using the same scale for the entire delivery, both before any chemical product is delivered to the CITY and after all chemical product is delivered to the CITY and shall be weighed on truck scales at this location. The driver shall obtain a written ticket at the Authority certifying the weight both before and after deliveries. The OCCP CONTRACTOR shall notify the CITY in advance of the application sites where deliveries will be made such that the CITY may elect to have a representative present to witness delivery. As applicable, the OCCP CONTRACTOR shall record the volume of product delivered at each application site, and if delivery is witnessed by a CITY representative, the representative's signature shall be recorded beside the volume as an acknowledgement of agreement with the volume recorded. A copy of the record of volume of deliveries by site, and a record of total weight before and after all deliveries shall be submitted to the CITY. The CITY will not include in payment deliveries for which these conditions have not been met.

The OCCP CONTRACTOR shall include among the services of this Agreement, the collection and laboratory analysis of six samples of chemical product used for odor and

corrosion control. The collection of samples shall be made at the time of delivery of chemical to an application site; the date and site shall be selected by the CITY. The samples shall be analyzed for conformance with all product specifications, including purity (active constituents), all metals listed above, and all impurities referenced in the product standards. The CITY may delay notification of the desired date until the specific delivery is enroute to the scheduled application site. Analysis shall be performed by an independent laboratory acceptable to the CITY and a copy of the analysis results delivered to the CITY on report forms directly from the laboratory. The method of sample collection shall conform to the procedure in the referenced product standard.

The CITY shall be permitted to sample the product from the tank at any time for analysis by an independent certified laboratory. Laboratory testing may include both active constituents and contaminants which are restricted by the product specifications.

If the product should fail to meet the required specifications, the CITY may require the defective product to be discontinued from use and promptly removed from the application site and replaced with an equal quantity of acceptable product at no cost to the CITY. The CITY shall also have the option, depending on the severity and potential consequences of the product defectiveness of contamination, or in the event the OCCP CONTRACTOR fails to correct the defectiveness in subsequent deliveries, to terminate the contract with cause.

In the event of a dispute between the CITY and OCCP CONTRACTOR over whether a product delivery was defective or not, the procedures stated in AWWA Standards for "refereeing" the dispute shall be followed. A sufficient number of samples shall be collected at the time of sampling to carry out this procedure if required.

The OCCP CONTRACTOR shall be responsible for compliance with all federal, state, and local laws and regulations with respect to transportation and delivery of this product. The OCCP CONTRACTOR shall hold the CITY harmless from claims resulting from the acts or negligence of the OCCP CONTRACTOR (or by any person acting for the OCCP CONTRACTOR or for whom the OCCP CONTRACTOR is responsible) in transport or during delivery, including product spillage at the application site during delivery. Upon completion of transfer of product from the delivery tanker to the storage tank, and leaving sufficient room for expansion, contraction, and line purging, the OCCP CONTRACTOR shall blow down the transfer line with nitrogen to purge residual product into the storage tank.

2.12 Training and Technical Assistance

Technical service shall be comprised of inventory management, equipment maintenance (labor only; parts by/through the CITY), treatment optimization, testing, monthly reports, and 24 hour emergency service.

The OCCP CONTRACTOR shall conduct a training session on an annual basis through a factory trained representative to describe safety precautions and procedures, periodic observations recommended by CITY personnel, and emergency procedures, including how to shut down the OCCP CONTRACTOR'S equipment. The purpose of this training is to permit designated CITY, Town, or District personnel to respond to an emergency if one should occur with the product or OCCP CONTRACTOR'S equipment on CITY property and to use safe practices when performing other work near the equipment. Up to three (3) hours shall be allowed by the OCCP CONTRACTOR for this training and for the answering of questions from representatives of the CITY.

For all new sites provided by the OCCP CONTRACTOR, technical information describing all component equipment, including drawings of individual parts and assembly and maintenance instructions, shall be furnished to the CITY. Such information shall include schematics of piping and all electrical controls.

During the time of this contract, the OCCP CONTRACTOR shall provide a qualified technician to report to the chemical treatment sites and treatment plants at least three times per week, and more often as necessary to perform the following functions: (1) inspect the operation and condition of all equipment and provide any equipment maintenance necessary; (2) inspect the level of all storage tanks to compare with anticipated levels based on pump setting during the previous visits, and to schedule the next required product delivery; (3) to perform sampling and testing of wastewater at different times during the day to verify that the odor and corrosion control requirements of this contract are being met without overfeeding of chemical at all times of the day including early morning flows; and (4) to adjust pump feed rates and pump on timers for updated optimized cost-effectiveness and to check the calibration of all pumps using the calibration column to insure that the actual pumping rate equals the new desired rate. The OCCP CONTRACTOR shall maintain optimized control at all times of the day, and shall take into account changes in flow patterns on weekends and holidays. The OCCP CONTRACTOR shall maintain logs of tank levels at each application site, pump settings and time on, and all test data collected.

The vapor phase chemical treatment system shall be initially balanced by the OCCP CONTRACTOR for proper hydraulics within rated design capacities. System inlet and outlet characteristics and chemical/media condition shall be determined initially and as frequently as necessary (but at least once annually) on an ongoing basis by the OCCP CONTRACTOR to establish pollutants of concern, proper media selection, and projected need for media replacement.

The OCCP CONTRACTOR shall respond to a request from the CITY by providing technical assistance on-site within twenty-four (24) hours of notification to correct problems which arise between scheduled visits resulting from malfunction of the OCCP CONTRACTOR'S equipment or conditions which indicate that process adjustments are not optimized. The CITY may independently collect samples to confirm that the performance requirements of this agreement are being met and will request additional technical assistance when reasonable data is collected which concludes that concentrations of pollutants of concern or chemical product residual exceeds the performance requirements.

Using manufacturer's references and CITY staff experience, the OCCP CONTRACTOR shall develop a specific schedule of planned maintenance activities (preventive maintenance). Once approved, the OCCP CONTRACTOR shall perform preventive maintenance and maintain records documenting adherence with a goal of minimizing corrective maintenance. The OCCP CONTRACTOR shall monitor all OCCP equipment for effective, efficient, and economical performance and shall periodically check all systems for availability. The OCCP CONTRACTOR shall stock sufficient spare equipment or equipment components to assure continuity of operations/service and expedited restoration of service in the event of any failure. Excessive corrective maintenance efforts associated with correcting premature deterioration or failure of components attributed to inattention, accident, error, or negligence in operation or preventive maintenance shall be the responsibility of the OCCP CONTRACTOR.

In the event of equipment failure, the OCCP CONTRACTOR shall service and repair or replace equipment, at his option, as necessary to limit the time in which contract odor and

corrosion control conditions are not optimized to not greater than 48 hours. Permanent equipment replacement shall require approval by the CITY. During the time repair is being made, the OCCP CONTRACTOR shall increase capacity of remaining equipment as necessary to eliminate the possible release of odors within the control segment during repairs. When equipment cannot be repaired on-site within the 48-hour limit, it shall be replaced with another unit until repairs can be completed.

The OCCP CONTRACTOR shall promptly respond to any report of chemical leakage. The source of the leakage will be promptly determined and corrected by such temporary and/or permanent means as may be available and necessary to halt the leakage, clean up the leakage, and restore service. If contained and deemed to be acceptable for use by the OCCP CONTRACTOR, spilled/contained chemical can be returned to storage; if deemed unacceptable, spilled/contained chemical or any other contaminated debris associated with uncontained spillage shall be replaced and/or disposed as required. Unless determined to be beyond the reasonable control of the OCCP CONTRACTOR, such costs will be borne by the OCCP CONTRACTOR.

2.13 Leak Detection/Containment

As part of the initial mobilization charge, the OCCP CONTRACTOR shall install secondary containment and leak detection at each site identified herein.

The leak containment system shall consist of a concrete structure and chemical – resistant coating or other containment system capable of containing a spill the size of the tank at each location.

The leak detection system shall consist of monitoring devices and automatic relays to notify the proper authorities in case of a spill.

2.14 Contract Transition Period

Unless otherwise documented to the contrary, existing dosing sites utilizing chemical products up to and including the effective date of this contract shall be presumed to be meeting specific standards of performance specified within the previous contract for the entire system under contract. The proposed OCCP system shall be capable of/expected to maintain/attain standards of performance set forth within this contract, but in no case provide less than documented conditions in evidence within the entire system under control at expiration of the previous contract.

Prosecution of this contract may involve a different approach or strategy to odor corrosion control than that which existed under the preceding agreement. This approach may involve use of treatment principle, treatment chemicals, and/or dosing sites different from those used within the preceding agreement. As a component of this proposal, the OCCP CONTRACTOR shall prepare and submit a detailed description of all treatment chemicals, all dosing sites, and how they will be integrated together into and controlled within a comprehensive odor corrosion control program for the CITY.

In order to enable an orderly transition to the proposed OCCP, the OCCP CONTRACTOR shall be provided a 90 day transition period. The OCCP CONTRACTOR shall immediately assume control of all existing OCCP systems and operate, maintain, monitor, and control them to fully and immediately maintain compliance with contract performance standards. In accordance with his approved plan, the OCCP CONTRACTOR shall undertake any and all

actions necessary to result in the proposed OCCP system, including but not limited to temporary or permanent operation of existing systems, modifications to existing systems, temporary or permanent commissioning of new systems, decommissioning of any existing systems no longer deemed necessary within the OCCP CONTRACTOR's proposal to achieve contracted performance standards, and salvage and relocation of any decommissioned systems or system components still possessing service life to new applications so as to attain maximum use of existing OCCP equipment.

2.15 Thirty Day Demonstration Period

From the date of service initiation, and following a 90 day contract transition period, the OCCP CONTRACTOR shall have a thirty (30) day demonstration period during which the OCCP CONTRACTOR shall provide sufficient technical services to optimize chemical treatment and achieve the performance requirements of this agreement. If these requirements are not met and maintained within the fourteen days as defined in Section **2.5.4**, and/or unusual circumstances exist, the CITY may extend the demonstration period an additional seven (7) days. At the end of the demonstration period, if the performance requirements are not being met, the CITY may terminate this agreement and require the OCCP CONTRACTOR to remove all equipment at no cost to the CITY for demobilization.

2.16 Management Reporting and Technical Recommendations

The OCCP CONTRACTOR shall deliver to the CITY by the l5th of each month a monthly management report summarizing the activities of the previous month. This report shall include the dates when technical services were provided, copies of all field data logs and shall identify starting inventory, deliveries made, ending inventory, quantity of chemical used, results of all sampling and testing, and equipment malfunctions and maintenance. The report shall also summarize any unusual observations or conclusions and shall make recommendations when changes are appropriate to further improve odor and corrosion control or to provide more cost-effective services. The report shall also itemize and monitor expenditures on a monthly, annual, and contract basis.

2.17 Exhausted Media Replacement/Disposal:

The OCCP CONTRACTOR will provide periodic analysis on the media in vessels within the program, both present and future, to establish exhaustion rates and provide data concerning the efficiency of media chosen. Each vessel will be tested annually included within this contract's service fees; if required and authorized by the CITY, the cost of additional testing will be as defined in Section 4.

When testing indicates a need for media replacement the OCCP CONTRACTOR shall notify the CITY of this determination at least thirty (30) days prior to projected replacement. Based upon periodic test results, the OCCP CONTRACTOR shall recommend either replacement-in-kind or substitution of a more effective treatment chemical/media. The OCCP CONTRACTOR shall make all arrangements to test, remove, and dispose of exhausted media in the most economical manner available. Spent media classified as nonhazardous, shall be tested, removed, and disposed in accordance with pricing defined in Section 4. If classified hazardous, the OCCP CONTRACTOR shall develop and submit for the CITY authorization supporting documentation including but not limited to its basis for hazardous classification and an itemized breakdown of costs associated with this material to be reimbursed at a cost not to exceed actual cost plus 20%. Spent media shall be segregated so as to minimize the amount of material affected and/or cross contaminated and necessitate

the disposal as hazardous.

3. Term of Agreement

The OCCP CONTRACTOR agrees to furnish the work and services stated herein within thirty (30) calendar days after receiving authorization to proceed from CITY (authorization is expected to be issued at the time contract execution is complete). The OCCP CONTRACTOR shall then maintain all services required by this contract for up to thirty-six months form the date of contract execution, unless services are terminated under provisions stated in section 9.

Subject to the provisions of section 3.2, this agreement shall have an initial term of thirty-six (36) months commencing January 1, 2004. The City and the OCCP CONTRACTOR shall have the option to renew this agreement for two separate twelve (12) months' periods following the initial thirty-six month term and with the written consent of both parties. The procedure for renewal shall be as follows:

3.1.1 If the OCCP CONTRACTOR desires to renew this agreement for an additional twelve (12) month, the OCCP CONTRACTOR shall notify the City not later than 180 days prior to the expiration of the initial term of this agreement or any renewal term as the case may be. The OCCP CONTRACTOR shall then provide written notice to the CITY not later than 60 days prior to expiration of any proposed changes in the prior year's fee schedule as set forth in section 4.0 to apply to the entire subsequent year. All other fees under this agreement shall remain the same during any renewal term.

The City shall then have the option to accept renewal, including any proposed changes in fees, or the option to reject the renewal by written notice to the OCCP CONTRACTOR within 30 days after receipt of the Contractor's notice of intent to renew. If the City accepts renewal, all conditions including the fee schedule for the subsequent year shall be binding on the OCCP CONTRACTOR upon receipt of the City's written acceptance for the full twelve (12) month period.

3.2 From the date of service initiation, the OCCP CONTRACTOR shall have a ninety (90) day transition period during which the OCCP CONTRACTOR shall provide sufficient services to achieve the performance requirements of this agreement. If these requirements are not met and maintained and/or unusual circumstances exist, the CITY may extend the transition period into the 30 day demonstration period in order to document achievement of specified performance requirements. At the end of the demonstration period, if the performance requirements are not met, the CITY may terminate this agreement and require the OCCP CONTRACTOR to cease all operations at no cost to the CITY for demobilization.

In the event that review of the OCCP CONTRACTOR's performance shows nonconformance to the work required by this contract, the scope of services or other terms and conditions contained herein as a result of the contractor's errors, omissions, or negligent acts, the OCCP CONTRACTOR shall be in breach of this agreement and the CITY make take corrective action as it deems necessary including, but not limited to, withholding or reduction of payment.

The CITY shall also have the right to suspend this agreement upon written notice to the OCCP CONTRACTOR. Such written notice shall state the reasons for

suspension and allow for a review period of ten (10) days during with the OCCP CONTRACTOR shall be provided with an opportunity to respond with an explanation or justification, and/or shall undertake any reasonable remedial action required by the CITY. If, in the opinion of the CITY, the OCCP CONTRACTOR remains in violation of this agreement at the completion of the ten (10) day suspension period, the CITY shall have the right to terminate this agreement whereupon all obligations of the CITY to the OCCP CONTRACTOR shall cease. The OCCP CONTRACTOR may be allowed to continue operations during the suspension upon written consent from the CITY.

In the event this project is terminated prior to completion of the services by the OCCP CONTRACTOR, the OCCP CONTRACTOR shall be paid for services performed to the date of termination. (In no event will the amount due the contractor exceed that amount set forth in paragraph 4.0 of this agreement. The OCCP CONTRACTOR shall be paid for all reimbursables, as defined herein, which are due him.)

Should changed conditions affect the ability of either the CITY or the OCCP CONTRACTOR to comply with all terms and conditions of the contract or identify the need for additional services the CITY and the OCCP CONTRACTOR may elect to attempt resolution of these issues through negotiation. Failure of these parties to resolve handling of changed conditions to their mutual satisfaction may result in the CITY seeking a full contact termination or a partial contract termination involving contested services while retaining the OCCP CONTRACTOR to perform all other non-contested services. The CITY shall be free to engage other sources of service to execute work deleted from the OCCP CONTRACTOR's scope of services through partial contract termination, and services not specifically identified within this contract. Should condition of partial contract responsibilities/partial contract termination not be acceptable to the OCCP CONTRACTOR, and full contract termination be desired, it shall so notify the CITY of such intent in writing which shall be considered its one-hundred eighty (180) day notice.

Nothing contained herein shall prevent the CITY from pursuing any other remedy which it may have against the OCCP CONTRACTOR including claims for damages.

In the event that either party is unable to perform any of its obligations under this agreement because of any event which is unavoidable and beyond the control of the affected party, (hereinafter referred to as "Force Majeure Event") including but not restricted to: (1) a labor stoppage, strike action or unrest; (2) a judicial or administrative decree, regulation direction, change in law or threat of initiation of any legal action not the fault of the party who has been affected; (3) communication line failure: (4) power failure; (5) power surge, and (6) any natural disaster or action of GOD, the party who has been so affected shall immediately give written notice to the other party and shall be excused from full performance as long as it is diligently pursuing all reasonable means to eliminate or mitigate the effects of the Force Majeure Event. If the period of nonperformance exceeds fifteen (15) days form the receipt of notice of the Force of Majeure Event, the parties shall attempt to negotiate revised terms which would allow this agreement to continue. In the event such good faith negotiations are unsuccessful after fifteen (15) day negotiating period, the affected party may

terminate this agreement and, in such case, the affected party shall have no further obligation to the unaffected party.

4.0 Pricing Schedule

The following is a schedule of fees for compensation by the CITY to the OCCP CONTRACTOR based upon the satisfactory performance of the services under this agreement.

	Year 1	Year 2	Year 3
1. Contract Transitioning (Cost/Month)	$1,850.00	$1,850.00	1,850.00

Note: Costs are per month for the entire 3 years of the contract and represent all chemical and technical costs.

2. Mobilization (Cost/Site)			
A.. Liquid Phase Treatment			
1 - 2 Concurrent Installations	$15,600.00	$17,160.00	$18,876.00
3 - 5 Concurrent Installations	$15,000.00	$16,500.00	$18,150.00
B. Vapor Phase Treatment			
1 - 2 Concurrent Installations	$5,500.00	$6,050.00	$6,655.00
3 - 5 Concurrent Installations	$4,000.00	$4,400.00	$4,850.00
C. Instrumentation			
1 - 2 Concurrent Installations	$1,500.00	$1,750.00	$2,500.00
3 - 5 Concurrent Installations	$1,500.00	$1,750.00	$2,500.00
3. Demobilization (Cost/Site)	$750.00	$750.00	$750.00
4. Technical Services (Cost/Site/Month)			
A. Liquid Phase Treatment System	$525.00	$525.00	$525.00
B. Vapor Phase Treatment System	$525.00	$525.00	$525.00
C. Instrumentation	$350.00	$350.00	$350.00
5.. Chemical Product			
A. Hydrogen Peroxide (Cost/Pound Solution)			
1. Fixed Unit Price	$0.191	$0.201	$0.216
2. Indexed Unit Price	N/A	N/A	N/A
B. Granular Activated Carbon (GAC) (Cost/Pound Virgin) (Caustic Impregnated)	$4.17	$4.59	$5.05
C. Potassium Permanganate (Cost/100 Pounds)	$160.00	$175.00	$195.00
D. Magnesium Hydroxide (cost/pound)	N/A	N/A	N/A
6. Equipment Rental (Cost/Site/Month)			
A. Liquid Treatment System	$750.00	$750.00	$750.00
B. Vapor Treatment System (Includes 6,500 Barnebey Sutcliffe ST 1-X)	$4,500.00	$4,500.00	$4,500.00
C. Instrumentation	$50.00	$50.00	$50.00

	Year 1	Year 2	Year 3
7. Equipment Purchase			
A. Liquid Treatment System	$18,000.00	$18,500.00	$19,000.00
B. Vapor Treatment System (Includes 6,500 Barneby Sutcliffe ST1-X)	$100,000.00	$105,000.00	$110,000.00
C. Instrumentation (Telemetry systems)	$5,000.00	$5,500.00	$6,000.00
Doubled-Contained Dosing Lines (Cost/Foot) (Fittings Extra)	$15.00	$15.00	$15.00

8. Equipment Depreciation (Cost/System/Month)			
A. Liquid Treatment System	$300.00	$300.00	$300.00
B. Vapor Treatment System	$1,500.00	$1,500.00	$1,500.00
C. Instrumentation	$100.00	$100.00	$100.00
9. Miscellaneous Services			
A. GAC Exhaustion/Replacement/Analysis	$350.00	$350.00	$350.00
B. Testing, Removal, Disposal/Exhausted Non-Hazardous GAC	$0.79	$0.89	$0.99
C. GAC Replacement (Disposal of Exhausted GAC, Replacement with New GAC)	$1.10	$1.16	$1.22

4.1 Contract Transition Period Costs

Regardless of continuation by the current OCCP CONTRACTOR or designation of a new OCCP CONTRACTOR, the OCCP CONTRACTOR shall provide pricing for ALL required goods and services for the 90 day transition period.

The OCCP CONTRACTOR shall factor in all costs to assume control of all existing odor corrosion control facilities and have all odor corrosion facilities identified within his proposal and this contract available within 90 days. The OCCP CONTRACTOR shall make maximum use of decommissioned existing systems no longer required under this contact by relocating them to new sites if compatible and possessing remaining service life. These costs will be defrayed as a monthly fee over the 36 month term of the contract.

4.2 Mobilization and Demobilization of Equipment

Lump sum fees shall be payable to the OCCP CONTRACTOR for mobilization and demobilization of future leased or purchased equipment. Equipment shall include items as indicated in Appendix C and includes secondary containment. The CITY shall review and approve the need for such improvements before installation by the OCCP CONTRACTOR. Should the CITY elect to provide the containment provisions, the OCCP CONTRACTOR shall provide its construction supervision without additional charge.

Mobilization includes complete installation of all equipment, including secondary containment walls for the liquid treatment chemical storage and feed equipment, leak detection and remote monitoring equipment. Said mobilization specifically excludes costs of installing double contained dosing lines with leak detection, which if required be provided at pricing specified in the pricing schedule.

Demobilization shall also include returning the site to the original condition, normal wear and tear excepted.

4.3 Technical Services

Technical services fees in amounts specified on the pricing schedule shall be payable to the OCCP CONTRACTOR for the satisfactory performance of all technical services as provided in Paragraphs 2.12 and 2.13 of this Agreement. The fee shall become due on a monthly basis promptly upon receipt by the CITY of an invoice for such services from the OCCP CONTRACTOR.

4.4 Chemical Product

Unit prices shall be payable to the OCCP CONTRACTOR for the delivery of chemical product to application sites for odor and corrosion control, provided the chemical product meets all requirements of this Agreement. The prices shall be guaranteed by the OCCP CONTRACTOR for the initial term of this Agreement. The OCCP CONTRACTOR shall invoice the CITY not more frequently than monthly and shall provide copies of the "trip" tickets with each invoice.

Hydrogen Peroxide	Cost per pound solution in Year 1 at a minimum of 50% but not to exceed 52% H2O2 by weight. Cost per pound solution in Year 2 at a minimum of 50% but not to exceed 52% H2O2 by weight. Cost per pound solution in Year 3 at a minimum of 50% but not to exceed 52% H2O2 by weight.
Potassium Permanganate	Cost per 100 pounds total potassium permanganate delivered as 98% by weight. Years 1,2 and 3
GAC	Cost per pound/virgin/delivered and placed. Years 1,2 and 3
Magnesium Hydroxide	Cost per gallon in Year 1 at a minimum 60% but not to exceed 65% by weight. Cost per gallon in Year 2 at a minimum 60% but not to exceed 65% by weight. Cost per gallon in Year 3 at a minimum of 60% but not to exceed 65% by weight.

Alternatively, the OCCP CONTRACTOR may offer chemical pricing based upon an industry-accepted/recognized index. An initial product price and index value will be identified; subsequent pricing will be adjusted on a monthly basis or as frequently as it is updated and issued with changes in the index.

The OCCP CONTRACTOR shall document the source of the index, who is responsible for initially originating it, who is responsible for its ongoing maintenance, where it is publicly published/available and factors/principles essential to its computation. The OCCP CONTRACTOR shall produce an objective affidavit from the Chemical Manufacturers Association or other representative professional trade association attesting to its viability. In the event the index may be discontinued, the CITY may accept use of another index, revert to the lump sum annual pricing schedule, or terminate the contract.

In support of the validity and use of this index, the OCCP CONTRACTOR shall provide a 60 month (1999-2003) profile of standardized chemical cost basis and corresponding index values.

In the event during a given month a chemical residual is detected at the end of a control segment which exceeds the performance requirements of this Agreement, the CITY may withhold 5% of the amount owed for chemical deliveries to the appropriate upstream application site. This amount withheld is agreed by the OCCP CONTRACTOR and the CITY to be liquidated damages and not a penalty for the product which has been "overfed" during the contract month. This amount is fixed and agreed upon by and between the OCCP CONTRACTOR and the CITY because of the

impracticability and extreme difficulty of fixing and ascertaining the actual damages the CITY would in such event sustain, and said amount is agreed to be the amount of damages which the CITY would sustain. The assessment of liquidated damages does not relieve the OCCP CONTRACTOR of any other consequences for nonconformance stated in this Agreement.

4.5 Equipment Rental

At its option, the CITY may provide equipment as defined in this Agreement. If the CITY chooses not to do so then the following monthly fees shall be payable to the OCCP CONTRACTOR for rental of equipment while the equipment is operational at the listed application sites below. Equipment shall be that as defined in sections **2.6** through **2.10** and appropriate safety features and shall be consistent with the design indicated in Appendix C.

	EQUIPMENT RENTAL (Cost/System/Month)	EQUIPMENT PURCHASE Appendix C/Equipment Only
Liquid Treatment System (Appendix C equipment)		
Vapor Treatment Systems only; sized/priced for 4,500 cfm capacity; should project conditions dictate otherwise, the OCCP CONTRACTOR shall offer suitably sized/comparably priced systems.		
Instrumentation (includes reliable leak detection and City of Wilmington SCADA-compatible process monitoring telemetry and its calibration)		

4.6 Incentive for Savings

As one of the basis during the term of this agreement, the OCCP CONTRACTOR, with the assistance of the CITY, shall evaluate cost effective and innovative ways to improve efficiency, reduce product consumption and lower costs.

During the term of this contract the OCCP CONTRACTOR may propose activities which may be taken to change the type of chemical product and/or reduce the chemical product usage while continuing to satisfy in every way the performance conditions of this contract. If agreeable to the CITY, the proposal may be implemented, based upon a method agreed to in advance to measure the costs to the CITY of such proposal and to measure the savings in chemical costs during the remainder of the contract period. Measured/documented savings shall be shared equally between the CITY and the OCCP

CONTRACTOR. As applicable, due to joint-use facilities, the CITY's share shall be further shared between the DISTRICT and/or the TOWN in accordance with previously adopted cost-sharing provisions.

Notwithstanding this provision, nothing shall preclude and CITY reserves the right to independently conduct evaluations of alternative odor and corrosion control approaches including field trials/ demonstrations, at its discretion throughout the contract period. The CITY may elect to accept assistance in conducting these evaluations. As applicable and necessary, particularly when existing facilities are involved, the OCCP CONTRACTOR shall offer its cooperation and if requested, its participation in the prosecution of these evaluations.

4.7 Program Assurances

4.7.1 Performance

Significant unexplained and undocumented differences from projections influencing/predicating the award and ongoing administration of the OCCP contract may form the basis for price adjustment or dismissal of the OCCP CONTRACTOR.

For any continuous six-hour period in which the CITY's specified performance criteria are not met (exceptions for equipment failure retained), OCCP CONTRACTOR will forego its prorated fees for services and equipment (for all its stations) until such time compliance has been restored. This assurance in no way is meant to negate whatever right the CITY may have should extended non-compliance occur.

4.7.2 Cost-Performance

Should either the CITY or OCCP CONTRACTOR identify a more cost- effective treatment procedure once the program is underway (for any of the specified application points), OCCP CONTRACTOR will make the necessary equipment and site changes (excluding product supply) at its cost, and provide the CITY with sufficient documentation to support its "at-cost" fee. This assurance in no way is meant to negate whatever benefits owed OCCP CONTRACTOR should the cost-savings measure be of its design (as detailed in Section 4.5 of the Request for Proposals).

4.8 Purchase Option on Installed Equipment

Any equipment not owned by the CITY that may be installed by the OCCP CONTRACTOR at any and/or all application sites, may be purchased by the CITY, at the option of the CITY, during the term of this Agreement period, at the lump sum prices provided in Section 4.4. If the CITY accepts a purchase option, the equipment purchased will be left in place by the OCCP CONTRACTOR at the expiration date of this Agreement and the purchase price will be due upon the CITY's receipt of an invoice. However, demobilization charges stated in paragraph **4.1** for the specific equipment purchase shall be waived and shall not be payable.

Basic installation only (no H2S-telemetry or back-up feeders).

The CITY may elect to purchase equipment provided by the OCCP CONTRACTOR at any time, calculated to be the difference between the equipment purchase price and the total amount of months depreciation accumulated on that particular unit. Such purchase costs shall be depreciated to zero salvage value over a three year life cycle.

4.9 Progess Payment Invoicing

The OCCP CONTRACTOR shall submit requests for payment for all applicable fees to which it is entitled on a calendar month basis within the following calendar month. Requests for payment shall be itemized and supported by suitable documentation. Requests for payment shall be submitted directly to the CITY, TOWN, or DISTRICT where only their individual facilities are involved. Requests for payment for joint-use facilities shall be submitted to the CITY for further cost apportionment among the participating jurisdictions in accordance with previously adopted cost-sharing provisions.

All progress payment requests will be accompanied by a summary denoting the currently invoice amount and cumulative expenditures under the Agreement before (exclusive) and after (inclusive of the currently invoiced amount. As applicable, all figures shall be further segregated to reflect CITY, DISTRICT, TOWN or joint-use facilities involved.

4.10 Contract Ceiling

The total sum of fees for all services under this Agreement during the term of thirty-six (36) months shall not exceed an annualized calendar year amount of **$712,531.67** and a total contact value of **$2,137,595.00** without prior written approval of the CITY.

5. Release and Indemnity

5.1 To the fullest extent permitted by law, the OCCP CONTRACTOR shall release, indemnify, keep and save harmless the CITY, its agents, officials and employees, from any and all responsibility or liability for any and all damage or injury of any kind or nature whatever (including death resulting therefrom) to all persons, whether agents, officials or employees of the CITY or third persons, and to all property proximately caused by the negligent acts or failure to act by OCCP CONTRACTOR (or by any person acting for the OCCP CONTRACTOR or for whom the OCCP CONTRACTOR is responsible). The OCCP CONTRACTOR expressly understands and agrees that any performance bond or insurance protection required by this Agreement, or otherwise provided by the OCCP CONTRACTOR, shall in no way limit the OCCP CONTRACTOR'S responsibility to release, indemnify, keep and save harmless and defend the CITY as herein provided. The intention of the parties is to apply and construe broadly in favor of the CITY the foregoing provisions subject to the limitations, if any, set forth in N.C.G.S. 22B-1.

5.2 All activity engaged by the OCCP CONTRACTOR required by this agreement shall be through the authority and/or responsibility of the OCCP CONTRACTOR or its agent(s). Without limiting the generality of sub-paragraph 5.1, the OCCP CONTRACTOR shall hold the CITY harmless for any work performed by the OCCP CONTRACTOR's personnel, agents or equipment that causes incidents including, but not limited to, chemical spills from overfilling, unloading, or equipment failure.

6. **Personnel**

It is mutually agreed that OCCP CONTRACTOR is an independent contractor and not an agent of the CITY, and as such the OCCP CONTRACTOR shall not be entitled to any CITY employment benefits, such as but not limited to, vacation, sick leave, insurance, workmen's compensation, or pension and retirement benefits.

7. **Conflict of Interest**

No paid employee of the CITY shall have a personal or financial interest, direct or indirect, as a contracting party or otherwise, in the performance of this Agreement.

8. **Non-Waiver of Rights**

It is agreed that the CITY's failure to insist upon the strict performance of any provision of this Agreement, or to exercise any right based upon a breach thereof, or the acceptance of any performance during such breach, shall not constitute a waiver of any rights under this Agreement.

9. **Suspension or Termination of Agreement**

9.1 In the event that review of the OCCP CONTRACTOR'S performance shows nonconformance to the work required by this contract, the Scope of Services or other terms of conditions contained herein as a result of the OCCP CONTRACTOR'S errors, omission or negligent acts, the OCCP CONTRACTOR shall be in breach of this Agreement and the CITY may take corrective action as it deems necessary including, but not limited to termination, or withholding or reduction of payment.

9.2 The CITY shall also have the right to suspend this Agreement for conditions stated in Paragraph 9.1 upon written notice to the OCCP CONTRACTOR. Such written notice shall state the reasons for suspension and allow for a review period of ten (10) days during which the OCCP CONTRACTOR shall be provided with an opportunity to respond with an explanation or justification, and/or shall undertake any reasonable remedial action required by the CITY. If, in the opinion of the CITY, the OCCP CONTRACTOR remains in violation of this Agreement at the completion of the ten (10) day suspension period, the CITY shall have the right to terminate this Agreement whereupon all obligations of the CITY to the OCCP CONTRACTOR shall cease.

9.3 In the event this project is terminated prior to completion of the services by the OCCP CONTRACTOR, the OCCP CONTRACTOR shall by paid for services performed to the date of termination. (In no event will the amount due OCCP CONTRACTOR in the event of termination exceed that amount set forth in Paragraph 4 of this Agreement for the work performed or chemicals supplied. OCCP CONTRACTOR shall be paid for all reimbursable, as defined herein, which are due him).

9.4 This Agreement may be terminated without cause by either party upon one-hundred eighty (180) days written notice.

9.5 The CITY shall have the exclusive right to suspend chemical treatment from any

application site during the term of this Agreement for any reason whatsoever, and to establish a date for restarting such chemical treatment. The length of any such suspension shall be as determined necessary by the CITY. Provided that the equipment remains stored at the application site and technical services continue along with control segments during the suspension, the CITY shall be obligated to continue to pay the OCCP CONTRACTOR for equipment rental, and/or technical services, respectively, however, the OCCP CONTRACTOR shall have no rights to recover from the CITY any fees or profits associated with chemical product deliveries or use which may have been anticipated but is not furnished during a suspension. If equipment is demobilized or remobilized to an application site as a result of a suspension, the CITY shall pay the OCCP CONTRACTOR the appropriate charges for such services as defined in the fee schedule.

9.6 Nothing contained herein shall prevent the CITY from pursuing any other remedy which it may have against OCCP CONTRACTOR including claims for damages.

9.7 In the event this agreement is terminated by the CITY with cause, or is terminated by the OCCP CONTRACTOR without cause, the fees stated in this agreement for demobilization of equipment shall be waived, and demobilization shall occur at the expense of the OCCP CONTRACTOR.

10. Assignment of Agreement

It is mutually agreed by the parties hereto that this Agreement is not transferable by either party without the written consent of the other party to this Agreement. No subcontracts shall be utilized by the OCCP CONTRACTOR for performing the services under this agreement without the written approval of the CITY.

11. Insurance Requirements

The amount of insurance to be provided for all coverages listed under this section shall be not less than $1,000,000.00, unless otherwise specified, per occurrence for claims arising from bodily injury and/or property damage, including accidental death which may arise directly or indirectly from OCCP CONTRACTOR'S performance of work under this contract. The OCCP CONTRACTOR shall be responsible for any liability directly or indirectly arising out of work performed under this contract by a subcontractor which is not covered by the subcontractor's insurance.

11.1 The OCCP CONTRACTOR shall maintain during the life of this Agreement the statutory WORKERS' COMPENSATION INSURANCE. In addition, EMPLOYER'S LIABILITY INSURANCE in an amount not less than $500,000.00 for each occurrence for all of his employees to be engaged in providing services under this Agreement and, in case any such services are sublet, the OCCP CONTRACTOR shall require the subcontractor similarly to provide workers' compensation insurance and employer's liability insurance for all of the subcontractor's employees to be engaged in such services. Where services under this Agreement includes any water or navigational exposure, coverage shall be included to cover the Federal Longshoremen's and Harborworker's Act and the Federal Jones Act.

11.2 The OCCP CONTRACTOR shall take out and maintain during the life of this contract COMPREHENSIVE GENERAL LIABILITY INSURANCE, including INDEPENDENT CONTRACTORS LIABILITY coverage and CONTRACTUAL

LIABILITY insurance covering the OCCP CONTRACTOR'S liability assumed under the paragraph "Release and Indemnity ." The OCCP CONTRACTOR shall take out and maintain during the life of this contract BROAD FORM PROPERTY DAMAGE insurance.

11.3 The OCCP CONTRACTOR shall take out and maintain during the life of this Agreement AUTOMOBILE LIABILITY INSURANCE. Such coverage shall be written on a comprehensive form covering owned, unowned and leased vehicles.

11.4 The OCCP CONTRACTOR shall furnish the schedule of insurance carried under this Agreement, in the form of a document attested by the insurance carrier or his agent, stating and itemizing the several coverages as provided above. The insurance carrier or its agent shall also certify on these documents that it will notify the CITY by registered mail at least twenty (20) days prior to any cancellation or nonrenewal of these coverages.

12. Findings Confidential

All of the information, reports, cost estimates, plans, specifications and documents prepared or assembled by the OCCP CONTRACTOR under this Agreement are the property of the CITY. The OCCP CONTRACTOR agrees that any such documents shall not be made available to any individual or organization other than appropriate CITY officials or as required by law without prior written approval of the CITY. Nothing contained in this paragraph shall be construed to prevent the OCCP CONTRACTOR from making information, reports and documents available to those individuals or firms directly concerned with the project involved with prior written agreement of the CITY.

13. Entire Agreement

This Agreement constitutes the entire understanding of the parties.

14. Subcontracts

The OCCP CONTRACTOR shall utilize no subcontracts for carrying out the services to be performed under this agreement without the written approval of the CITY.

15. Binding Effect

This Agreement shall be binding upon the successors, assigns, agents, officials, employees, independent contractors, and subcontractors of the parties.

16. Continuing Obligation

The parties will make and execute all further instruments and documents required to carry out the purposes and intent of this Agreement.

17. Reference

Use of the masculine includes feminine and neuter, singular includes plural; and captions and headings are inserted for convenience of reference and do not define, describe, extend or limit the scope of intent of the Agreement.

18. Interpretation

All of the terms and conditions contained herein shall be interpreted in accordance with the laws of the State of North Carolina. In the event of a conflict between the various terms and other applicable provisions, then the more particular shall prevail over the general and the more stringent or higher standard shall prevail over the less stringent or lower standard.

19. Saving Clause

If any section, subsection, paragraph, sentence, clause, phrase or portion of this Agreement is for any reason held invalid, unlawful, or unconstitutional by any court of competent jurisdiction, such portion shall be deemed severable and such holding shall not affect the validity of the remaining portions hereof.

20. Other Laws and Regulations

OCCP CONTRACTOR will comply with any and all applicable federal, state and local standards, regulations, laws, statutes and ordinances regarding toxic, hazardous and solid wastes and any other pollutants; public and private nuisances; health or safety; and zoning, subdivision or other land use controls. OCCP CONTRACTOR will take all reasonably necessary, proper or required safety, preventative and remedial measures in accordance with any and all relations and directives from the North Carolina Department of Health, Environment and Natural Resources, the United States Environmental Protection Agency, the North Carolina Division of Environmental Management, Health Departments, and any other federal, state or local agency having jurisdiction, to insure the prompt prevention or cessation (now or in the future) of violations of either the applicable provisions of such standards, regulations, laws, statutes, and ordinances or any permits or conditions issued thereunder.

OCCP CONTRACTOR shall provide five (5) copies of a "Operations Manual", acceptable to the CITY, that would include, but not be limited to, the technical services procedure, equipment schematics, and stating or demonstrating the methodology for compliance with the laws and regulations of the above stated agencies. If such a manual is not available at the time of contract execution, the OCCP CONTRACTOR shall provide such information within ninety (90) days after execution.

21. Amendments

This Agreement shall not be modified or otherwise amended except in writing signed by the parties.

22. NonDiscrimination

The OCCP CONTRACTOR will take affirmative action not to discriminate against any employee or applicant for employment or otherwise illegally deny any person participation in or the benefits of the program which is the subject of this Agreement because of race, creed, color, sex, age, disability or national origin. To the extent applicable, OCCP CONTRACTOR will comply with all provisions of Executive Order No. 1 1246 the Civil Rights Act of 1964, (P.L. 88-352) and 1968 (P.L. 90-284), and all applicable federal, state and local laws, ordinances, rules, regulations, orders instructions, designations and other directives promulgated to prohibit discrimination. Violation of this provision, after notice, shall be a material breach of this Agreement and may result, at CITY's option, in a termination or

suspension of this Agreement in whole or in part.

IN WITNESS THEREOF, the CITY has caused this Agreement to be duly executed in its name and behalf and the OCCP CONTRACTOR has caused this Agreement to be duly executed in its name and behalf and it corporate seal to be hereunto affixed, and attested to.

CITY OF WILMINGTON, NORTH CAROLINA

BY: _____
Sterling B. Cheatham, City Manager

WITNESS:

_____
Steven D. Bridges, Purchasing Manager

APPROVED AS TO FORM:

_____
Thomas C. Pollard, City Attorney

CITY ACCOUNTANT'S CERTIFICATION

This instrument has been preaudited in the manner required by the Local Government Budget and Fiscal Control Act this the 23rd day of March 2004.

_____
W. Brent McAbee, Finance Officer

ALTIVIA CORPORATION

BY: R. M. Morsen
President, Vice President, Assistant Vice President

ATTEST:

Fred A. Stahelin
Secretary, Assistant Secretary, Trust Officer

(CORPORATE SEAL)

STATE OF TEXAS

COUNTY OF Harris

I, Susan A Kalich, a Notary Public, certify that

Fred A. Stahelin personally came before me this day
(Secretary, Assist. Sec., Trust Officer)

and acknowledged that he (she) is Secretary
(Secretary, Assist. Sec., Trust Officer)

of ALTIVIA a corporation, and that by
(Name of Corporation)

authority duly given and as the act of the corporation, the foregoing instruction was signed in its

name by its Vice President
(President, Vice President, Assist. Vice President)

sealed with its corporate seal, and attested by himself (herself) as its

Secretary.
(Secretary, Assist. Secretary, Trust Officer)

WITNESS my hand and official seal this the 19TH day of Nov 2004.

Notary Public

My commission expires: 7/23/06

SUSAN A. KALICH
MY COMMISSION EXPIRES
JULY 23, 2006
(SEAL)

(FOR BIDDING)

CORPORATE RESOLUTION

BE IT RESOLVED by the Board of Director of ALTIVIA, in a meeting duly assembled, that Robert Monsen, Vice President of Sales and Marketing, of the Corporation, be, and he is hereby authorized, empowered and directed for an on behalf of the Corporation to negotiate for and sign any and all quotation proposals and/or contracts which this Corporation might enter into for the furnishing of services for the Corporation under such terms, conditions and stipulates, and for such consideration as he might deem the best interest of the Corporation.

****

I, Fred Stahelin, Secretary of ALTIVIA, do hereby certify that the above and foregoing is true and correct copy of a Resolution unanimously adopted at a meeting of the Board of Directors of said Corporation held on the 15th day of August, 2003, at which meeting all members of the Board of Directors were present and voted thereon and that said Resolution has been spread upon the minute books of the Corporation, and same is now in full force and effect.

WITNESS MY SIGNATURE this 18th day of August, 2003, at Houston, TX.

Fred A. Stahelin
Secretary

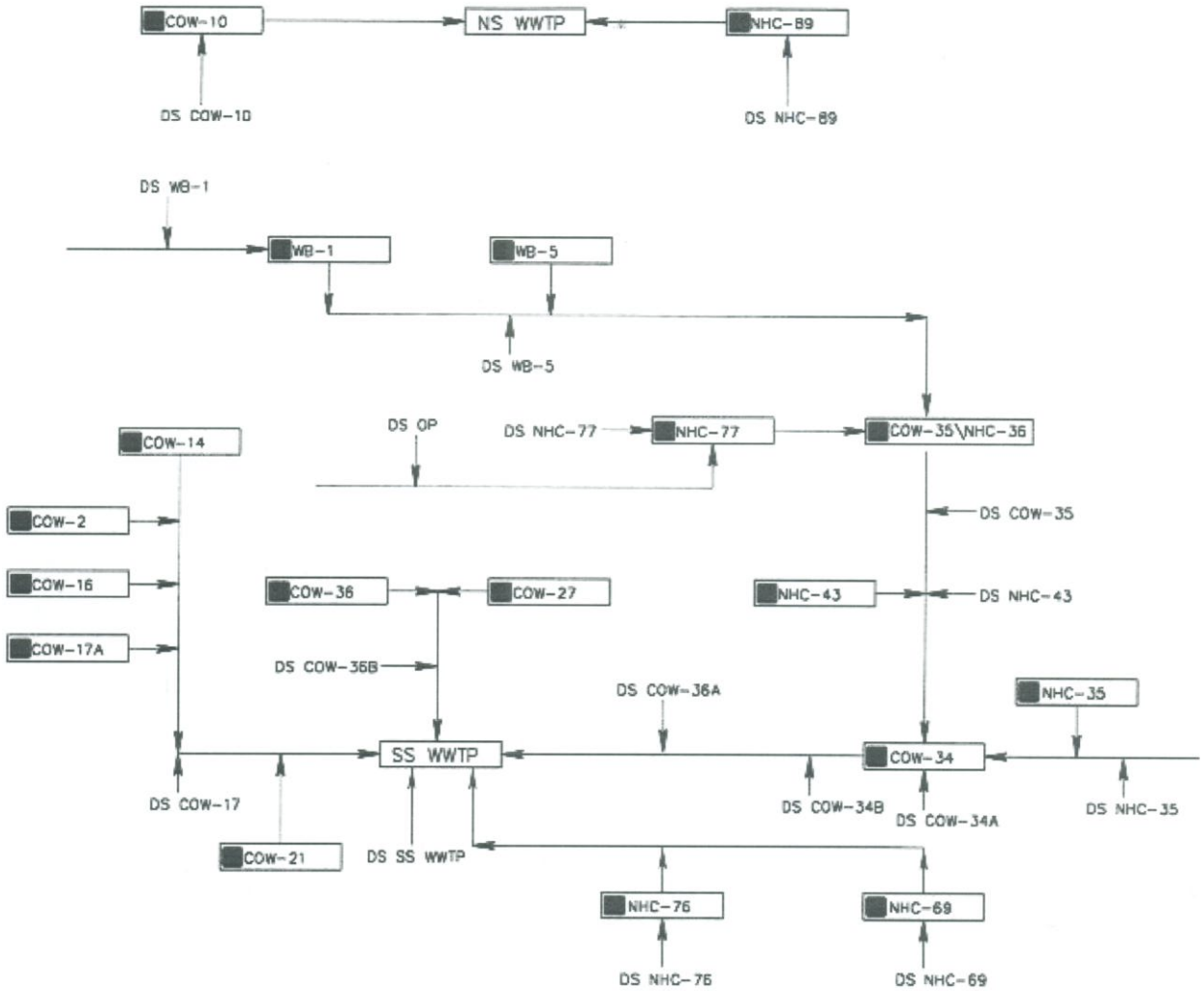

McKIM&CREED
243 NORTH FRONT STREET
WILMINGTON, NC 28401
PHONE: 910-343-1048
FAX: 910-251-8282
Internet Site: http://www.mckimcreed.com

APPENDIX-A
Odor/Corrosion Control Program
Schematic of Dosing Locations
and
Systems Under Control

CITY OF WILMINGTON / NEW HANOVER COUNTY
SANITARY SEWER MASTER PLAN

ROUTING SCHEMATIC

DATE:
MCE PROJ. #
DRAWN
DESIGNED
CHECKED
PROJ. MGR.

SCALE
HORIZONTAL: NA
VERTICAL: NA

MCE DWG NUMBER
SHEET NUMBER
OF

STATUS:
REVISION

S:\0824\0057\80-dwg\012401 Routing Schematic.dwg, 07/10/2002 09:40:10 AM, pstrickland

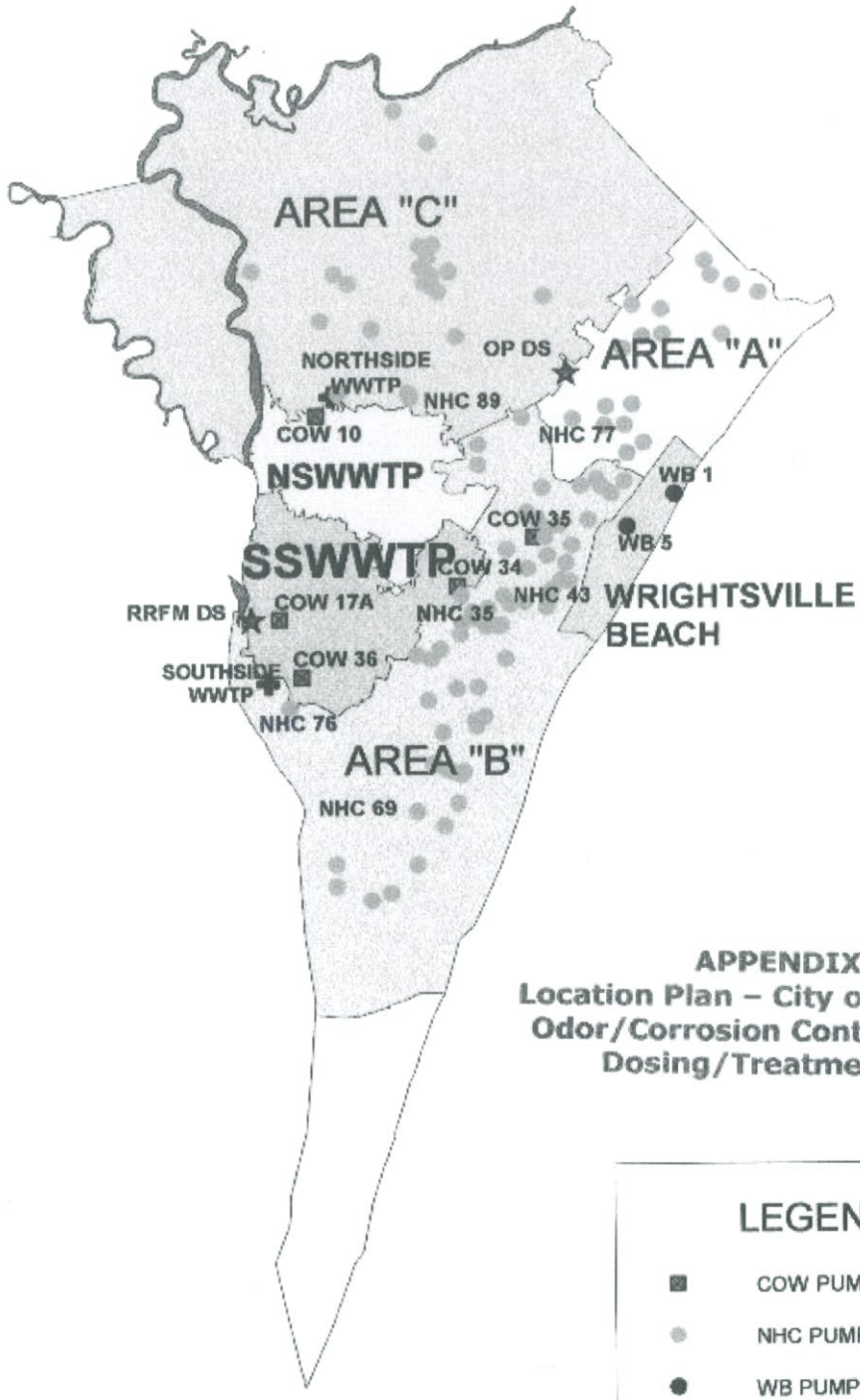

APPENDIX B
Location Plan – City of Wilmington
Odor/Corrosion Control Program
Dosing/Treatment Sites

LEGEND

- COW PUMP STATIONS
- NHC PUMP STATIONS
- WB PUMP STATIONS
- OCCP DOSING STATION
- WWTP

ODOR CORROSION SYSTEM
PUMP STATION LOCATIONS

N
W E
S

APPENDIX B

THIOGUARD TST Field Trial Report for The City of Wilmington, New Hanover County, and The Town of Wrightsville Beach, NC

PREMIER CHEMICALS

BRENNTAG
Stinnes Logistics

THIOGUARD® TST Field Trial Report

For

The City of Wilmington, New Hanover County
and
The Town of Wrightsville Beach, NC

City of Wilmington
Public Utilities Department
PO Box 1810
Wilmington, NC 28402
910-341-7890
910-341-4659 fax

Prepared by:

Mr. Chris Armstrong
Premier Chemicals, LLC
211 Craig Dr.
Blacksburg, VA 24060
540-961-3979

and

Mr. Scott Fisher
Brenntag Southeast, Inc.
265 Morganwood Dr.
Elizabethtown, NC 28337
910-645-6569

PREMIER CHEMICALS

BRENNTAG
Stinnes Logistics

November 4, 2003

Mr. Ken Vogt, Jr.
City of Wilmington
Public Utilities Dept.
P.O. Box 1810
Wilmington, NC 28402-1810

Subject: THIOGUARD® TST Post Field Trial Report

Dear Mr. Vogt,

The following is the post field trial report on the findings from the THIOGUARD® odor and corrosion control testing. As you know, the THIOGUARD® was used to control the hydrogen sulfide gas in the Northeast Interceptor force main in three phases. The goal for the first phase beginning July 1, 2003 was to treat the flow coming in to PS-35 controlling the hydrogen sulfide levels at PS-35 and upstream.
The second phase took place in August 2003 and was to optimize the treatment upstream of PS-35 and determine how far the residual pH traveled downstream to PS –34. The third and final phase took place in September 2003 and the goal was to bring the entire NEI under control all the way through to the South Side Wastewater Treatment Plant. A brief overview of the project leading up to and through the conclusion of the test follows.

Invitation by the City of Wilmington

The City of Wilmington Public Utilities Department invited Brenntag Southeast, an authorized Premier Chemicals THIOGUARD® distributor, to discuss the use of Premier Chemicals' THIOGUARD® TST odor and corrosion control products and its application in both the Wilmington area collection system and the two City owned wastewater treatment plants. A meeting was held to discuss the current treatment the City was using and a possible application of THIOGUARD® to control the hydrogen sulfide headspace gas, corrosion and total system treatment. At the meeting we discovered the following:

- The current treatment includes the addition of hydrogen peroxide, 50% solution, at multiple dosing sites throughout the collections system. The application technology is oxidation. Vapor stage treatment, via Calgon Granulated Activated Carbon Scrubbers, is used in certain hot spot areas to further control hydrogen sulfide emissions.

- The goal was to treat the NEI with Premier Chemicals' THIOGUARD® using base addition technology and compare the performance with the current hydrogen peroxide liquid treatment. This would also attempt to reduce the number of application sites and replace it with an environmentally safe and non-hazardous product. This would highlight the potential benefits of Total System Treatment with FOG (Fats, Oils and Grease) control, increased solids settling/clarification and alkalinity supplementation at the downstream wastewater plant.

• The plan was to treat the NEI in three phases, while maintaining control of the hydrogen sulfide odor and corrosion, in a step approach. The odor and corrosion levels were to be monitored by Odalog hydrogen sulfide gas detection instruments and pH monitoring.

• Phase One was to control the collection system above Pump Station 35 and maintain odor and corrosion control at PS-35. The plan was to treat the flow from Wrightsville Beach and the Ogden area north of PS-35.

• Phase Two was to optimize the system above PS-35 and carry the pH of 8.2 through the system to PS-34, reducing remaining hydrogen peroxide dosing sites above PS-34.

• Phase Three was to add a THIOGUARD® feed system at PS-34 and control the entire NEI all the way through to the Southside Wastewater Treatment Plant. The objective was to maintain a pH of 8.2 throughout the NEI, controlling odor and corrosion was base addition treatment.

After careful study of the NEI maps and a tour of a number of the pump stations, we decided that Wrightsville Beach PS-1 and New Hanover County Lift Station #79 on Bayshore Drive were the best sites to initiate the trial and control the system north of COW PS-35. A proposal and timeline was submitted to Mr. Ken Vogt and the Odor Control Team for consideration and review. The Odor Control Team gave Brenntag Southeast and Premier Chemicals the go ahead to proceed with the pilot study.

Overview of Hydrogen Sulfide Odor and Corrosion Control with THIOGUARD® Base Addition

The following is a review of the mechanisms with which THIOGUARD® controls odor and corrosion:

According to the acid/base chemistry of sulfide species, pH control of the wastewater is a method that can be used to reduce the release of hydrogen sulfide. For example, raising the pH of the wastewater will shift the sulfide species from H_2S to HS^-, thereby decreasing the concentration of aqueous phase H_2S.

According to Henry's Law, reducing dissolved or aqueous H_2S results in a decrease in the equilibrium concentration of H_2S in the atmosphere ($H_2S_{(g)}$). The results of equilibrium calculations based on acid dissociation constants and Henry's Law for sulfide species are shown below. As can be seen, the $H_2S_{(g)}$ concentration in the headspace is a function of pH. Hydrogen sulfide in the headspace is greatest below a pH of approximately 5.0. As pH is increased, $H_2S_{(g)}$ in the headspace decreases rapidly. From this analysis, it is clear an increase in wastewater pH will reduce the amount of $H_2S_{(g)}$ released to the headspace of the collection system. This directly decreases hydrogen sulfide odor and related corrosion.

Since wastewater pH is typically near 7.0, any increase in pH reduces $H_2S_{(g)}$ concentrations. Henry's Law predicts raising pH to approximately 9.0 virtually eliminates all headspace hydrogen sulfide. (Note: field data from lines THIOGUARD® reveals headspace hydrogen sulfide reduction in excess of that predicted by Henry's Law. This is caused by non-solution phase, surface reactions with unsolublized magnesia particles.)

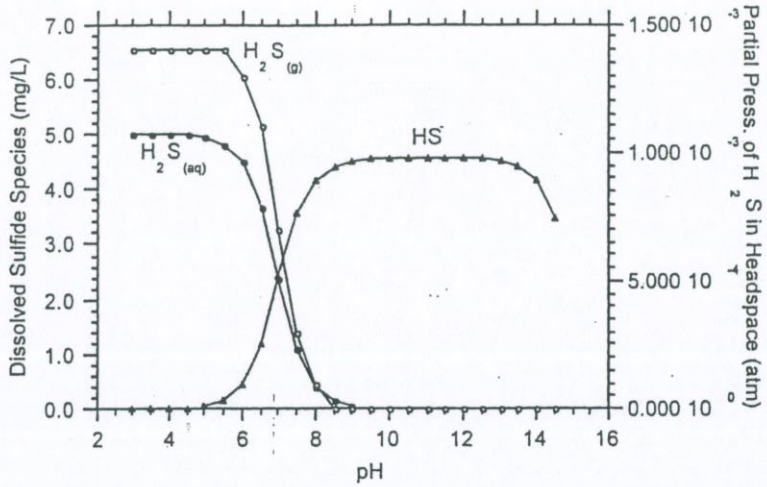

Sulfide speciation diagram for closed system at equilibrium with 5 mg/L total sulfide dissolved in water at equilibrium at 25 °C.

Although Thioguard® relies in part on Henry's Law to reduce headspace hydrogen sulfide; there are three principal mechanisms that contribute to the reduction of headspace hydrogen sulfide with the use of Thioguard®. First, as outline previously, Thioguard is an alkaline material. When added to wastewater it raises pH via the slow controlled release of hydroxyl (OH^-) ions:

$$Mg(OH)_2 \Leftrightarrow Mg^{2+} + 2OH^-$$

Raising pH decreases hydrogen sulfide emission from wastewater. A recent demonstration at the City of Los Angeles yielded the following relationship:

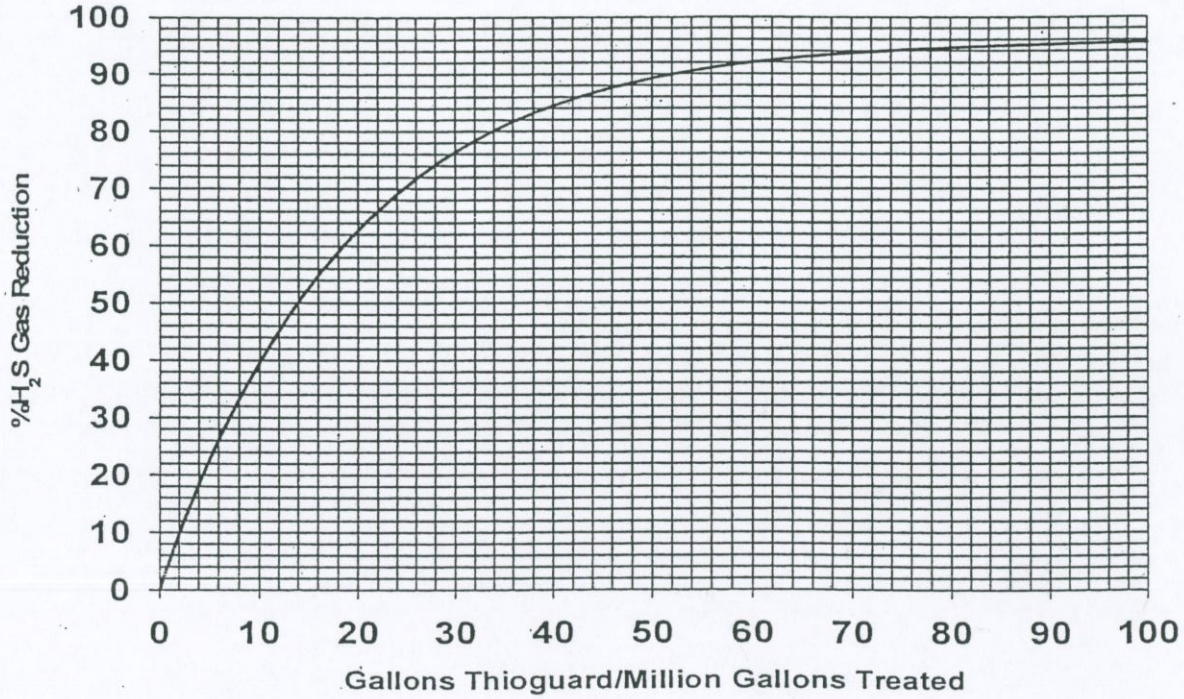

Raising the pH to about 8.2, which on average takes about 75-100 gallons of Thioguard® for each million gallons treated, is sufficient to achieve a greater than 95% reduction in hydrogen sulfide gas emission in high sulfide systems. By raising wastewater pH speciation of dissolved sulfides is also altered:

$$H_2S_{(gas)} \Leftrightarrow H_2S_{(aq)} \Leftrightarrow H^+_{(aq)} + HS^-_{(aq)} \Leftrightarrow H^+_{(aq)} + S^{2-}_{(aq)}$$

$$\text{Lower pH} \Leftrightarrow \text{Higher pH}$$

At a pH of 7.0, approximately 50% of the sulfides are present as dissolved hydrogen sulfide gas and the other 50% present as hydrosulfide, HS^- (or bisulfide) ion.

As wastewater pH rises slightly, equilibrium shifts rapidly to the right. This dramatically increases the solubility of hydrogen sulfide and favors formation of bisulfide ion. Bisulfide ion, unlike hydrogen sulfide, cannot escape from solution to the atmosphere and cause odor and corrosion. Sulfide ion S^{2-} can be ignored in most wastewater systems, as its occurrence is not significant until about pH 12.0. This mechanism of sulfide control can be simulated with other bases such as lime or caustic soda. However these chemicals pose safety, controls and sludge issues that limit their use and make them impractical for system wide application.

A second mechanism, important to the performance of Thioguard®, is how hydrogen sulfide is bound in Thioguard treated wastewater when pH subsequently falls due to dilution. An examination of the equilibrium equation that describes the pH dependent speciation of sulfide in solution, equation (1), might suggest that downstream dilution will promote subsequent hydrogen sulfide release:

$$H_2S_{(g)} \Leftrightarrow H_2S_{(soln)} \Leftrightarrow H^+ + HS^- \Leftrightarrow H^+ + S^{2-} \qquad (1)$$

However, there are a number of other mechanisms at work that prevent the flare-off of hydrogen sulfide gas once treated with magnesium hydroxide. Since Thioguard® effectively converts dissolved hydrogen sulfide gas to bisulfide (HS^-) by raising sewage pH; sulfide is now present in a form that cannot escape into the gas phase, i.e. the headspace, and cause odors and corrosion.

Magnesium ion, generated from the dissociation of magnesium hydroxide (Thioguard®) in solution, is also known to associate or bind with dissolved sulfide. Mg^{2+}, like ferrous and ferric, is cationic and reacts directly with sulfides. This reaction is favored because magnesium hydroxide adsorbs sulfide directly from solution onto its surface. As hydroxide is liberated and magnesium ion becomes available, magnesium polysulfides form. Polysulfides are known to form under these conditions at the hydroxide particle interface. This results in the formation of species that do not readily dissociate to hydrogen sulfide in the absence of strongly acidic conditions.

Similar to, but lighter than more soluble iron sulfide, these complexes do not settle out in the collection system. Importantly, laboratory and field tests show these compounds are stable in municipal wastewater and do not breakdown to release hydrogen sulfide when downstream dilution subsequently decreases pH. This is an important mechanism for large collection systems.

Magnesium ion (Mg^{2+}), also catalyzes the oxidation of dissolved sulfides. The products of oxidation are believed to be sulfite (SO_3^{2-}) and sulfate (SO_4^{2-}). The rate of sulfide oxidation is increased on the order of 2-3 times in the presence of magnesium ion. This coupled with higher pH yields sulfide oxidation rates that are 5 to 6 times. Thioguard® therefore creates two conditions in the wastewater stream that result in dissolved sulfides undergoing an enhanced rate of oxidation under aerobic conditions. Sulfide arriving at the treatment plant is quickly oxidized in the aeration basin.

The third mechanism by which Thioguard® reduces hydrogen sulfide gas is its direct impact on the biofilm or slime layer. Raising the pH of wastewater above 7.5 retards sulfate reducing bacterial (SRB) activity in the slime layer. SRB present in the slime layer are responsible for generation of sulfides. Like any bacterial species, SRB have an optimal pH range in which they attain maximum activity. Thioguard® produces a pH environment that is non-optimal for SRB, thus decreasing their sulfide generating ability. Consequently, the continuous addition of Thioguard® to wastewater results in fewer sulfides actually being formed by SRB.

In long sewers with high retention times and converging flows, this is an important property. That is, upstream addition of Thioguard® to raise pH of converged flows produces pH of 9 in the upper reaches. This deactivates sulfate-reducing bacteria and little or no sulfide is generated. When used in this manner, Thioguard is capable of not only suppressing headspace hydrogen sulfide in sulfide laden lines; it can eliminate the initial reduction of sulfate to sulfide and lessen the amount of biologically produced sulfide.

Phase One Dosing Sites Setup, Data Collection and Conclusions

After careful review of the collection system and site assessments completed, it was agreed to treat the influent with a continuous addition of THIOGUARD® at two pump stations above PS-35.

PS #1 – Wrightsville Beach, Lumina Drive
PS #79 – NHC -Bayshore Drive

The feed rates were not clear at this point and the plan was to dose the system to achieve a pH of 8.2 at PS-35. The projections were to feed 75-100 gallons per one million gallons of flow.

The table below gives an average flow and proposed dosing rate for the feed site pump stations for Phase One:

Pump Station	Average Daily Flow	Estimated Daily Thioguard® Dosage
PS #79 Bayshore Drive	1,000,000 gallons	100 gallons
WB #1 Wrightsville Beach	633,000 gallons	63 gallons
Totals	**1,633,000 gallons**	**163 gallons**

The two THIOGUARD® feed units were sited and setup with the aid of City and County personnel. Once the equipment was ready, we initiated the dosing. It typically takes a few days to dial in feed rate to achieve the desired pH downstream. The goal was to achieve a 90 percent reduction in hydrogen sulfide headspace gas levels at PS-35 vault and in the collection system in route to PS-35.

Below is the data collected the first thirty-one days of Phase One testing:

Phase One Testing Data

Date	PS 79 Tank Level	WB #1 Tank Level	PS 35 Combine	WB Flow	Ogden Park	PS 35 Vault
7-3	56g	302g	8.9 pH	8.8 pH		
7-4	58g	192g	8.2 pH	8.6 pH		
7-5	180g	165g	8.3 pH	8.6 pH		
7-6	220g	220g	8.2 pH	8.8 pH		
7-7	358g	55g	8.2 pH	8.8 pH		
7-8	55g	247g			8.2 pH	
7-9	30g	190g	7.5 pH	8.8 pH	8.2 pH	
7-10	32g	194g	8.4 pH	8.8 pH		
7-11	36g	30g	7.56 pH	8.8 pH		

7-12	30g	30g	7.16 pH	8.26 pH	8.2 pH	
7-13	30g	30g	7.5 pH	8.4 pH	8.4 pH	
7-14	60g	30g			8.04 pH	
7-15	50g	30g	7.32 pH	8.01 pH	8.02 pH	
7-16	60g	30g	7.6 pH	8.8 pH	8.04 pH	
7-17	60g	30g	7.8 pH	8.5 pH	8.2 pH	
7-18	60g	30g	7.6 pH	8.2 pH	8.5 pH	
7-19	60g	30g			8.2 pH	
7-20	60g	30g				
7-21	60g	30g	7.5 pH	8.1 pH	8.5 pH	7.5 pH
7-22	60g	30g	8.7 pH	8.5 pH		7.5 pH
7-23	120g	30g	8.1 pH	8.2 pH	8.4 pH	
7-24	60g	30g		8.2 pH		
7-25	60g	30g				
7-26	60g	30g				
7-27	60g	30g				
7-28	60g	30g		8.1 pH	8.23 pH	7.4 pH
7-29	80g	30g		8.3 pH	8.1 pH	7.4 pH
7-30	60g	30g		8.38 pH	8.4 pH	7.5 pH
7-31	60g	30g		8.6 pH	8.2 pH	7.5 pH

Hydrogen sulfide gas levels were collected using App-tek Odalog hydrogen sulfide data logging instruments. The pH and dissolved sulfide levels were monitored by Brenntag Southeast and Premier Chemicals' personnel.

As you can see, it took ten days to get Wrightsville Beach dosing site tweaked out. We had pump failure and pacing problems with a DART Controller that was not expected during the first few days of start up. That equipment was repaired and WB#1 began to feed approximately 30 gallons per day on average of THIOGUARD®. Once NHC PS –79 Bayshore Dr. leveled out we were feeding approximately 60 gallons per day of THIOGUARD®. The collection lines from PS-79 to PS-35 and the Wrightsville beach line were in control once the correct feed rates were established. Despite this control in the lines treated, the pH in the vault at PS-35 was steady at 7.5 pH. The graphs below show that the headspace gas in the vault was much higher than inside the gate at PS-35. We then identified untreated flows coming into the vault that were suspected to be the problem. There was only one line that was being treated prior to the vault at PS-35. Once the vault flow and Wrightsville Beach combined inside the gate at PS –35 the hydrogen sulfide was reduced. We didn't think that we could effectively control the hydrogen sulfide gas by treating the one stream from Bayshore Drive. The dissolved sulfide levels were 3 ppm on the New Center Drive stream. That stream needed to be treated so that we didn't have to severely overfeed at WB #1 and PS #79 and still not properly lower the headspace gas in the vault.

Note that when PS-79 and WB#1 were in a severe overfeed situation, the pH in the combined flow looked very good and on target. We determined that one or both of the untreated flows coming into the vault should be considered for treatment of THIOGUARD®. We discussed this with Mr. Ken Vogt and Mr. Wyatt Blanchard and they agreed to allow us to treat the previously untreated New Center Drive area of the NEI to try to further control headspace gas in the vault at PS-35.

The first graph below shows the baseline hydrogen sulfide levels while in control with hydrogen peroxide and prior to treatment of THIOGUARD®. The THIOGUARD® was commissioned on July 1, 2003 and you

will see the spike in H_2S gas and the decrease in gas when the THIOGUARD® brings the system under control.

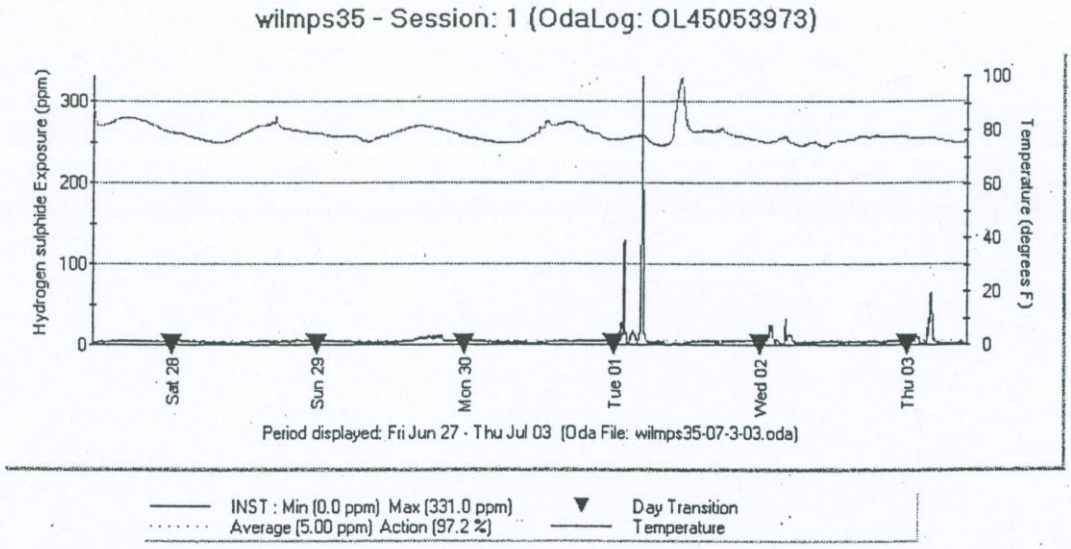

The graph below shows Odalog readings from the manhole in the gate at PS-35. The Wrightsville Beach flow and the PS-35 Vault flow are combined here. During the start up the Wrightsville Beach THIOGUARD® dosing station was in an overfeed situation. This overfeed helped compensate for the untreated flows from the NEI north of PS-35.

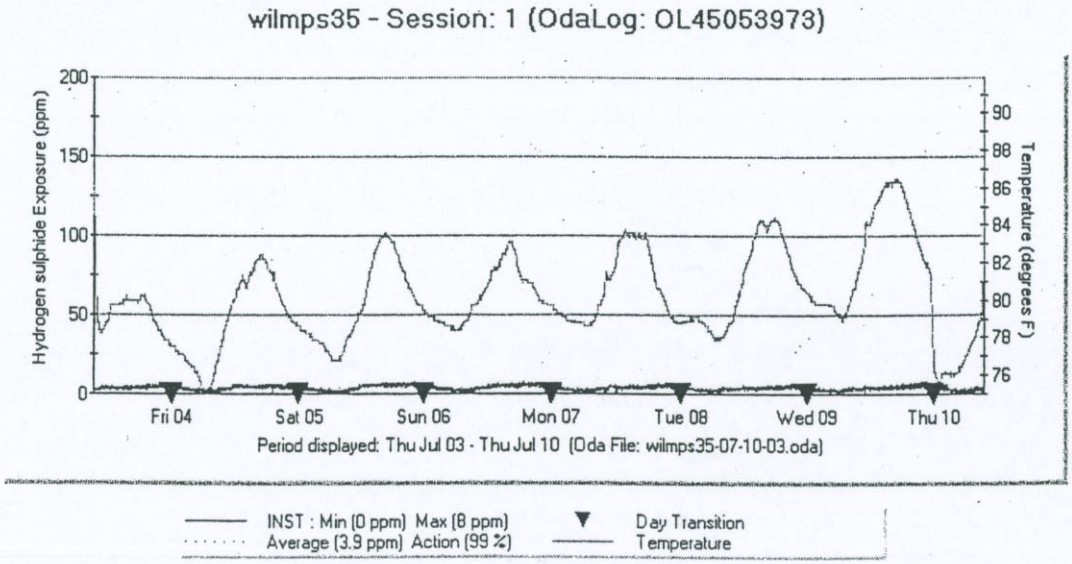

The graph below shows readings from PS-35 manhole. We noticed the increase in headspace gas over the weekend. At first glance, we thought it might be the weekend influx of vacationers as the weekend increase in H_2S gas became routine. We then turned our attention to the UNCW campus area. Our thought process was that perhaps the flow diminished over the weekend due to college students leaving town. This would cause a big reduction in flows and could be enough to create that rise in headspace gas as that is an untreated line coming from the college area.

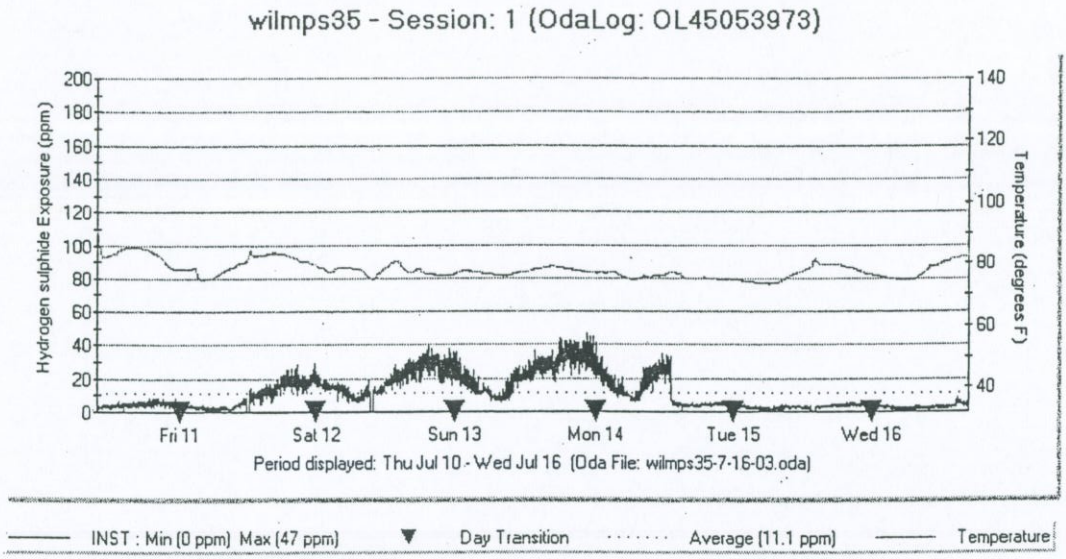

The graph below shows the system in control at PS-35.

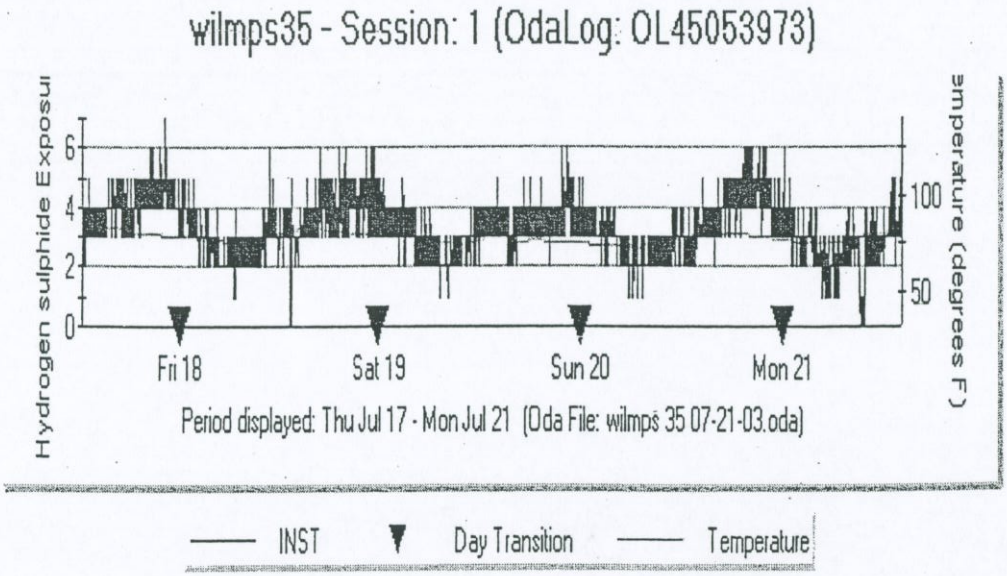

The graphs below show hydrogen sulfide gas levels in the vault at PS-35. Realizing that there was a portion of the NEI above PS-35 that was not being treated or under control we had discussions with Mr. Wyatt Blanchard and Mr. Ken Vogt, there were two streams coming in to the vault at PS-35 with rather large flows. The New Center Drive/UNCW flow of 1.5 MGD and the Wrightsville Sound/Land Fall flow of 0.43 MGD were definitely contributing to the hydrogen sulfide levels at the PS-35 vault. At this point in the trial

the Powdered Activated Carbon Scrubber was out of commission and the vault was most likely creating the H_2S odors at the street level.

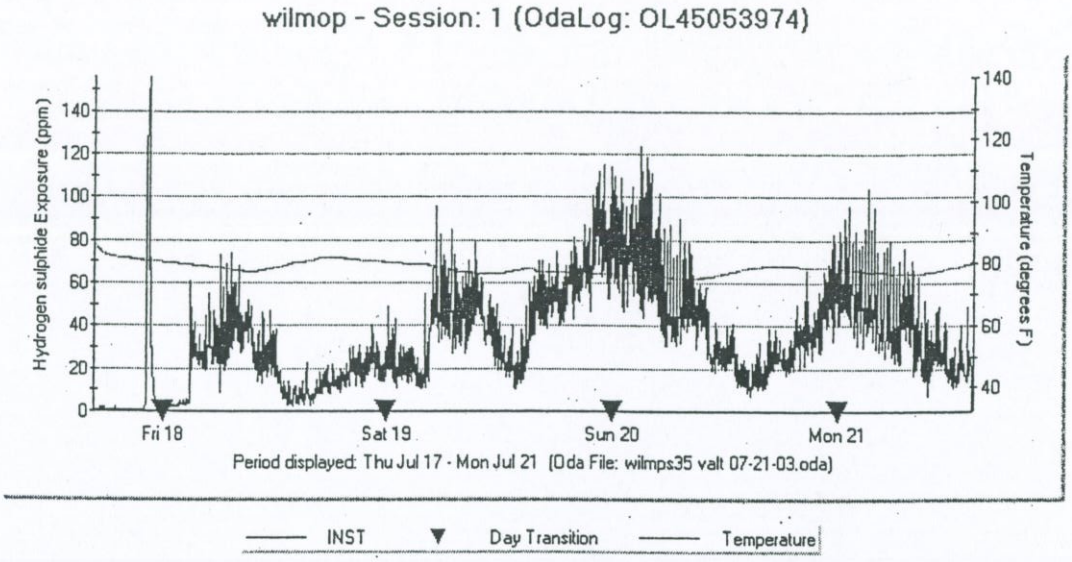

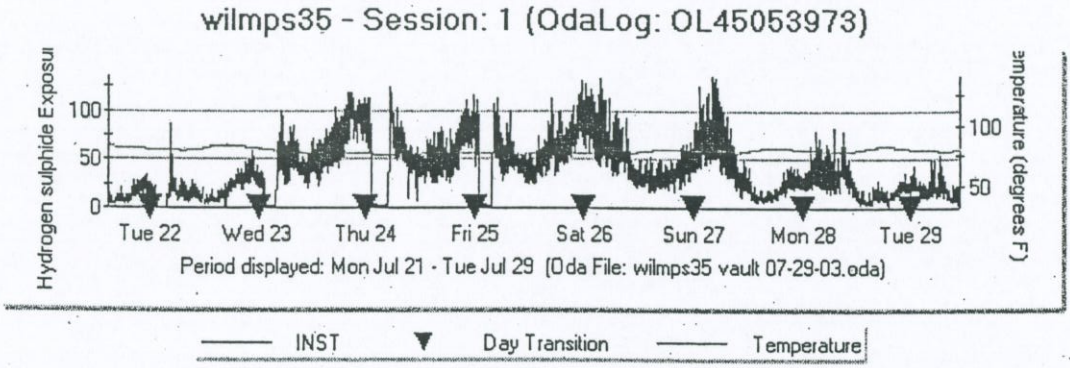

The data showed that the THIOGUARD® chemistry was effective in controling the gas levels downstream once the flows combined. The single application of THIOGUARD® at NHC PS-79 was not enough to bring the vault at PS-35 under control. A portion, if not all, of the other contributing flows coming in to that vault had to be reviewed and dissolved sulfide levels needed to be studied. The dissolved sulfide levels were tested at the manhole on Greenville Ave. just upstream from PS-35. The results from that test showed levels of 3 ppm dissolved sulfide. Under the right conditions, 1 ppm dissolved sulfide can generate over 500 ppm hydrogen sulfide gas. This will vary according to favorable conditions such as pH, temperature, flow, agitation and retention time. The flow from New Center Drive was definitely contributing to the gas levels at PS-35.

The information was compiled from Phase One of the Pilot Study and an email was sent to Ken Vogt outlining what we would like to do in Phase Two of the Pilot Study.

Phase Two of the Odor/Corrosion Pilot Study

1. Place a tank at NHC PS 53/ Nash Road to treat the New Center/UNCW flow of the NEI. The flow of approximately 1.5 MGD.
2. Decommission hydrogen peroxide at NHC DS-43 and possibly NHC-DS-35 and COW DS-34.
3. Monitor the system downstream to determine how far the pH carries through to COW PS-34.

The tank was placed at the NHC PS-53 Nash Rd. site with New Hanover County assistance. The THIOGUARD® was commissioned on August 1, 2003.

Phase Two Testing Data:

Date	PS# 79 Bayshore Dr.	WB#1	PS# 53 Nash RD.	PS 35 Comb.	WB Flow	PS 35 Vault	Ogden Park	Nash Road	PS 34
8-1	60g	27g	30g		8.4 pH	7.9 pH	7.7 pH	7.2 pH	
8-2		27g	30g	8.2 pH		8.34 pH	8.4 pH		
8-3	90g	15g	30g						
8-4	80g	30g	60g	8.6 pH	8.4 pH	8.3 pH			
8-5	96g	32g		8.3 pH	8.5 pH		8.27 pH	8.27 pH	
8-6	186g	27g	60g	8.36 pH	8.5 pH		8.16 pH	8.7 pH	
8-7	55g	27g		8.2 pH	8.5 pH	8.4 pH	7.9 pH	8.0 pH	7.8 pH
8-8	165g	27g		8.5 pH	8.6 pH		8.4 pH	8.47 pH	
8-9	41g	39g	30g	8.1 pH	8.6 pH		8.3 pH	8.3 pH	
8-10	41g	55g	160g	7.98 pH	8.8 pH		8.01 pH	7.7 pH	
8-11	58g	55g	90g	8.2 pH	9.0 pH				
8-12	137g	50g	120g	8.45 pH	8.48pH	8.2 pH	8.16 pH	8.42 pH	
8-13	110g	27g	30g	8.8 pH	8.5 pH	8.2 pH	8.19 pH	8.47 pH	
8-14	55g	27g	30g	8.1 pH	8.2 pH		7.9 pH	8.25 pH	
8-15	206g	27g		7.8 pH	7.75 pH		7.9 pH	7.28 pH	7.9 pH
8-16	36g	27g							
8-17	36g	27g							
8-18	36g	35g		7.9 pH	7.75 pH		7.7 pH	7.8 pH	
8-19	78g	60g	75g	8.11 pH	8.46 pH		7.9 pH	8.5 pH	
8-20	75g	27g		8.32 pH	8.37 pH	8.1 pH	8.13 pH	8.39 pH	
8-21	55g	27g							
8-22	75g	27g		8.27 pH	8.05 pH		8.29 pH	8.19 pH	7.9 pH
8-23	82g	27g	90g	8.59 pH	8.59 pH	8.2 pH	8.24 pH	8.24 pH	7.8 pH
8-24	90g	27g	90g						7.8 pH
8-25	90g	27g	90g	8.29 pH	8.25 pH		7.9 pH	8.29 pH	7.7 pH
8-26	90g	20g	120g	8.08 pH	8.23 pH			8.35 pH	
8-27	70g	15g	120g				8.22 pH		
8-28	55g	27g	70g					8.44 pH	
8-29	66g	27g	70g	8.39 pH					
8-30	55g	27g	70g		8.27 pH	8.4 pH	8.48 pH		8.0 pH
8-31	45g	27g							
Ave.	83 GPD	30 GPD	88 GPD						

The volumes of THIOGUARD® chemical addition above are a close approximate daily usage. You will notice that on a couple of occasions there were above average feed rates. On most of these occasions the lift station pump was stuck for whatever reason and our system continued to feed THIOGUARD®. In a permanent dosing site application, timers will be included in the electric circuits to the pumps to prevent an overfeed situation.

In contrast, there were times when the THIOGUARD® dosing sites were in an underfeed situation that were mainly due to our trial equipment problems. The trial equipment has pumps that are progressive cavity pumps with seals, stators and rotors that are high maintenance and have proved to be problematic in this application. In a permanent installation, the use of peristaltic pumps, that have no seals or stators, would be implemented to avoid the issues of seal and stator failure. We will offer specifications on the permanent THIOGUARD® feed equipment for your review prior to the bid process.

We noticed that there was a considerable amount of grease in the wet well at PS-53 Nash Rd. before we started to feed the THIOGUARD® and within one week the grease layer was completely gone. Grease saponification is yet another benefit that THIOGUARD® offers the collection system.

The graph below shows the effects of THIOGUARD once the Nash Rd. PS-53 comes on line. Please note the downward trend in headspace gas in the vault at PS-35. The average is gas levels are around 19 ppm and note the weekend surge upward again and then downturn on Monday.

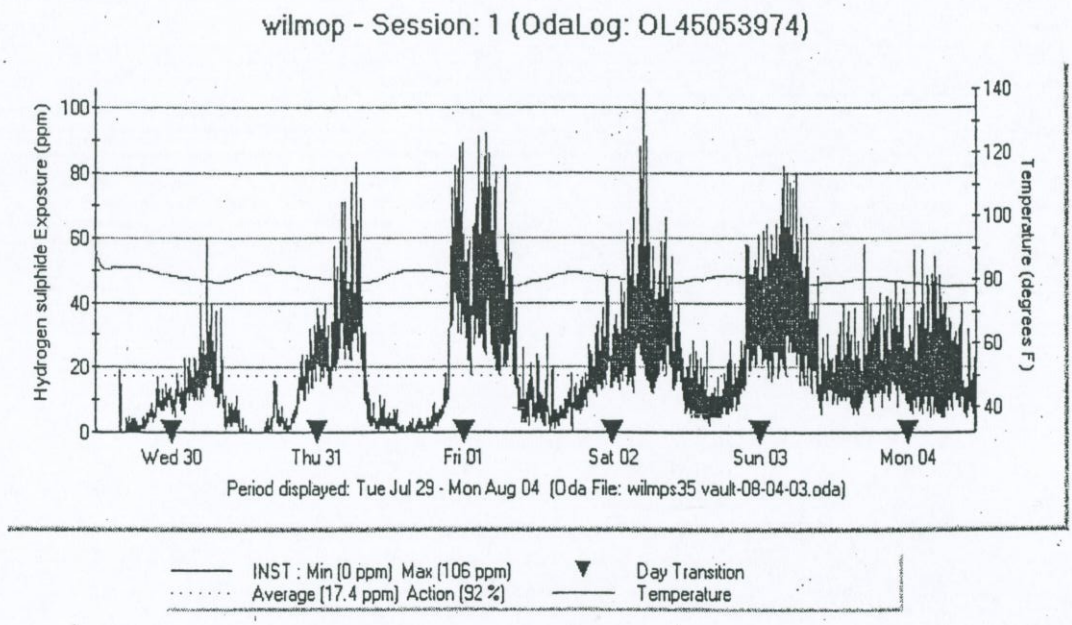

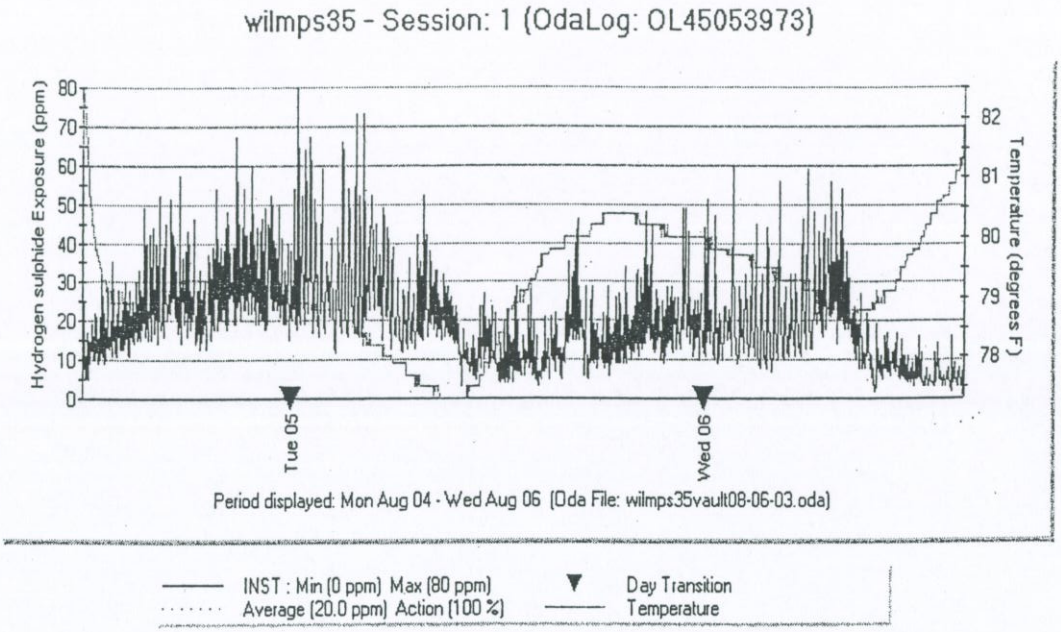

The graph below is data collected from the manhole inside the gate at PS-35. This is the combined flow from Wrightsville Beach, Ogden and New Center Drive. The average headspace H_2S gas is around 17 ppm.

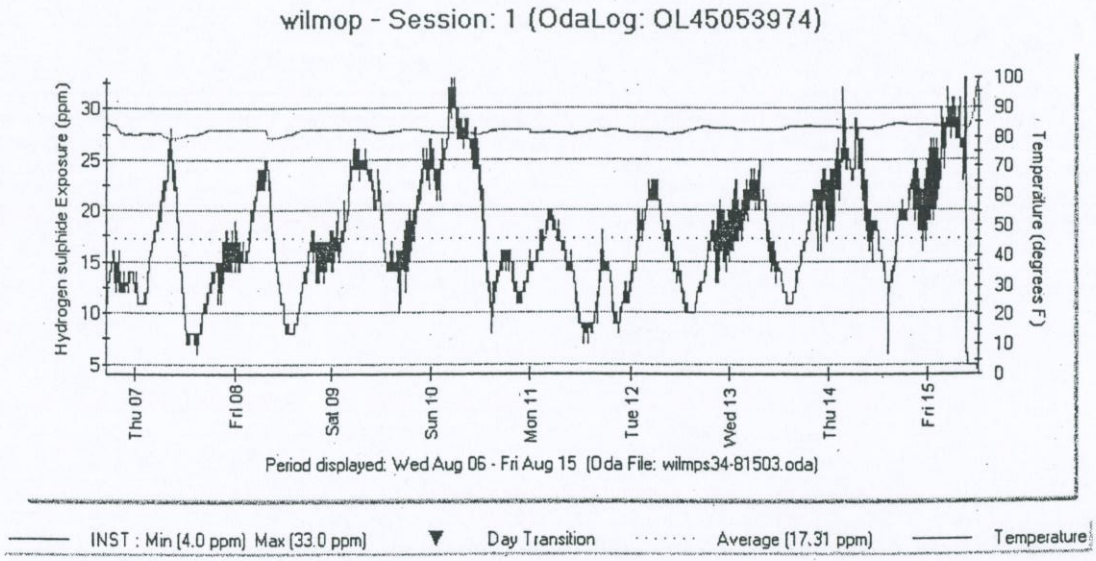

I spoke with Ken Vogt and Wyatt Blanchard about the possibility of feeding THIOGUARD® at the Wrightsville Sound Pump Station to take care of the 430,000 GPD flow that was currently untreated to determine what effects if any it may have on the gas levels in the vault at PS-35. We offered to bring in four drums of product at no charge to treat this for about seven days. We thought that we could feed approximately 30 gallons per day and lower the headspace gas numbers even more at PS-35. The graph

below shows the start up on Friday August 22, 2003. Once the feed rate stabilized, the headspace gas numbers dropped as expected.

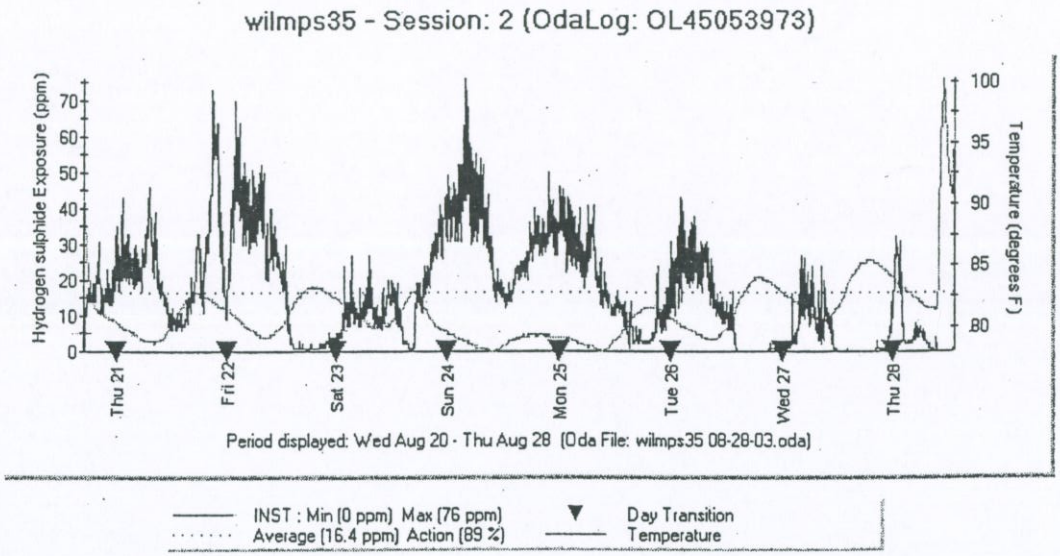

A report was submitted to Ken Vogt by email updating the current condition of the NEI. We proposed that the NEI was in control and we would like to place fourth THIOGUARD® dosing site at COW PS-34 in attempts to carry the pH all the way through to the Southside Wastewater Treatment Plant. With this arrangement, we further proposed that they decommission all of the hydrogen peroxide dosing sites on the NEI.

Phase Three of the ODOR/Corrosion Pilot Study

1. The tank was spotted and all electrical was completed on 9-2-03 with assistance from the City of Wilmington personnel.
2. Decommission hydrogen peroxide at NHC- 35, COW-34A, COW-34B and COW 36A.

The tank was filled with 2200 gallons of THIOGUARD® on Wednesday, September 3, 2003. We were having problems pacing our pump with the 4-20 milliamp signal we were receiving in to our DART control box. This was causing our pump not to ramp up or down with the flow through PS-34. A new DART Controller was ordered and replaced on the feed system. We then had a pump malfunction and it was replaced as well. The system at PS-34 was finally on line September 10, 2003.

There were a number of setbacks during the third phase of the pilot study from a pacing problem with the signal received from the City, as well as pump malfunctions in relation to Hurricane Isabel. We also lost valuable data form our Odalog Gas Logger when it was vandalized on or around September 10, 2003 at the vault at PS-35. The following data has holes in it due to the lost of the Odalog instrument but it gives a good indication that the THIOGUARD® did have the NEI in control during the month of September, 2003.

Phase Three Testing Data:

Date	PS-79 Bayshore Dr.	WB 1	PS 53 Nash Rd.	PS 34	PS 35 Comb.	PS 35 Vault	PS 34	SSWWTP Influent junction box
9-1	80 gals	27 gals						
9-2	80 gals	40 gals						
9-3	80 gals	20 gals		100 gals	8.16 pH	8.24 pH	7.89 pH	8.3 pH
9-4	60 gals	20 gals		105 gals	8.01 pH	8.31 pH	7.63 pH	8.2 pH
9-5	45 gals	27 gals		90 gals	8.11 pH	8.25 pH	7.71 pH	
9-6	45 gals	15 gals		Pump Failure	8.25 pH	8.2 pH	8.05 pH	
9-7	45 gals	20 gals						
9-8	80 gals	20 gals						
9-9	140 gals	20 gals	70 gals					
9-10	80 gals	20 gals	70 gals	New Pump	8.4 pH	8.1 pH		8.44 pH
9-11	65 gals	20 gals	60 gals	45 gals				8.22 pH
9-12	65 gals	20 gals	60 gals	50 gals				8.01 pH
9-13	65 gals	20 gals	75 gals	75 gals			8.0 pH	8.33 pH
9-14	65 gals	20 gals	70 gals	75 gals	8.2 pH	8.1 pH		8.14 pH
9-15	55 gals	27 gals	121 gals	75 gals				8.0 pH
9-16	Shutdown	27 gals	75 gals					
9-17	Hurricane		90 gals					
9-18	Isabel		90 gals					
9-19		30 gals						
9-20	Start up		90 gals					
9-21	55 gals	35 gals						
9-22	30 gals	35 gals						8.25 pH
9-23	55 gals		100 gals		8.3 pH	8.2 pH		8.21 pH
9-24	55 gals		140 gals	65 gals				8.21 pH
9-25	30 gals		80 gals	120 gals				
9-26	70 gals			75gals				7.9 pH
9-27	90 gals	40 gals	75 gals	75 gals	8.2 pH	8.4 pH		8.01 pH
9-28	90 gals	40 gals	75 gals	60 gals				
9-29	90 gals	35 gals		60 gals				8.0 pH
9-30		27 gals		60 gals				
Average	69.5 gals	26 gals	83 gals	88 gals				

During Hurricane Isabel we shut PS 74 down. It is located adjacent to a tidal creek and we did not want to risk the loss of the feed pump from the storm surge.

You begin to see the seasonal trend downward in THIOGUARD® demand due to the decrease in wastewater flow as well as a decrease in temperature. You could see a decrease in THIOGUARD® dosage of 10-15% from summer to winter.

Based on the averages from the three phases, the following conclusions can be made on average dosing rates:

PS 79 Bayshore Dr.	WB #1	PS –53 Nash Rd.	PS-34	Wrightsville Sound
85 gpd	30 gpd	90 gpd	90 gpd	30 gpd (If needed)

The numbers above reflect 325 gallons per day of THIOGUARD® to treat and maintain control of the NEI. The cost for THIOGUARD® just to treat the NEI would be approximately $221,482.00 annually, not foreseeing any additional dosing sites.

According to our notes, there are three other streams coming in to the Southside Plant. There looks as though there are five hydrogen peroxide dosing sites on these three streams. If it is determined that the dissolved sulfide levels warrant treatment, the map may suggest that you could place three additional THIOGUARD® units in strategic points of the Southside collection system and take care of the odor and corrosion in those lines all the way to the plant. Those sites being Mott's Creek PS-69, Echo Farms COW-36 and COW-14, if it is determined that the sulfide levels warrant treatment.

There are two hydrogen peroxide dosing sites on the Northside System of which one is 4-5 MGD and the other being 1-2 MGD. This would require two THIOGUARD® dosing sites. With a combined flow of 5-7 MGD and a feed rate of 50 gallons per million flow, the City would feed approximately 250-350 GPD. You would be looking at a cost of approximately $168,000 per year to feed the section of the collection system. More study of the Northside system would be needed to determine dissolved sulfide levels, and trouble spots for odor and corrosion. This side of the collection system is fairly simple in design and treat ability.

Downstream Affects of THIOGUARD® at the Wilmington Southside Plant:

Sludge Volume Index Improvement:

Solids increases in the initial dosing of THIOGUARD® are normal as the pH rise saponifies the fats, oils and grease (FOG) and moves the liquefied FOG from the sewer surfaces to the treatment plant where it can be effectively removed. This is a benefit that was outlined in our proposal and can lead to improved FOG control throughout the THIOGUARD® treated portion of the sewer system and wastewater treatment plant. This initial cleansing of the lines may lead to a temporary increase in BOD but typically turns around after the FOG slug clears the plant. The increase in SVI from faster settling sludge due to divalent cation bridging of sludge particles is typically viewed as a benefit to the clarification stage of the plant. A low sludge blanket allows for less carry over of sludge to the disinfection stage of the plant. We routinely see reductions in BOD from this benefit, not increases in BOD or the need for increased disinfection chemical dosing. Also, most WWTPs are limited by the rate at which the system can separate solids from water (clarification). Increasing the effective capacity of the clarifiers by running a lower sludge blanket with a more concentrated sludge can be view as an increase in the capacity of the WWTP. A more concentrated sludge that settles well will form a good sludge blanket that is well suited for pin floc removal.

Dewatering:

Having a sludge that is quick settling due to divalent cation bridging also lends itself to improve dewatering. A reduction or elimination of polymers used in sludge pressing operations is typical with the use of magnesium hydroxide.

Anaerobic Digestion:

Although the introduction of magnesium compounds into the wastewater treatment plant may alter the digester chemistry, not enough free magnesium is typically available to lead to struvite formation. A few technical papers on struvite formation have been submitted to you for review. We have had no struvite issues at any plant un which we sell THIOGUARD®. A higher pH in the digester will lead to increased methane production, an indicator of good digestion. The residual magnesium hydroxide also helps to buffer acid formation in the digester.

Alkalinity Supplementation:

Alkalinity loss from nitrification processes is addressed with the use of THIOGUARD® base addition. The residual alkalinity is typically enough to buffer the loss from nitrification, if it occurs. Other benefits of THIOGUARD® addition are outlined below.

Review of the Benefits of THIOGUARD® TST application:

The following is extracted from the initial proposal as a review:

THIOGUARD® is a safe, magnesium hydroxide based, non hazardous chemical. It is unregulated and Generally Recognized as Safe (GRAS).

THIOGUARD® controls hydrogen sulfide through pH elevation/adjustment and sulfide precipitation mechanisms. Gently raising the pH to approximately 8.2 will keep sulfides in a liquid phase as HS^-, thereby reducing hydrogen sulfide odors and related sewer corrosion.

THIOGUARD® adds beneficial alkalinity to downstream waste treatment plants. This generally will lead to an overall increase in efficiency at the wastewater treatment plant. It provides higher alkalinity to buffer acid generated from biological processes, i.e. nitrification. Lower SVI (Sludge Volume Index) in clarifiers leading to better dewatering and the possible reduction of clarification and dewatering polymers/chemicals. Adds divalent cation to aid in floc coagulation and may eliminate the need for alkalinity/pH adjustment with lime at the plant.

Incidental over treatment with THIOGUARD® will not threaten sensitive microbiological populations in the waste treatment system, as it will not exceed a pH of 9.0. Magnesia based THIOGUARD® actually provides micronutrient to some treatment process microorganisms, keeping them healthy and active.

THIOGUARD® does not raise any hazard concerns, to the environment or to humans. There is little threat to the public should someone tamper with the THIOGUARD® storage and feed system.

THIOGUARD® is typically the most cost effective way to deal with hydrogen sulfide odors and related corrosion problems. THIOGUARD® is most cost effective when high levels of dissolved sulfide are present.

Continuous addition of THIOGUARD®, when coupled with a topical spray program for manholes and sewer crowns, can virtually eliminate costly hydrogen sulfide based sewer corrosion while controlling malodorous Hydrogen Sulfide gas. A program of this nature could satisfy CMOM regulations for maintenance and extension of sewer infrastructure.

THIOGUARD® helps with the removal of FOG (Fats, Oils and Grease) through Saponification and absorption mechanisms. Elevating the pH helps break up FOG (Saponification) and the high surface area of magnesium hydroxide leads to a high rate of absorption of FOG. Addition of THIOGUARD® will help keep the FOG in a liquid phase for transport to the POTW where it can be biologically treated and removed.

Summary/Conclusion:

We believe the data demonstrates the viability of THIOGUARD® as effective product and approach to controlling hydrogen sulfide gas and corrosion problems in the Northeast Interceptor of the Wilmington, NC collection system. We further believe these results can be applied to the entire Wilmington are sewer collection system.

Utilizing THIOGUARD® it is possible for the City of Wilmington, New Hanover County and Wrightsville Beach to implement a comprehensive, system wide strategy that is both safe and effective. This strategy will eliminate hydrogen peroxide addition at some fifteen dosing sites with its associated safety concerns, liability high cost and maintenance issues. Controlling the hydrogen sulfide odor with THIOGUARD® also eliminates or drastically slows the rate of corrosion from hydrogen sulfide in the sewer system and the two

wastewater plants. Corroded concrete and metal parts will no longer be under attack from acid produced from oxidized hydrogen sulfide gas.

Although THIOGUARD is a patented and proprietary to Premier Chemicals, LLC and its authorized distributors, there are many other chemical, biological and physical treatment options available to the city, as evident by the existing treatment program. Use of magnesium hydroxide for this application is, however, the intellectual property of Premier Chemicals, LLC and has been approved as a sole source chemical option for many municipalities across the U.S. of A.

In closing, we propose to the Odor Team/Consortium that if we are the low bidder for the City of Wilmington Odor and Corrosion Control Contract, we would work in close contact with the respective collections supervisors to identify the sewer lines that are producing high levels of dissolved sulfide. And once identified, make sure the best suitable locations for addition are identified and used for the feed THIOGUARD®.

Please feel free to contact Mr. Scott Fisher, with Brenntag Southeast, or Mr. Chris Armstrong, with Premier Chemicals, LLC with any questions you may have in regard to THIOGUARD® and/or our products and services in general. Scott can be reached at 910-645-6569 and Chris can be reached at 540-961-3979. We look forward to your comments and response to this post field trial report.

Respectfully,

Scott Fisher
Brenntag Southeast, Inc.
Market Manager
Water Treatment Business

Chris Armstrong
Sales Manager, Mid Atlantic Region
Premier Chemicals, LLC

cc: Ronn Chase
Tom Miller
John Hartman
Gil Steadman

APPENDIX C

Odor and Corrosion Control Program
2005 Historical Data Summaries

WB#1 Odor and Corrosion Control Data

Sampling Site - ARV at WB#8
Dose Site - WB#1

	Date											
Monthly Averages	Jan-05	Feb-05	Mar-05	Apr-05	May-05	Jun-05	Jul-05	Aug-05	Sep-05	Oct-05	Nov-05	Dec-05
Hydrogen Peroxide Deliveries (gal)	409		376		417		405	447		330	278	
Total Sulfide (mg/l)	0.3	0.3	0.3	0.3	0.4	0.4	0.5	0.5	0.6	0.5	0.5	0.6
H_2S in Air (ppm)	N/A	N/A	N/A	N/A	N/A	N/A	N/A	N/A	N/A	N/A	N/A	N/A
pH	7.1	7	7.1	7	7	7	7.1	7	6.7	7	7	7
Temp (°F)	60	59	58	62	64	72	80	82	80	76	73	64
Chemical Dose Rate	8	6	7	6	7	6	9	8	8	8	9	8
Average H_2O_2 (gpd)	7	6	7	6	7	7	9	8	9	9	8	8

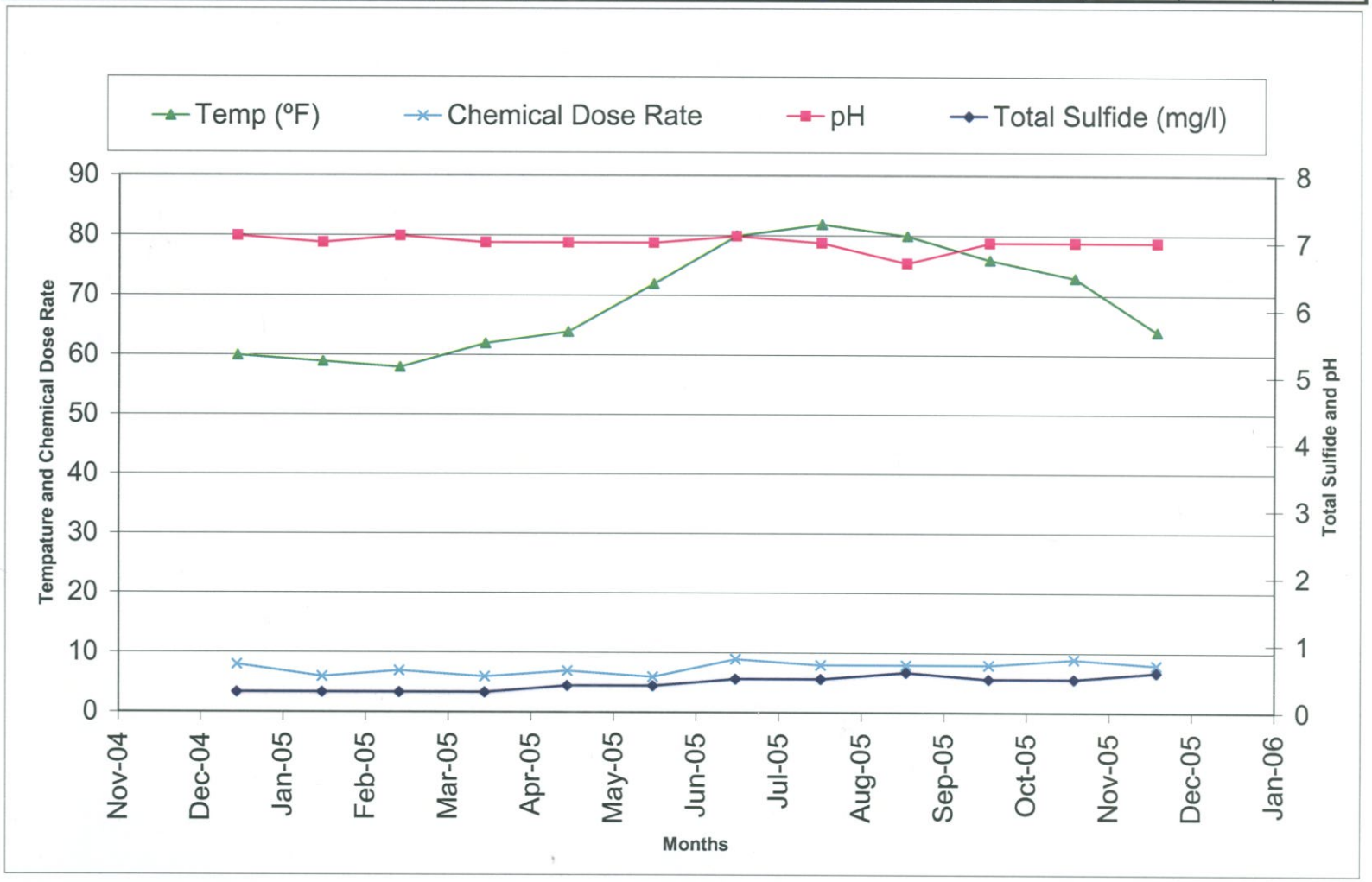

WB#5 Odor and Corrosion Control Data

Sampling Site - COW - PS #35 - Manhole (Flow from WB#5)
Dose Site - WB#5

	Date											
Monthly Averages	Jan-05	Feb-05	Mar-05	Apr-05	May-05	Jun-05	Jul-05	Aug-05	Sep-05	Oct-05	Nov-05	Dec-05
Hydrogen Peroxide Deliveries (gal)	1613		1527	601	2337		1418	1063		1856	1776	
Total Sulfide (mg/l)	0.2	0.2	0.1	0.2	0.2	0.3	0.4	0.3	0.4	0.6	0.5	0.3
H_2S in Air (ppm)	0	0	0	0	0	0	0	0	0	0	0	0
pH	7.1	7	7	7	7	7	7	7	7	6.9	7	7
Temp (°F)	60	58	59	62	64	74	79	82	80	76	73	65
Chemical Dose Rate	35	29	32	30	37	43	42	40	41	55	45	39
Average H_2O_2 (gpd)	35	29	31	30	39	41	43	40	41	56	53	39

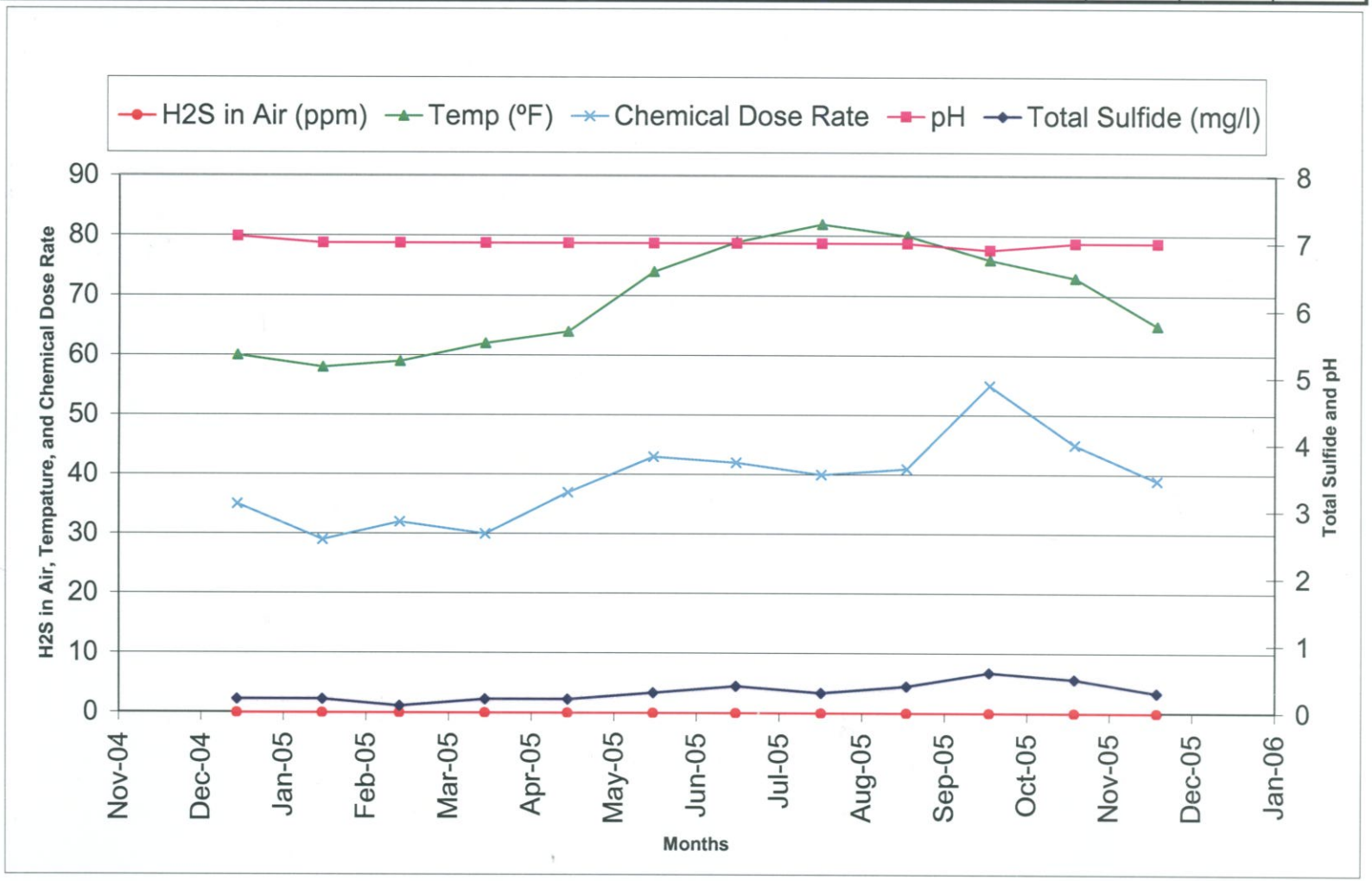

COW PS#35 Odor and Corrosion Control Data

Sampling Site - Greenville Loop Tap (Flow from COW PS #35)
Dose Site - COW PS #35

	Date											
Monthly Averages	Jan-05	Feb-05	Mar-05	Apr-05	May-05	Jun-05	Jul-05	Aug-05	Sep-05	Oct-05	Nov-05	Dec-05
Hydrogen Peroxide Deliveries (gal)	2282		2208		3189		1395	1976	1814		1449	1476
Total Sulfide (mg/l)	0.3	0.3	0.3	0.3	0.3	0.4	0.4	0.4	0.3	0.3	0.3	0.3
H_2S in Air (ppm)	N/A	N/A	N/A	N/A	N/A	N/A	N/A	N/A	N/A	N/A	N/A	N/A
pH	7	7	6.9	6.9	7	7	7	6.9	6.9	6.9	6.9	6.9
Temp (ºF)	59	58	57	61	63	70	78	82	80	76	71	63
Chemical Dose Rate	40	36	31	39	46	44	43	49	42	44	47	48
Average H_2O_2 (gpd)	39	36	33	40	52	44	44	49	41	42	47	43

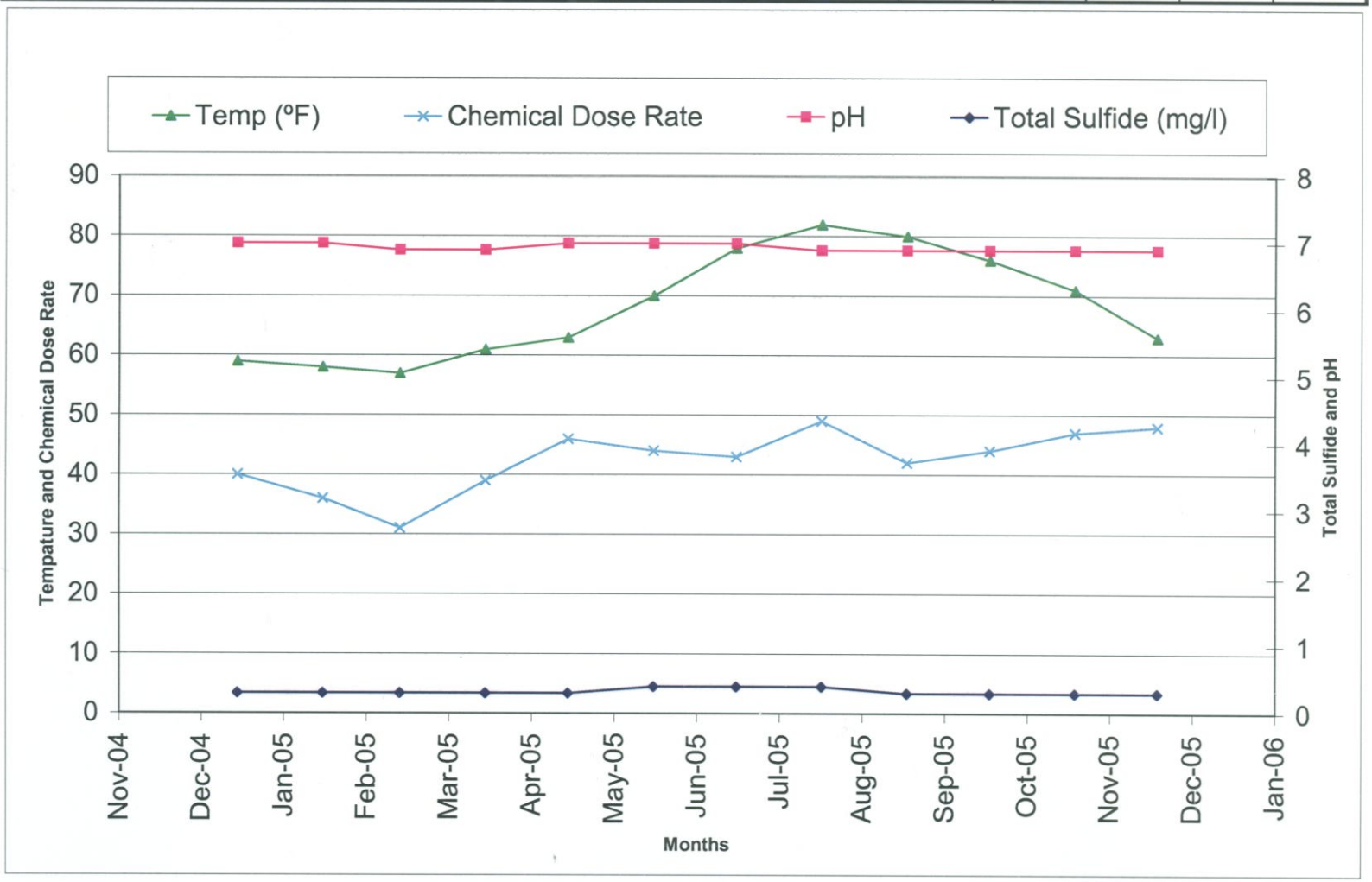

NHC#43 Odor and Corrosion Control Data

Sampling Site - COW PS#34 - Influent Manhole Treated (Flow from NHC #43)
Dose Site - NHC #43

	Date											
Monthly Averages	Jan-05	Feb-05	Mar-05	Apr-05	May-05	Jun-05	Jul-05	Aug-05	Sep-05	Oct-05	Nov-05	Dec-05
Hydrogen Peroxide Deliveries (gal)	2032		1280		1929	1804		1592	1494		1470	
Total Sulfide (mg/l)	0	0	0	0	0	0	0	0	0.2	N/A	N/A	N/A
H_2S in Air (ppm)	16	14	17	19	19	27	30	29	45	N/A	N/A	N/A
pH	7	6.9	6.9	6.9	6.9	6.9	6.9	6.9	6.9	N/A	N/A	N/A
Temp (ºF)	59	57	58	60	63	72	78	81	80	N/A	N/A	N/A
Chemical Dose Rate	32	33	29	38	33	32	35	38	35	49	36	34
Average H_2O_2 (gpd)	32	32	29	34	34	30	37	38	36	46	37	33

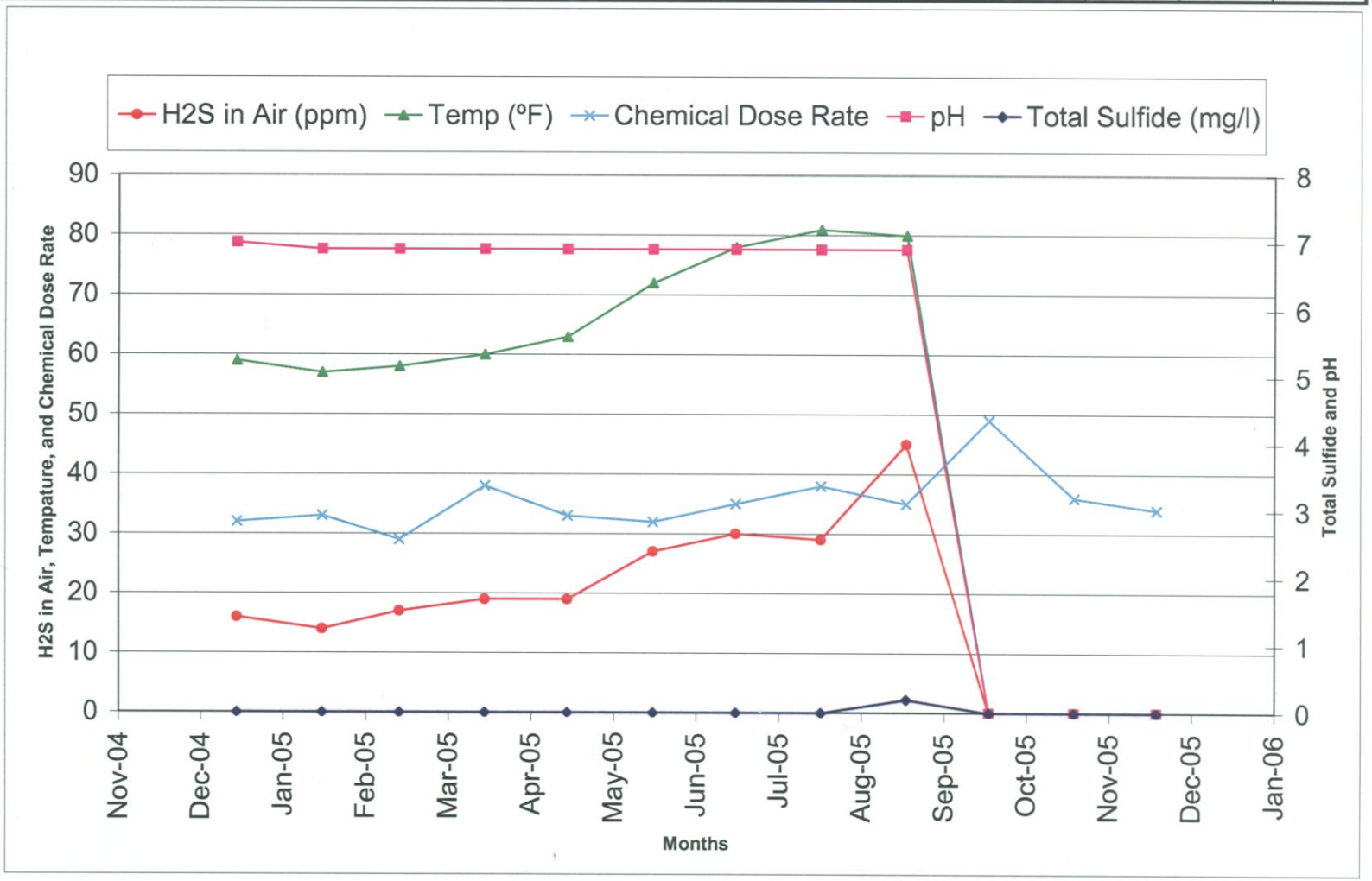

COW-PS#36A Odor and Corrosion Control Data

Sampling Site - SWWTP - Tap on NEI line
Dose Site - COW-PS#36A

	Date											
Monthly Averages	Jan-05	Feb-05	Mar-05	Apr-05	May-05	Jun-05	Jul-05	Aug-05	Sep-05	Oct-05	Nov-05	Dec-05
Hydrogen Peroxide Deliveries (gal)	807	1451	683	1904	2172	2609	1561	1119	2136	427	2134	2004
Total Sulfide (mg/l)	0.2	0.2	0.2	0.4	0.4	0.4	0.3	0.4	0.4	0.3	0.4	0.5
H_2S in Air (ppm)	N/A	N/A	N/A	N/A	N/A	N/A	N/A	N/A	N/A	N/A	N/A	N/A
pH	7	7	6.9	7	7	6.9	7	6.9	6.9	6.9	6.9	7
Temp (ºF)	59	58	57	62	63	72	78	81	80	75	71	64
Chemical Dose Rate	49	55	46	52	52	49	64	56	50	58	56	51
Average H_2O_2 (gpd)	49	51	48	54	52	50	66	58	54	59	69	50

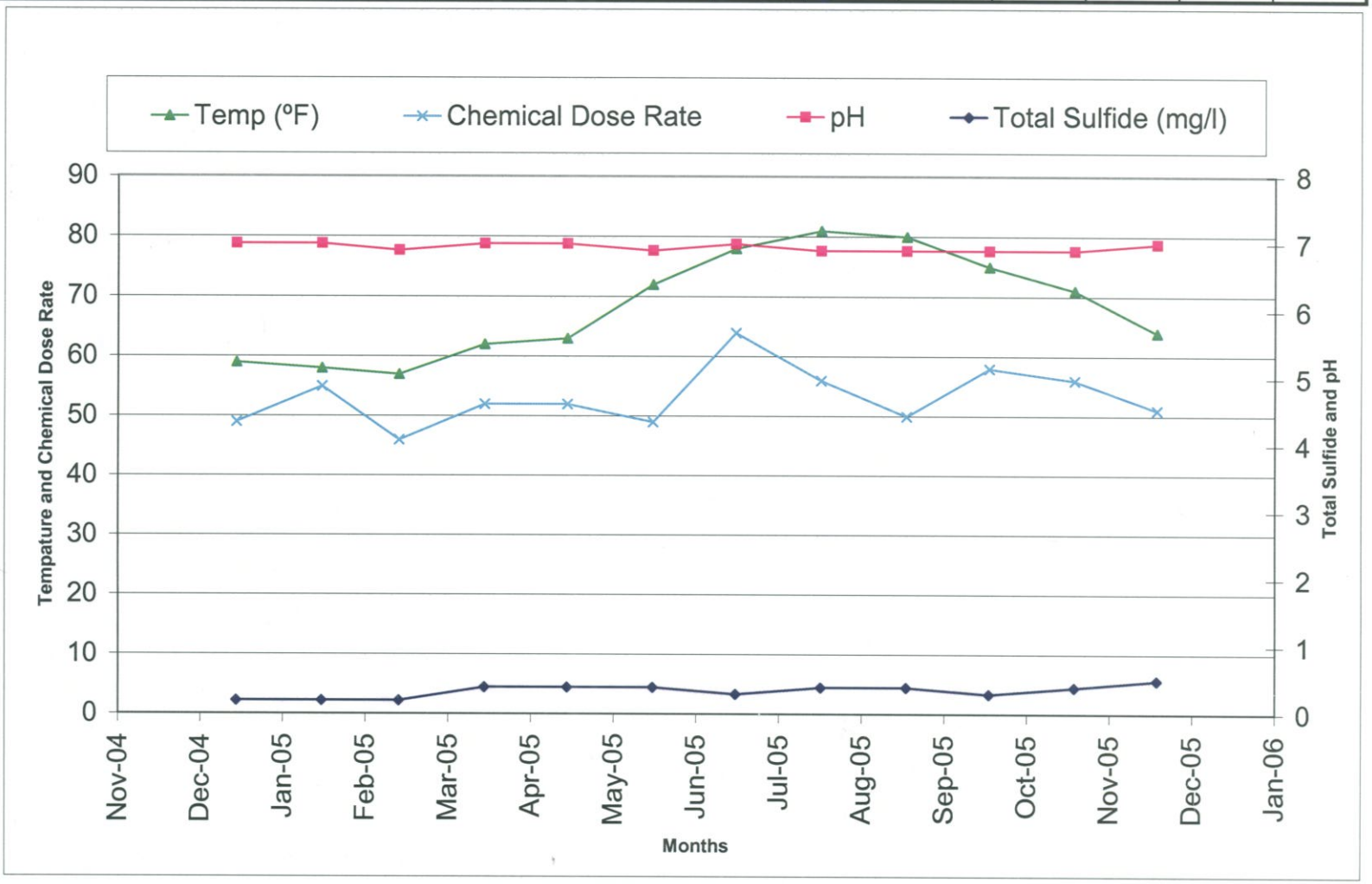

NHC#77 Westwood Dr. LS Odor and Corrosion Control Data

Sampling Site - Military Cutoff Road Tap on 16" Line from NHC #77
Dose Site - NHC#77 Westwood Drive LS

	Date											
Monthly Averages	Jan-05	Feb-05	Mar-05	Apr-05	May-05	Jun-05	Jul-05	Aug-05	Sep-05	Oct-05	Nov-05	Dec-05
Hydrogen Peroxide Deliveries (gal)	1950	2279	2058	1856	1668	1808	3475	1846	3501	1137	3192	2077
Total Sulfide (mg/l)	0.3	0.3	0.3	0.3	0.3	0.3	0.3	0.4	0.2	0.3	0.2	0.3
H_2S in Air (ppm)	N/A	N/A	N/A	N/A	N/A	N/A	N/A	N/A	N/A	N/A	N/A	N/A
pH	7.1	7	7	7	7	7	7	7	7	6.9	7	7
Temp (ºF)	60	59	59	62	65	71	79	82	81	77	71	64
Chemical Dose Rate	69	60	60	63	66	68	80	71	80	91	73	69
Average H_2O_2 (gpd)	68	60	58	62	67	69	81	77	81	87	70	70

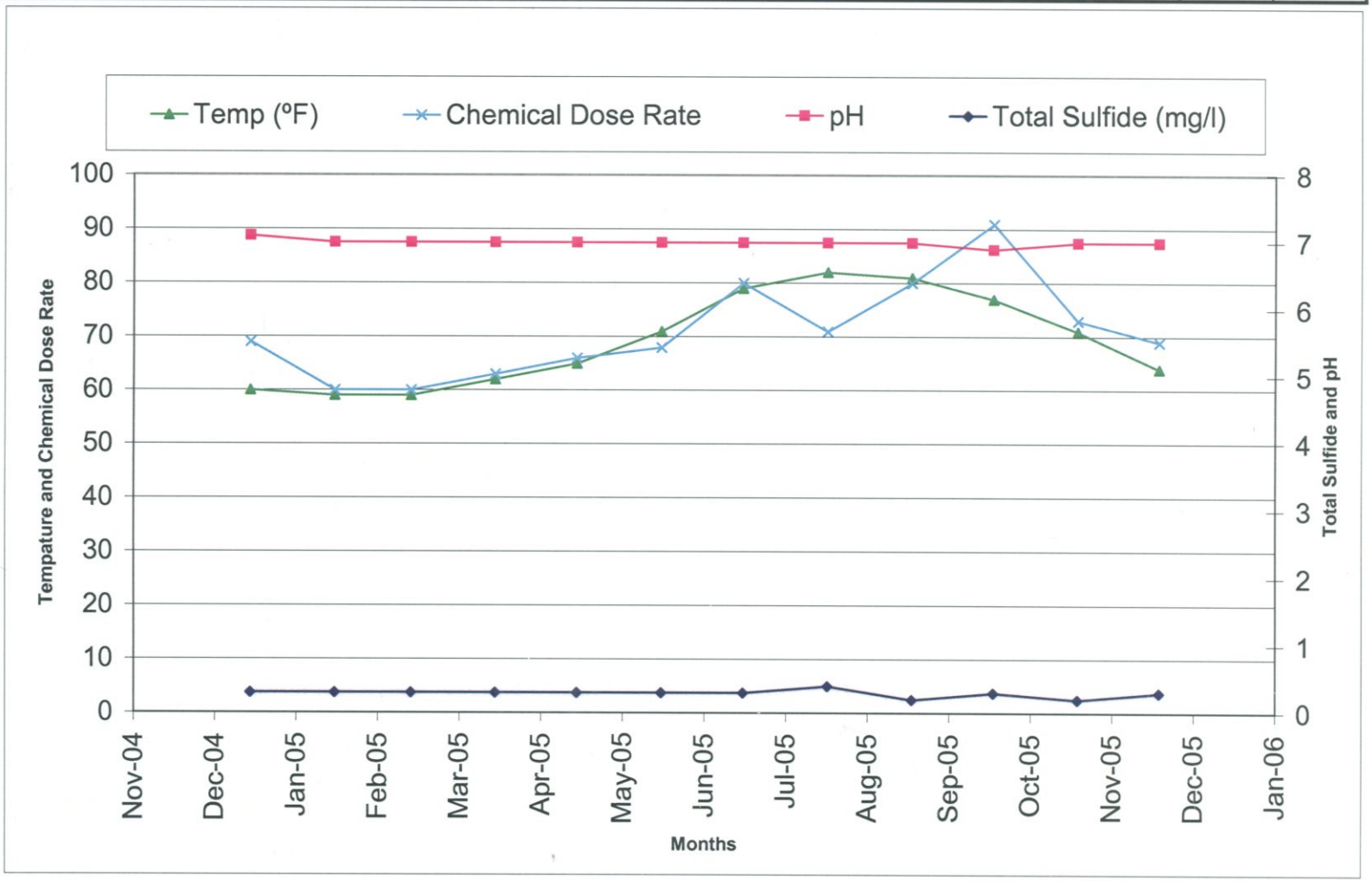

NHC#35 Shamrock PS Odor and Corrosion Control Data

Sampling Site - COW-PS #34 Influent Box from NHC #35
Dose Site - NHC#35 Shamrock PS

	Date											
Monthly Averages	Jan-05	Feb-05	Mar-05	Apr-05	May-05	Jun-05	Jul-05	Aug-05	Sep-05	Oct-05	Nov-05	Dec-05
Hydrogen Peroxide Deliveries (gal)		785			437	1017				1127		
Total Sulfide (mg/l)	0	0	0	0	0	0	0	0	0	0.1	0	0
H_2S in Air (ppm)	0	0	0	0	0	0	0	0	0	0	0	0
pH	7	7	6.9	7	7	7	7	7	7	6.9	7	6.9
Temp (°F)	59	58	58	61	64	72	79	82	80	76	72	64
Chemical Dose Rate	16	13	9	10	12	9	10	10	9	14	7	7
Average H_2O_2 (gpd)	15	12	10	11	12	10	9	10	9	13	8	7

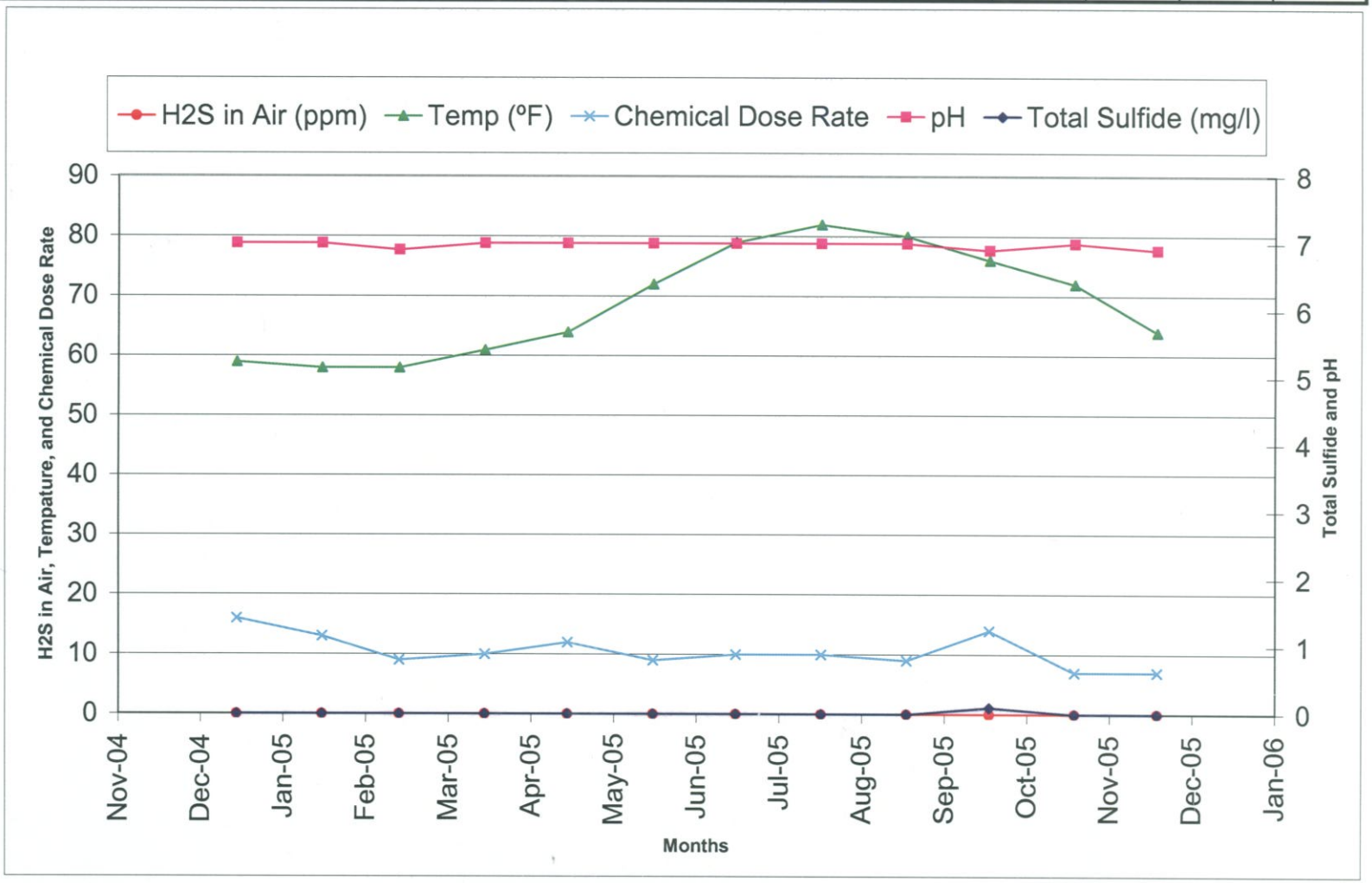

Ogden Park Odor and Corrosion Control Data

Sampling Site - Westwood (NHC-77)
Dose Site - Ogden Park

	Date											
Monthly Averages	Jan-05	Feb-05	Mar-05	Apr-05	May-05	Jun-05	Jul-05	Aug-05	Sep-05	Oct-05	Nov-05	Dec-05
Hydrogen Peroxide Deliveries (gal)	912	1124	1114		1200	827	937	945	1988		1004	972
Total Sulfide (mg/l)	0	0	0.3	0	0	0	0.1	0	0	0	0	0
H_2S in Air (ppm)	0	0	2	0	0	0	0	0	0	0	0	0
pH	7.1	7	7	7	7	7	7.1	7	7	6.9	7	7
Temp (ºF)	61	59	58	61	64	72	79	82	81	76	72	63
Chemical Dose Rate	29	27	23	31	30	32	30	34	33	32	28	28
Average H_2O_2 (gpd)	30	28	24	27	31	33	31	34	35	31	29	29

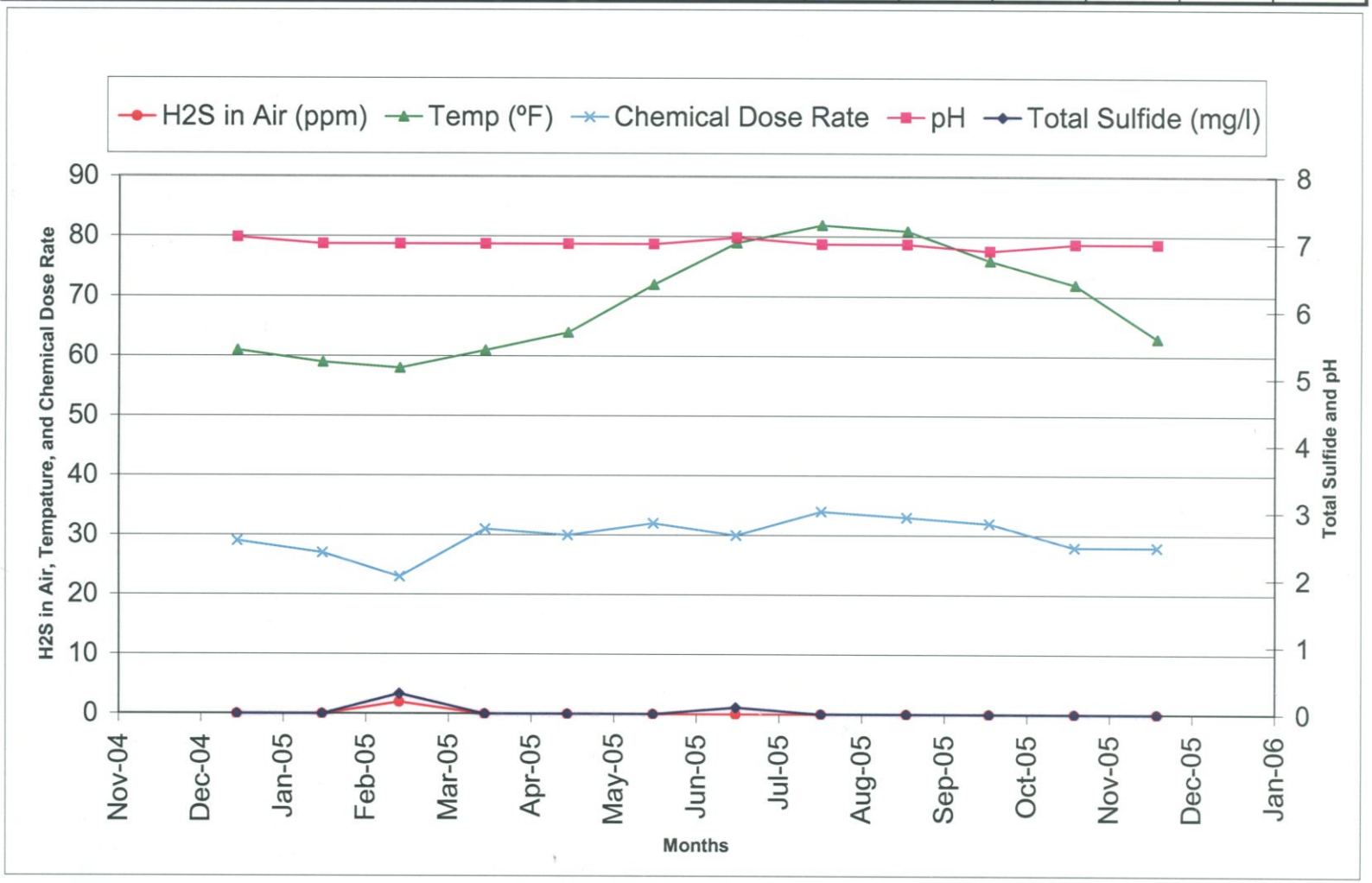

NHC #77 (Partially Treated) Odor and Corrosion Control Data

Sampling Site - COW-PS#35 Influent Box from NHC #77
Dose Site - NHC #77 (partially treated)

	Date											
Monthly Averages	Jan-05	Feb-05	Mar-05	Apr-05	May-05	Jun-05	Jul-05	Aug-05	Sep-05	Oct-05	Nov-05	Dec-05
Hydrogen Peroxide Deliveries (gal)												
Total Sulfide (mg/l)	0.5		0.5		0.5		0.9	1	0.6		0.6	
H_2S in Air (ppm)	40		40		29		70	171	61		82	
pH	6.9		6.9		6.9		6.9	6.9	6.9		6.9	
Temp (°F)	60		58		64		77	81	80		72	
Chemical Dose Rate	68		58		69		56	47	82		75	
Average H_2O_2 (gpd)												

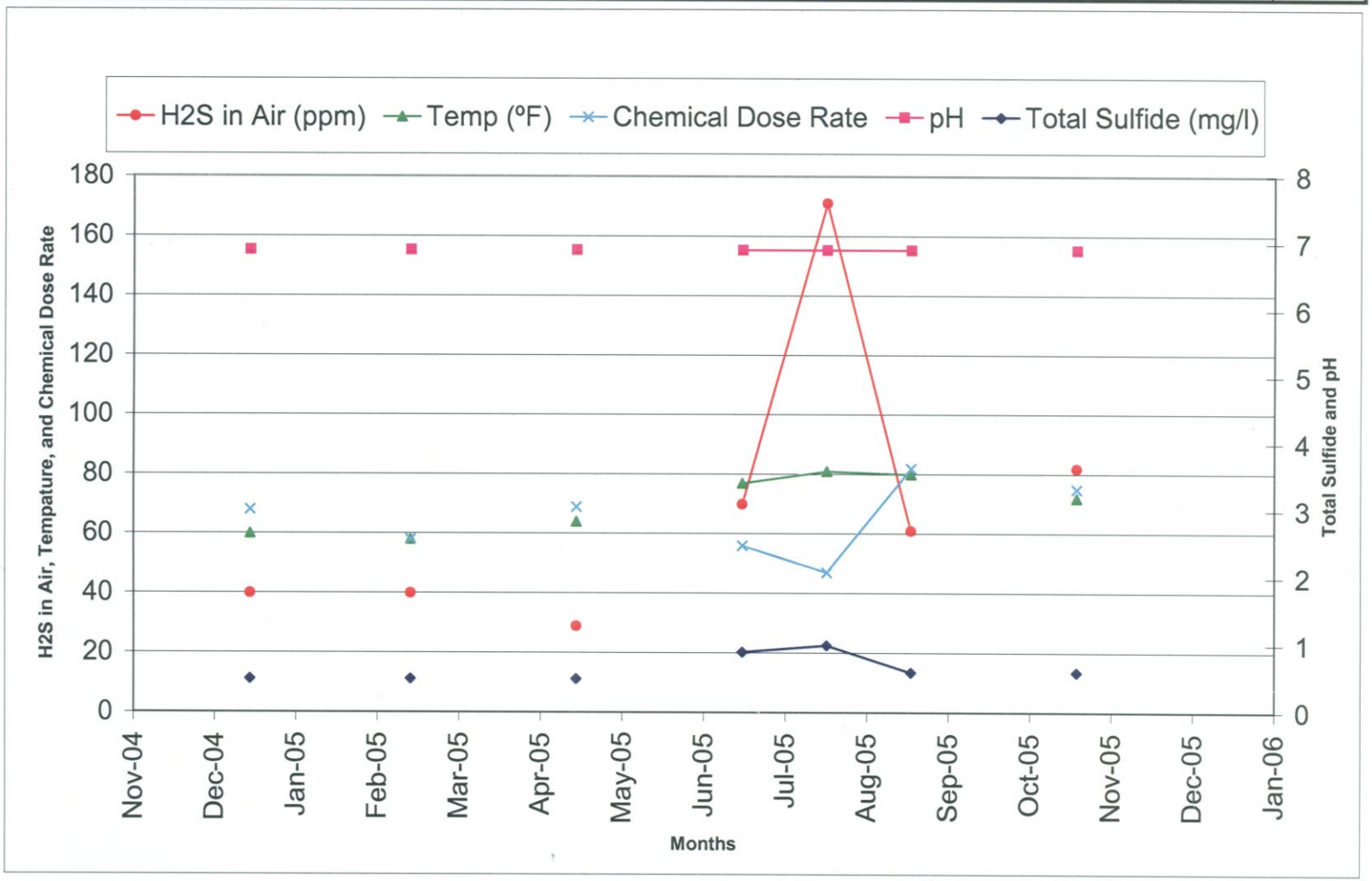

Untreated Sewage Upstream of PS#35 Odor and Corrosion Control Data

Sampling Site - COW-PS #35 - NHC in Grit Chamber
Dose Site - Untreated

	Date											
Monthly Averages	Jan-05	Feb-05	Mar-05	Apr-05	May-05	Jun-05	Jul-05	Aug-05	Sep-05	Oct-05	Nov-05	Dec-05
Hydrogen Peroxide Deliveries (gal)												
Total Sulfide (mg/l)	0.5	0.5	0.4	0.5	0.5	0.4	0.6	0.7	0.6	0.8	0.5	0.4
H_2S in Air (ppm)	0	0	0	0	0	0	1	1	0	0	0	0
pH	7	6.9	6.9	6.9	6.9	7	6.9	6.9	6.9	6.9	6.9	6.9
Temp (°F)	59	57	58	62	63	72	78	81	79	75	72	64
Chemical Dose Rate												
Average H_2O_2 (gpd)												

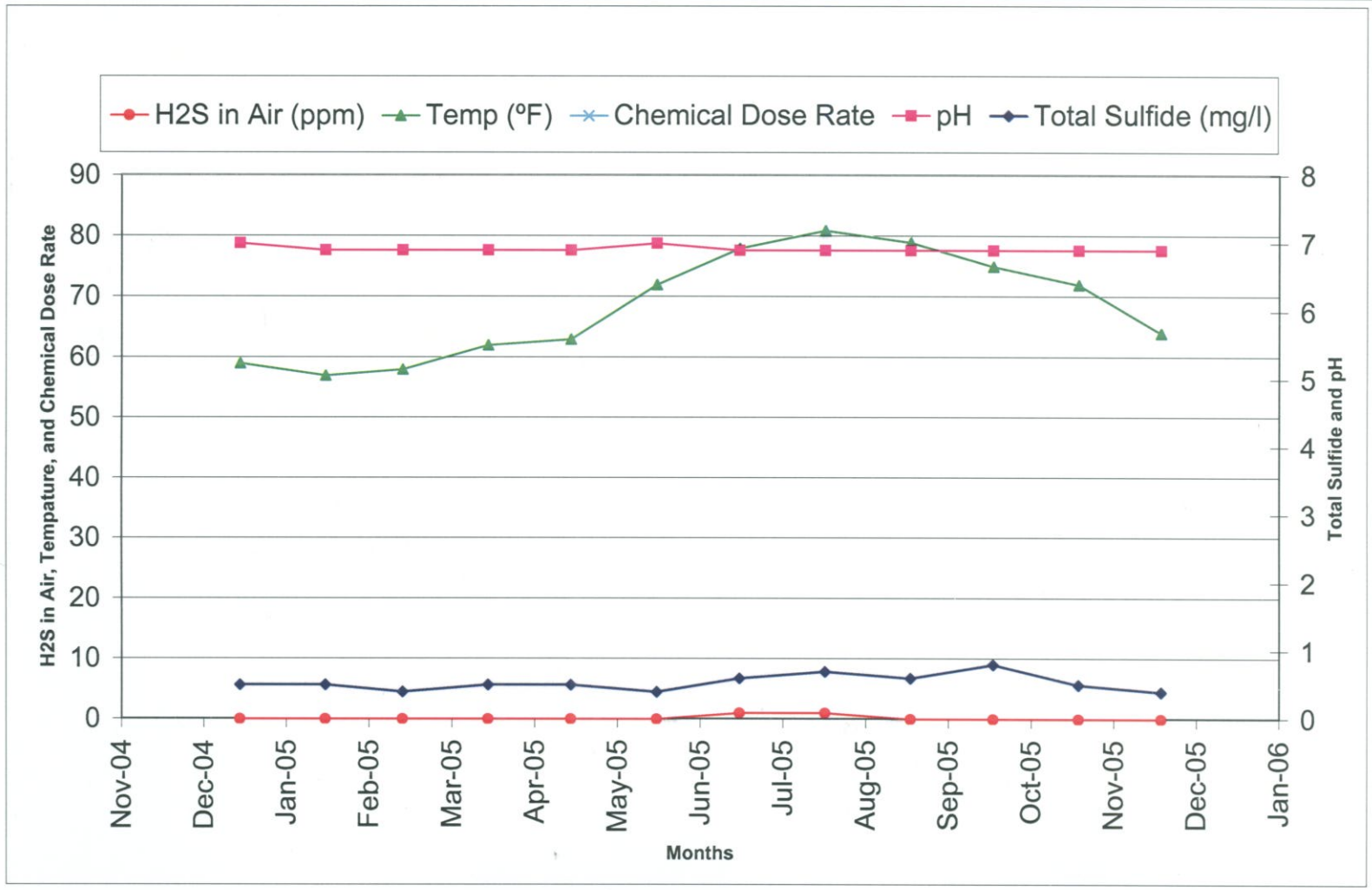

APPENDIX D

USFILTER Northeast Interceptor Corrosion Evaluation

USFilter
A Siemens Business

TECHNICAL MEMO

DAVIS PROCESS
2650 TALLEVAST ROAD
SARASOTA, FL 34243

TELEPHONE 941-355-2971
FACSIMILE 941-351-4756

TO Tim Reneau, Bill Stratton

FROM David L Morano

DATE 04/17/06

RE: Northeast Interceptor Corrosion Evaluation

Based on the as-built drawings of the Northeast Interceptor, the flow, and distance data provided, the following is a brief technical summary of corrosion points of interest.

Background

The corrosion study of the Northeast Interceptor (NEI) in Wilmington, NC was modeled with the following information:

	Distance (feet)	RT (hours)	Flow (MGD)
PS 35 to NHC 43	10,032	1.89	3.0
NHC 43 to PS 34	6,336	1.27	3.5
PS 34 to PS 36A	26,928	3.38	4.5
PS 36A to SSWWTP	5,808	0.73	4.5

Hydrogen peroxide is currently applied directly into the NEI at pump stations 34, 35, 43, and 36A. As built drawing were provided with the plan-profile of the 24" force main on Sheets 2 – 24. Markers on the sheets were used to indicate areas of concern in this study.

Assumptions

To complete the study the following assumptions were made: 1) Sudden elevation changes in the force main greater than 3-4 feet between markers create conditions conducive for off gassing. These points were usually accompanied by an air relief valve. 2) Gentle changes in elevations following long continuous rises in the elevation could also cause off gassing. 3) Sudden changes in the force main direction could cause excessive turbulence and release of corrosion causing gasses. 4) Hydrogen peroxide, applied at too low a rate can begin to lose it's effectiveness after two hours of retention time. 5) Without any treatment, corrosion could begin after an hour in the NEI.

DAVIS PROCESS
2650 TALLEVAST ROAD
SARASOTA, FL 34243

TELEPHONE 941-355-2971
FACSIMILE 941-351-4756

Results

The following table lists the Sheet number and the Marker number of areas of possible concern in the force main if no hydrogen peroxide was being added:

Without Treatment Table

Sheet #	Marker
21	95+00
19	39+00
17	Turn 'A'
17	Turn 'B'
17	Turn 'C'
12	228+00
10	192+00
7	139+00
6	108+00
6	91+00
4	39+00
2	13+00

This next table indicates areas along the force main that could see impacts from corrosion if hydrogen peroxide is under fed:

Possible Under-treatment Table

Sheet #	Marker
10	192+00
7	139+00
6	108+00
6	91+00
4	39+00
2	13+00

Summary

The Northeast interceptor is a fairly flat and well laid out force main. Hydrogen peroxide (H_2O_2), applied properly will effectively protect the force main from corrosion. Caution should be taken care that the H_2O_2 is fed appropriately and optimized for this application.

APPENDIX E

Odor Corrosion Control Program Contract with proposed revisions

January 14, 2004

RE: ODOR AND CORROSION CONTROL
RFP NO: _____

Dear Sir or Madam:

The enclosed Request for Proposal should provide your firm with sufficient information to enable you to prepare and submit a proposal for providing Odor and Corrosion Control Services for Wastewater Collection Systems.

Proposals will be received from firms specializing in providing chemicals and services for hydrogen sulfide control, from environmental service firms, or from environmental consulting engineering firms. Their technical qualifications shall include extensive satisfactory experience or participation in comprehensive, conclusive field trials or demonstrations specific to the CITY's odor corrosion control program. The firms submitting the proposal shall meet the qualifications for technical services outlined in the proposal within the firm's own personnel and resources. Provided the firm's technical services qualification is satisfactory, the firm may subcontract for equipment supply and installation unless such equipment supply and installation has been provided by the City. The firm may also subcontract for the manufacture and delivery of chemical product.

In order for your proposal to be considered responsive it must include: (1) a list of staff assigned to the project, naming the Project Manager and resumes' of staff assigned technical services on this project; (2) a list of at least five (5) references of related work performed in the past; (3) a list with sizes of tanks and pumps to be supplied at each site stated within the Request for Proposal, including "cut sheets" and specifications of the equipment; (4) a plan designating which chemical will be proposed at each application site for odor and corrosion control and its projected usage at each application site for each of the three years covered under this contract and (5) a proposed fee schedule of lump sum prices on equipment rental, mobilization and demobilization, and technical services and unit prices for chemical product consistent with completion of Contract Section 4.0 Pricing Schedule. The Proposal must also include any information, data, references, or other items identified as areas that the committee will consider in evaluating the proposal as outlined below.

Responsive proposals will be considered separately by a Selection Committee who will select and may invite the best qualified firm or firms for a personal interview. In considering the ranking of proposals, the Committee will take into account (1) assurances by the firm of product quality and purity, even above and beyond the minimum requirement in the attached draft scope of services; (2) extent of qualifications and experience of the firm in hydrogen sulfide control in wastewater collection systems; (3) evaluation of safety, spill control(s), and emergency response record(s)/issues; (4) technical competence, clarity and cost effectiveness of the submitted plan for hydrogen sulfide control services, including the willingness to provide assurances of the plan's cost and including innovative ideas for cost reduction specific to the City's system; (5) factually-based assurances by the firm or a strategy to avoid the potential of residuals from product reactions in hydrogen sulfide control reaching threshold limits which could significantly change wastewater pH, or inhibit wastewater treatment processes and/or effluent testing quality; and (6) fees.

Proposals which are not responsive will be rejected. For purposes of projecting chemical use for 2004 – 2006, you may assume that chemical use will increase 5% annually over the most recent representative year's data.

The current contract pricing, 2001 – 2003 chemical use and OCCP CONTRACTOR odor/corrosion monitoring results, 2001 – 2003 loadings, and the results of recent field demonstrations are available for prospective OCCP CONTRACTOR inspection.

Deleted:

Your proposal should be submitted to Mr. Steve Bridges, Purchasing Agent, City of Wilmington, 320 Chestnut Street, or P.O. Box 1810, Wilmington, N.C. 28402 no later than 3:00 p.m. , Wednesday, January 28, 2004 in order to be considered.

Questions about the scope of work for the project should be addressed to Mr. Kenneth L. Vogt, Jr. at (910) 341-7890.

Sincerely,

Steve Bridges, Director Central Services

Enclosures:

Copies: Hugh Caldwell, Director Public Utilities
Kenneth L. Vogt, Jr., PE, DEE, Wastewater Treatment Superintendent

Appendices A, B, C, D

STATE OF NORTH CAROLINA **CONTRACT NO:**
COUNTY OF NEW HANOVER

AGREEMENT BETWEEN
THE CITY OF WILMINGTON, NORTHCAROLINA
AND

THIS AGREEMENT is entered into as of the _ day of ___, 2006, by and between the **CITY OF WILMINGTON, NORTH CAROLINA** (hereinafter called (**"CITY"**), a municipal corporation located in New Hanover County, North Carolina and _____ (hereinafter called the "OCCP CONTRACTOR").

Deleted: 4

W I T N E S S E T H

1. Purpose of Agreement

The purpose of this agreement is for the CITY to obtain the services of the OCCP CONTRACTOR to furnish complete equipment, chemical product, and technical services at certain application sites as required for the control of malodorous emissions and corrosion in the wastewater force main collection systems and/or treatment plants operated or regulated by the City of Wilmington, the Town of Wrightsville Beach, or the New Hanover County Water & Sewer District.-the Odor and Corrosion Control Program (OCCP).

2. Scope of Services

2.1 General

2.1.1 It is understood and agreed between the CITY and the OCCP CONTRACTOR that the OCCP CONTRACTOR shall maintain a designated Project Manager acceptable to the City throughout the term of the contract to administer the work to be performed under this agreement. The Project Manager shall have responsibility in direct control over all work performed by the OCCP CONTRACTOR on the scope of services contained herein. No substitution of Project Manager shall be made without CITY approval. Such approval by the CITY shall not be unreasonably withheld.

2.1.2 The OCCP CONTRACTOR shall provide and maintain with the CITY a list of any and all Suppliers and Subcontractors performing any of the services proposed under this agreement. The OCCP CONTRACTOR shall be responsible to the CITY for the performance of the Suppliers and Subcontractors.

2.1.3 The OCCP CONTRACTOR shall execute all services under this agreement in a manner as to not interfere with the CITY's collection and wastewater treatment system. The method of conducting services shall at all times, be subject to the CITY's approval without in any way relieving the OCCP CONTRACTOR'S

responsibility for the same. Of paramount importance at all times is the CITY's ability to continue uninterrupted operation of the utility system, to maintain the safety of the CITY district's, and town's personnel in performing necessary utility operations, and to maintain high quality and uninhibited wastewater stream and sludge stream treatment within the treatment plants and atmospheric emissions from its systems. The OCCP CONTRACTOR shall not introduce any chemical products in quantities (or containing impurities) which may inhibit the treatment plant processes, including sludge settling in clarifiers, aerobic biological activity within trickling filters and/or activated sludge processes, or anaerobic biological digestion of sludge. Chemical products in the quantities used shall not cause a "pass-through" of a constituent to plant effluent which is a violation of plant NPDES effluent standards or receiving stream standards established for the Cape Fear River by the State of North Carolina, or contribute to a failure by the CITY to pass either acute or chronic effluent toxicity test of plant effluent as required by the State of North Carolina. The OCCP CONTRACTOR unequivocally understands that the CITY's obligations to the State of North Carolina with regard to the quality of plant discharges, system atmospheric emissions, and digested sludge used as a soil amendment for agricultural purposes are of greater importance than maintaining chemical treatment for odor and corrosion control, and that the CITY reserves the exclusive right at any time to direct the OCCP CONTRACTOR to immediately reduce or cease chemical product injection from any or all application sites, without the necessity of proving in any way whether or not the chemicals caused or contributed to any problems occurring within the treatment system.

2.1.4 In the event of any emergency that may be an imminent danger to life or property, the OCCP CONTRACTOR shall take immediate action necessary to eliminate or reduce the danger, and then shall immediately notify the CITY of such action taken. In cases other than the emergency just described, the OCCP CONTRACTOR shall not operate the CITY's valves or other equipment, or make connections to CITY provided sources of electrical power or potable water without the specific approval of the CITY.

Deleted: may

2.1.5 The OCCP CONTRACTOR shall insure that all work under this agreement satisfies all present State, Federal, and local laws and regulations. The OCCP CONTRACTOR shall secure, at no additional cost to the CITY, all permits, certificates, and licenses required by law for the execution of the work under this agreement.

2.2 Service Objective of this Agreement

As part of its ongoing odor and corrosion control program, the CITY currently utilizes a system of liquid and vapor phase treatment units.

The OCCP CONTRACTOR shall provide to the CITY complete services and shall assume unit responsibility as specified herein for continuous multi-phase

(liquid and vapor) odor and corrosion control protection for force main wastewater collection systems as defined herein. Included in these complete services are:

(1) definition of application sites, control segments and chemical products used at each application site; (2) design of equipment type and sizes for application sites, and details of construction, consistent with requirements of this agreement; (3) definition of any one-time or periodic special applications (line pigging, special chemical "slug," etc .) designed to reduce the overall costs of odor and corrosion control by conditioning the collection system to require lower dosages of the chemical products continuously in use; (4) supply, install, and maintain vapor reaction chambers chemical storage tanks, chemical and vapor transfer equipment, controls, piping, valving, and other appurtenances; (5) supply chemicals to these storage tanks and vapor reaction chambers as required for odor and corrosion control; (6) provide technical services as required herein to assist CITY to operate and maintain chemical treatment equipment and appurtenances, monitor and adjust feed rates to optimize cost-effectiveness of its use, and schedule and arrange for chemical deliveries at each application site; and (7) maintain chemical feed equipment and appurtenances to include labor only when repairs or replacement becomes necessary. The City will pay for parts separately, either by obtaining parts through normal business or requesting the OCCP CONTRACTOR to obtain the required parts and billing the CITY.

Based upon extensive experience or comprehensive, conclusive field trials/ demonstrations specific to the CITY's Odor Corrosion and Control Program, the liquid chemicals permitted to be used on a continuous basis under this contract include liquid hydrogen peroxide, calcium nitrate (Bioxide®), and magnesium hydroxide (Thioguard®). Changes in the chemical or combination of chemicals used at the applicable sites may be made only with CITY approval. The use of ferrous chloride or ferric chloride will not be permitted without the specific written approval of the CITY. The liquid phase treatment chemicals shall be pumped into the collection system, either at a pumping station or directly into a force main, from each site at a controlled rate which is monitored and adjusted as often as necessary in order to maintain odor and corrosion control at all times of the day, during weekends, and during change of seasons. Individual and shared facilities and responsibilities exist among the City, the District, and the Town. Dosages applied shall be maintained and optimized to the contracted standards of performance within each jurisdiction and as wastewater passes from jurisdiction to jurisdiction.

Deleted: potassium permanganate

Deleted: , and ¶ granular activated carbon (GAC).

Deleted: ¶

Deleted: ¶ ¶

Deleted: .

Pump station vapor emissions shall be collected and pumped through vapor reaction chambers containing granular activated carbon (GAC), monitoring and adjusting flow rate and chemical media activity/exhaustion/replacement as often as necessary in order to maintain odor and corrosion controls at all times of the day, during weekends, and during change of seasons.

2.3 Definitions

The following terms as used in this agreement shall have the following meanings:

2.3.1 "Application site" shall be a location owned and operated by CITY, the Town of Wrightsville Beach, or the New Hanover County Water and Sewer District where vapor reaction chambers, chemical storage tanks, chemical and vapor transfer equipment, piping and other appurtenances are provided by the OCCP CONTRACTOR to provide chemical treatment for odor and corrosion control.

Application sites may be existing, in-use, and suitable (location, equipment, dosed chemicals, mechanism of exerting control) for effective dosing of some chemicals or may not be suitable for effective dosing of other chemicals, necessitating identification and/or acquisition of new dosing sites and/or installing new equipment. Determinations of this type may be necessary at contract initiation or from time to time throughout the contract. Such determination, together with conclusive supporting justification, shall be brought to the City's attention for its decision on implementation.

2.3.2 "CITY" shall be the City of Wilmington, North Carolina in its responsible role as the administrative agent in this contract representing the interests of the City of Wilmington, Town of Wrightsville Beach, and the New Hanover County Water & Sewer District. Each of these three governmental corporations either own, have interest of title in, or regulate some portion of the total system under control described in this contract. The City of Wilmington shall be responsible to the OCCP CONTRACTOR for coordinating those responsibilities among the three governmental corporations as they are assigned to the CITY under this contract. Due to the multiple jurisdictions involved, the OCCP CONTRACTOR shall manage dosages so as to maintain control, and optimize performance within each of the respective jurisdictions; that is, minimize any carryover effects between jurisdictions unless such carryover is unavoidable or desirable and suitable institutional responsibilities for control and costs can be identified, agreed to by all parties, and implemented.

2.3.3 "Control segment" shall be the defined length which is a subset of the total system under control. For liquid treatment, it is defined as starting at the point where chemical from an application site contacts the wastewater stream to a point in the pipeline direction toward the treatment plant defined as either of the following: (1) the next point downstream where chemical from another application site contacts the wastewater; or (2) the effluent overflowing from the primary clarifiers at either the Northside or Southside Treatment Plant. For vapor treatment, it is defined as the point(s) at a location where untreated system emissions are collected, and conveyed to, through, and from chemical treatment equipment. A control segment shall be defined for each application site in the downstream (toward the receiving treatment plant or atmospheric emission) direction from that site.

2.3.4 "Date of service initiation" shall refer to the date that chemical product is first applied to begin the control of odor and corrosion specified in this agreement. On this date all equipment not previously installed shall be fully installed and operational at all application sites, and the initial chemical product deliveries completed to each storage tank or reaction chamber.

2.3.5 "District" shall refer to the New Hanover County Water and Sewer District, a governmental corporation whose interests and responsibilities under this contract are being administered through the CITY.

2.3.6 "Odor and corrosion control" shall be defined as a performance requirement of the OCCP CONTRACTOR at any point along the total system under control. Depending upon specific treatment chemicals utilized and their corresponding principles/mechanisms of operation, performance shall be determined separately for each control segment based upon sampling at any location within the defined control segment, with sampling results defining compliance with performance requirements when, as applicable, the following conditions are met: (1) maximum dissolved hydrogen sulfide concentration in the wastewater of 0.75 mg/l at any point along the control segment; (2) maximum airborne hydrogen sulfide concentration of 3.0 mg/l at the PS 34 grit chamber; (3)maximum dissolved hydrogen sulfide concentration of less than 0.75 mg/L at permissible sample points along a control segment except specific locations stated in (2) above; (4) maximum airborne hydrogen sulfide concentration of 3.0 mg/l at any public interface locations such as manhole covers and treatment plant or pump station fence lines or property lines along control segments where the public has access to CITY wastewater facilities;(5) product residual at the end of each control segment of less then 10% of the concentration initially fed at the application site; (6) maximum head space hydrogen sulfide concentration of 17 mg/l at any point along the control segment, headspace being defined as any essentially enclosed or confined atmosphere above the wastewater within the collection system; (7) maintaining the wastewater pH between a range of 7.8 and 9.0 at any point along the control segment; (8) compliance with NCDENR Air Permit Nos. 5778 R4 AND 5779 R4; (9) other airborne contaminants exceeding applicable duly established regulatory limits; and (10) loss of any materials of construction through wastewater-induced corrosive action exceeding 20% of its original manufactured dimensions(20% total corrosion allowance life cycle; 1% average corrosion allowance annually) or as otherwise established by its manufacturer or other applicable code or requirement, as measured upon the actual component or coupon intended to afford comparable information on material degradation, no loss in function or other induced material failure, such as, for example, wiring material, connections, and insulation, either broad/general or localized, caused by constituents associated with wastewater either dissolved within or imparted to the immediate atmosphere at any CITY facility or component within associated with the system under control.

Deleted: the PS 34 grit chamber

Deleted: .

Deleted: 20

Deleted: 8.2

2.3.7 "Supplier(s)" shall be defined as the firm(s) who manufacture(s) and distribute(s) the chemical product(s) used under services of this agreement. The Supplier(s) may be the same firm as the OCCP CONTRACTOR or may be a firm to which the OCCP CONTRACTOR has obligated by contractual arrangement to deliver chemical product(s)

for services of this agreement.

2.3.8 "Total system under control" shall include the total extent of the CITY's wastewater collection system to which odor and corrosion control shall be applied under this contract. This total system is defined to specifically include the following: (1) 14" Wrightsville Beach Interceptor (approximately 17,600 linear feet) from Town Lift Station #1(WB1) to Bradley Creek Pump Station (COW 35); (2) 20" Northeast Interceptor and 21" Gravity Outfall (approximately 16,500 linear feet) from Bradley Creek Pump Station (COW 35) to Hewletts Creek Pump Station (COW 34); (3) 24" Northeast Interceptor (approximately 32,500 linear feet) from Hewletts Creek Pump Station (COW 34) to Southside Wastewater Treatment Plant (COW SSWWTP); (4) 24" River Road Interceptor, approximately 6000 linear feet, from a dosing site at former COW 17 to COW Southside Wastewater Treatment Plant; (5) 10" New Hanover County/Cape Fear Utilities force main, approximately 1,430 linear feet, from interconnection with County Shamrock Pump Station (NHC 35) to Hewletts Creek Pump Station (COW 34); (6) 30" Northside Force Main (approximately 5,100 linear feet) from Smiths Creek Pump Station (COW 10) to Northside Wastewater Treatment Plant (COW NSWWTP); (7) 18" Barnards Creek Forcemain, approximately 4,382 linear feet, from County Barnard Creek Lift Station (NHC 76) to the Southside Wastewater Treatment Plant (COW SSWWTP); (8) 16" Westwood Forcemain, approximately 16,410 linear feet, from County Westwood Lift Station (NHC 77) to Bradley Creek Pump Station (COW 35); (9) 12" Echo Farms Forcemain, approximately 7,440 linear feet, from the junction of City Echo Farms Pump Station 2 (COW 27) and City Independence West Pump Station (COW 36) to the Southside Wastewater Treatment Plant (COW SSWWTP); (10) 24" Ogden Interceptor forcemain approximately 12,400 linear feet, from County Smith Creek Pump Station (NHC 89) to the Northside Wastewater Treatment Plant (COW NSWWTP); (11) 12" Motts Creek Interceptor, approximately 14,190 linear feet, and 10" forcemain, approximately 110 linear feet from County Mott Creek Lift Station (NHC 69) to its junction with Barnards Creek Lift Station (NHC 76); (12) 30" Ogden Interceptor extension approximately 1,156 LF from a dosing site (DS-OP) adjacent to NHC Ogden Park to County Westwood Lift Station (NHC-77); (13) within or emanating from the open channels and wet wells of all intermediate on line pump or lift stations interconnecting these systems; (14) within or emanating from the influent channels piping, and structures of both wastewater treatment plants (COW NSWWTP and COW SSWWTP) to the point where wastewater is discharged over the effluent weirs of the primary clarifiers. The total system under control represents the sum total of all defined control segments. The pipelines and integral pump/lift stations on the schematic diagrams in Appendix A, plus the areas of the two treatment plants from the headworks to the grit chamber effluent weirs, represent the defined total system under control.

Deleted:

2.3.9 "Town" shall refer to the Town of Wrightsville Beach, a governmental corporation whose interests and responsibilities under this contract are administered through the CITY.

2.4 Qualifications of OCCP CONTRACTOR

Qualifications of the OCCP CONTRACTOR are divided into categories of technical services and chemical product supply.

2.4.1 Technical Services

The OCCP CONTRACTOR shall have among the OCCP CONTRACTOR'S own staff technical personnel fully knowledgeable of the operation, maintenance, and repair of the equipment used and understanding of the process of treating using each specific chemical product proposed to be used for odor and corrosion control as part of this agreement. The OCCP CONTRACTOR shall provide a list of such staff technical personnel with their address and telephone number(s) to the CITY. Technical personnel shall be thoroughly familiar with safety and emergency procedures for each of the chemical products used. Such technical personnel shall also be fully knowledgeable of proper sampling techniques and reliable testing methods for use in determining concentrations of odor and corrosion-producing contaminants and residual of the chemical(s) used, quality control checking of the test results, and interpretation of test results to optimize chemical usage.

2.4.2 Chemical Product Supply

The OCCP CONTRACTOR may also be the Supplier, or shall have under contract a Supplier for each chemical product used under this agreement for odor and corrosion control. The Supplier shall have at least two separate sources/suppliers from which product can be shipped for each different chemical product furnished. The OCCP CONTRACTOR may also meet this condition by contracting with more than one Supplier, each with one warehouse, for the same product. The use of more than one Supplier shall not relieve the OCCP CONTRACTOR of any responsibilities under this agreement for the quality and purity of product delivered. The OCCP CONTRACTOR shall provide a list of each supplier with their contact person, address and telephone number(s)to the CITY.

2.5 Chemical Product Requirements

All chemical product delivered to any application sites under this Agreement shall meet all conditions specified as follows:

2.5.1 Liquid hydrogen peroxide: Liquid hydrogen peroxide solution shall be a 50% technical grade with the following properties: (1) a minimum 50% but not greater than 52% hydrogen peroxide by weight: (2) Specific Gravity approximately 1.196; (3) pH between 2.0 and 4.0 S.U. (4) Boiling Point of solution= 237 °F and Freezing Point= -62 °F; (5) Free Acid less than 0.006% by weight; and (6) Residue (chemical constituents other than hydrogen peroxide and water) less than 0.06% by weight.

2.5.2 Liquid Calcium Nitrate: Liquid calcium nitrate also known commercially as Bioxide®, shall be an aqueous solution of calcium nitrate containing a minimum of 3.5 pounds of nitrate-oxygen per gallon and a minimum specific gravity of 1.45. It shall contain no hazardous substances as listed in 40 CFR 302 and shall be non-DOT regulated. The liquid calcium nitrate shall have the following properties:

Appearance & Odor: Clear or light brown solution
Vapor Pressure: 20

Deleted: deg
Deleted: degF
Deleted:
Deleted:
Formatted: Indent: Left: 0.42"
Deleted: Potassium permanganate:
Deleted: Potassium permanganate
Deleted: fully ¶ comply with
Formatted: Indent: First line: 0.42"

Vapor Density (Air=1): 0.03
Boiling Point: (of solution) 220°F
Melting Point: Not applicable
Specific Gravity: at 20°C, 1.45
Solubility in Water: Complete
Volatile Percentage: (water) 40
pH: 5.5-7.5

2.5.3 Liquid magnesium hydroxide: Liquid magnesium hydroxide also known commercially as Thioguard®, shall be a stabilized aqueous suspension of magnesium hydroxide at nominal concentration of 63% solids by weight with the following properties: (1) a minimum of 60% but not greater than 65% magnesium hydroxide solids by weight; (2) a minimum of 91.5% and nominally 92.5% MgO; (3) other constituents 7.5%; (4) viscosity nominally 350 cp with a minimum of 200 cp but not greater then 800 cp. (5) freeze point 32°F.

2.5.4 The OCCP CONTRACTOR shall make every effort to maintain consistency of active ingredients within the chemical products so as to provide a consistent basis for adjusting liquid feed rates at the metering pump to the conditions necessary for odor and corrosion control and avoid underfeeding or overfeeding based on differences in concentrations from different deliveries. Changes in the chemical or combination of chemicals used at the application sites may be made only with the CITY's approval.

All conditions limiting residue and impurities in the standards referenced above shall be rigorously complied with. The OCCP CONTRACTOR shall continuously attempt to obtain the highest quality of product economically available. As a minimum, the following maximum allowable dosages of heavy metals shall be complied with throughout the contract period. For chemical(s) exceeding the maximum concentration quantities below, the OCCP CONTRACTOR shall follow steps outlined in Paragraph **"2.10 Piping and Appurtenances."** For granular deliveries the concentrations on heavy metals in the granular materials shall be converted on the basis of a liquid solution defined as the minimum concentration by the applicable AWWA standard.

If under this Agreement sampling results identify noncompliance with any of the minimum standards immediately below, the OCCP CONTRACTOR shall have fourteen (14) days after first becoming aware of the noncompliance to make changes to achieve compliance and to furnish sampling and sample results confirming compliance (sampling and testing to confirm compliance will be at no expense to the CITY) along with a letter to the CITY explaining corrective steps taken. If noncompliance may detrimentally impact the force main wastewater collection systems as defined herein, or exceeds fourteen days, or if the same noncompliance should subsequently recur, the CITY may terminate this Agreement with cause under the conditions of Section 9.

Deleted: the requirements of American Water Works Association ¶ . Standard B603-88. An affidavit of compliance with the AWWA ¶ . specification shall be supplied with each delivery as well as the ¶ . total weight of pure potassium permanganate in the delivery, pH, ¶ and gallons determined by a certified analysis prior to shipment. If the OCCP CONTRACTOR chooses to ship potassium permanganate to the site in granular form, the OCCP CONTRACTOR shall furnish all equipment and labor required to dissolve and mix the product into solution such that each separate solution is of a consistent concentration as defined below.

Deleted: .

Deleted: s

Deleted: ¶

Deleted: suspensioin

Deleted: t

Deleted: F

MAXIMUM ALLOWABLE DOSAGES UNDER THIS CONTRACT

	MAXIMUM APPLIED CONCENTRATION CHEMICAL SOLUTION (per delivery) -(mg/l)-	SOUTHSIDE PLANT ADDITIONS (consecutive 24 hrs) -(lbs/day)-	NORTHSIDE PLANT ADDITIONS (consecutive 24 hrs) -(lbs/day)-
Cadmium	0.003	0.675	0.377
Chromium	0.002	0.06	0.08
Copper	0.041	1.00	1.00
Lead	0.049	0.43	1.30
Mercury	0.0003	0.01439	0.0742
Nickel	0.021	0.22	0.62
Zinc	0.165	0.86	1.00
Iron	2.900	177.0	313.30
pH	5.0 - 10.0 standard units (S.U.)		

2.5.5 Granular Activated Carbon

Based upon recent experience and testing performed, high temperature steam activated, chemical impregnated bituminous coal-based Barnebey Sutcliffe ST 1-X GAC, or equal has been recommended for continued use for broad spectrum control of hydrogen sulfide, lower mercaptans, and other malodorus compounds. Projected minimum service life shall be one (1) year. Its predominately macroporous structure prevents pore blockage, resulting in elemental sulfur loading capacity exceeding 30% wt and organic loading loading of 20-40% wt.

Deleted:

Reaction chamber configuration shall be designed for the following contact time and flow rate relationships:

Bed height: 1-3 ft.
Contact time: 0.6-1.8 sec.
Face Velocity: 100 ft/min

Deleted:

Uniform pellet diameter shall produce a pressure drop not to exceed 4.5" H2O/ft bed depth. The OCCP CONTRACTOR shall maintain relative humidity between 10-50% to attain efficient sulfur compound oxidation and maximum sulfur loading capacity.

Representative product specifications follow:

SPECIFICATIONS

KI content	(w/w%)	min.	2
Moisture (as packed) (ASTM D-2887)	(w/w%)	max.	4

GENERAL CHARACTERISTICS

Apparent density (ASTM D-2854)	(g/cc)	0.56 min
H2S capacity (ASTM D-6646)	(gH2S/ccGAC)	0.09 min
Butane activity	(w/w%)	15.6 min
Total ash content (ASTM D-2866)	(w/w%)	7 max
Mean particle diameter (ASTM D-2882)	(mm)	3.7
Hardness no. (ASTM D-3802)	(w/w%)	97 min
Pressure drop, dense packed at 50 ft/min	("H2O/ft)	2.0
Percent on 4 mess U.S. Sieve	%	15 max
Percent on 7 mesh U.S. Sieve	%	8 max

2.6 Application Sites

Typical application site equipment shall include: feed pumps (minimum 2 units per site, 1 unit capable of handling maximum feed requirements and 1 unit serving as redundant standby/backup) piping, valving, controls, power supply, hardware, supports, accessories, fence, secondary containment, SCADA system interconnection.

Locations currently serving as application sites and which can be furnished for use as application sites are listed below:

Site No.	Application Site	Locations Available for Chemical Discharge Piping from Site to Wastewater Flow and Vapor Chemical Treatment for Atmospheric Emission
1	Town Lift Station #1 (WB1)	Liquid chemical treatment connection to 3/8" stainless steel tubing available at lift station site which doses approximately 1000 feet upstream.
2	Town Lift Station #5 (WB5)	Liquid chemical treatment connection to 1" PVC schedule 80 pipe available at lift station site. Pipe is already connected to a tap on 14" force main.
3	City/District Bradley Creek Pump Station #35 (COW 35)	(A) Liquid chemical treatment connection to 3/8" stainless steel tubing available at lift station which doses into exit force main. (B) 980 cu ft. total volume vapor reaction chambers.
4	District Alfords Lift Station #43 (NHC 43)	Liquid chemical treatment connection to 3/8" stainless steel tubing available at lift station site. Pipe is already connected to a tap on 20" joint use (Northeast Interceptor) force main.

5	City/District Hewletts Creek Pump Station #34 (COW 34)	**(A)** Liquid chemical treatment free flow into open channel ahead of station wet well; or (B) liquid chemical treatment tap on 24" force main within station site outside building will be permitted if equipment, labor, and materials for tap by OCCP CONTRACTOR at no added cost to City. (C) 490 cu ft total volume vapor reaction chamber.
6	Former City Pump Station #17 (COW 17)	Liquid chemical treatment connection to 1/2" SS pipe tapped on 24" force main. Forcemain is in right-of-way adjacent to station site on opposite side of roadway.
7	City Independence Blvd. West Pump Station #36(COW 36)	(A) Liquid chemical treatment connection to 1/2" PVC schedule 80 pipe available at pump station site. Pipe is already connected to a tap on 24" Northeast Intercepter forcemain.
8	City Independence Blvd. West Pump Station #36 (COW 36)	(B) Liquid chemical treatment connection into 12" Echo Farms Forcemain.
9	City Smith Creek Pump Station #10 (COW 10)	Liquid chemical treatment free flow into open channel ahead of wet well.
10	District Barnards Creek Lift Station 76 (NHC 76)	Liquid chemical treatment free flow into wet well.
11	District Westwood Dr. Lift Station 77 (NHC 77)	Liquid chemical treatment free flow into wet well.
12	District Shamrock Pump Station #35 (NHC 35)	Liquid chemical treatment connection to ½" SS pipe tapped on 10" Cape Fear Utilities force main. Force main is in right-of-way adjacent to station site on opposite side of roadway.
13.	District Smith Creek Pump Station 89 (NHC 89)	Liquid chemical treatment dosed into wetwell.

14	District Motts Creek Pump Station 69 (NHC 69)	Liquid chemical treatment dosed into wetwell.
15	District Ogden Park Dosing Station (NHC OPDS)	Liquid chemical treatment dosed into gravity collection system.
16	SSWWTP	Liquid chemical treatment free flow into wet well.

A schematic showing the layout of the force mains in the collection system which are to be protected against odor and corrosion under this contract and the relative location of the available application sites and a plan of the wastewater service area showing more specifically the location of the above sites and the treatment plants are included within this agreement as Appendices A and B. Application sites may be added and/or deleted, with CITY approval, during the contract period subject to the terms of this Agreement.

Deleted:

If the OCCP CONTRACTOR chooses, with the CITY's approval, an option to furnish piping and a tap for chemical injection to a force main at a location outside of the property boundaries of the station, the OCCP CONTRACTOR shall obtain all permits, easement and/or encroachment agreements, provide or contract for all equipment, materials, and labor necessary for the work, and shall restore all rights-of-way or adjacent property to preexisting conditions after construction is complete. The OCCP CONTRACTOR shall abide by all conditions of any encroachment or easement agreements required. The OCCP CONTRACTOR shall hold the CITY harmless from any claims whatsoever resulting from such work in rights-of-way or property outside the limits of the pump station site, unless such claims arise from the negligence or willful conduct of the CITY, Town, or County and their employees and agencies.

The OCCP CONTRACTOR shall submit a plan to the CITY for review and approval of all construction work proposed within a pump station site. The CITY will approve plans which are reasonable and conform to other access needs and other pump station operations. However, the CITY reserves the right to reject specific proposals which may interfere with other pump station operations and may limit the time allowed for access to pump station equipment or operations to be restricted or reject proposals which restrict access to critical areas of the pump station which must continually remain open. The OCCP CONTRACTOR shall use proper construction techniques in performing such work and take care not to damage any other pump station facilities or utility lines. Any damage resulting from such operations shall be repaired to the satisfaction of the CITY at no additional cost. Areas of asphalt paving, grass or shrubbery disturbed by construction shall be restored upon completion of work. Appropriate sediment and erosion control measures shall be taken during and after the work until no longer necessary, and permits shall be obtained for such measures when required. Application sites other than those listed above are acceptable provided that the OCCP CONTRACTOR secures legal rights to the site, provided barbed-wire fencing or an equivalent means to secure the site against unauthorized entry, and develops the site in a manner conforming to all State, Federal, and local laws and regulations, and all deed or easement restrictions. The OCCP CONTRACTOR shall hold the CITY harmless from any claims whatsoever resulting from the use of alternative sites secured by the OCCP CONTRACTOR, unless such claims arise from the negligence or willful conduct of the CITY, TOWN, or District

and their employees and agencies.

2.7 Fluid Transfer

2.7.1 Liquid Treatment: Chemical feed pumps.

The CONTRACTOR shall provide chemical feed pumps as defined below at each existing application site. The chemical feed pumps shall be of the positive displacement (Peristaltic type) pumps and shall be capable of accurately metering a specific flow rate based on a setting by the operator and shall be capable of maintaining the same flow rate until the setting is again adjusted regardless of the product level in the storage tank. The pumping rate shall be infinitely adjustable within the pump's capacity range. The pumps shall remain primed after placed into operation within the full variance in liquid level permitted in the storage tank between chemical deliveries.

Deleted: CITY

Deleted: ¶

The specific chemical feed pump models shall be determined by the OCCP CONTRACTOR to provide a match between the accurate metered capacity range of the pumps at each application site and the anticipated ranges of chemical feed necessary for compliance throughout the year with odor and corrosion control provisions of this contract. A minimum of three pumps shall be supplied at each application site, of which at least two shall have an accurate metering range capable of pumping the minimum constant daily rate of chemical required. Two units shall be installed for each dosing point, with the third unit stored at a bonded warehouse as a dedicated spare. One unit shall handle all service requirements and one unit shall serve as standby. The third pump may be of equal size to the other two, or may have a smaller range for use in combination with one of the other two large pumps during periods of the day when peak chemical dosing is required.

The range of each pump shall be suitable for accurately metering desired flows for both winter and summer odor and corrosion control; if the pump's accurate metering range cannot achieve this standard the OCCP CONTRACTOR shall change out pump sizes as often as necessary (but maintaining three pumps for each application site at all times). Material costs associated with equipment replacement needed to continue achieving contract performance standards under changing process conditions shall be borne by the OCCP CONTRACTOR; material costs as associated with equipment replacement necessitated by its malfunction or failure from normal wear and tear while receiving attentive/deliberate maintenance attention shall be borne by the CITY.

Deleted:

Deleted: ¶
¶

The chemical feed pumps at each application site shall provide an adequate discharge pressure to overcome friction losses in the chemical discharge piping and to overcome the maximum anticipated force main pressure at the point of application. The maximum anticipated force main pressures at each of the eleven potential application sites listed in Subsection 2.6 is provided in the table below (head is in reference to the force main invert elevation at the local site):

Deleted:

Application Site	Total Dynamic Head (feet)
Town Lift Station #1	0
Town Lift Station #5	70
City/District Bradley Creek Pump Station #35	0
District Lift Station #43	35
City/District Hewletts Creek Pump Station #34	

Open Channel	0
Force Main Discharge	125
City Pump Station #36	60 (A)____(B)
Former City Pump Station #17	50
District Lift Station #76	0
District Lift Station #77	0
City Pump Station #10	0
District Lift Station #35	15
District Lift Station #89	0
District Lift Station #69	0
District Ogden Park Dosing Station	0

The parts of the Chemical Feed Pumps in contact with the chemical product(s) shall be durable and of proper materials resistant to chemical attack and designed such that the chemical being pumped is totally isolated and sealed from the drive units of the pump. The pumps furnished shall include all accessories required by, the pump manufacturer for the specific chemical being pumped. The pumping units shall be adequately anchored to prevent movement.

Deleted: attack,

The CONTRACTOR shall provide equipment at all sites identified herein. The OCCP CONTRACTOR has reviewed the sites and equipment and agrees that the equipment is fit and suited for the intended purpose. The OCCP CONTRACTOR shall notify the CITY immediately should the equipment fail in any manner.

Deleted: CITY

Deleted: will

2.7.2 Vapor Treatment Fans

Vapor control technology shall, as a minimum, correspond with existing Calgon Carbon Corporation technology, as may be recommended for renewal or replacement by the OCCP CONTRACTOR in recognition of improved technologies or adaptations to suit this project's conditions. These recommendations, including but not limited to complete technical details and costs (capital and O & M) shall be submitted to the CITY for approval prior to implementation. Vapor treatment system components have been sized for 4,500 cfm capacity or as otherwise needed to provide 12 air changes per hour for the entire connected volume for treatment; should project conditions dictate otherwise, the OCCP CONTRACTOR shall offer a system designed for those conditions.

Appropriate fans shall be supplied by the CONTRACTOR; one at each pump station. Each fan shall be of the centrifugal, belt-driven type construction, corrosion resistant fiberglass reinforced plastic. Fan shall be suitable for continuous 24-hour operation. Each fan shall operate such that no point on the fan curve requires more than the nameplate motor horsepower furnished. Minimum fan capacity shall be 4,500 cfm at 10" WC or as required for the specific service location. The fan housing and flanges shall be constructed of an FRP laminate consisting of an appropriate ultraviolet resistant and fire-retardant resin and the proper fiberglass or synthetic reinforcement capable of resisting continuous fume temperatures of 200°F. The fan manufacturer shall state the type of resin used and confirm that it will perform satisfactorily under the chemical operating conditions as specified herein. All interior surfaces exposed to the hydrogen sulfide gas shall be resin rich. Wheel and shaft assemblies shall be statically and dynamically balanced to a maximum of 3 mils displacement prior to fan assembly, in accordance with the standard test code for air moving devices and the assembled fan shall be tested prior to shipment. Fan mechanical run test data shall be submitted prior to shipping the fan. The fan shall be furnished with the following standard features:

Deleted: are

Deleted: to

Deleted:

Deleted:

1. Wheel: Multi-piece fiberglass construction bonded together With resin and fiberglass material.
2. Drive Assembly: Belts shall be oil, heat, and static resistant type, oversized for continuous duty. Shafts shall be turned, ground, and polished.
3. Bearings: Heavy duty, pillow block bearings with grease fittings.
4. Shafts: Constructed of heavy duty Type 316 stainless steel and provided with a sleeve constructed of fiberglass reinforced plastic.
5. Shaft seal: A fiberglass Neoprene shaft seal shall be installed where the shaft leaves the housing. The fan shall also be equipped with a Neoprene shaft slinger between the seal and wheel on belt drive units.
6. Base: Heavy gauge hot rolled steel, epoxy coated.

The fan shall also be furnished with the following accessories:

1. Flanged outlet, flanged or sprocket inlet
2. Drain
3. Access door
4. Vibration isolation system
5. Approved OSHA belt and shaft guard
6. Grounding per ASTM 04167

The fan shall have a single winding, explosion proof 1.15 service factor, TEFC, high efficiency, 480V, 3 phase, 60 Hz motor. Fan shall be provided with isolation tray.

Further, if having been determined that efficient vapor moisture content control is critical to effective vapor chemical treatment, the OCCP CONTRACTOR shall likewise submit its moisture control recommendations, including but not limited to complete technical details and costs (capital and O & M) to the CITY prior to implementing any installation or media replacement.

2.8 Chemical Treatment Controls

2.8.1. Liquid treatment

The CONTRACTOR shall provide the chemical feed controls as defined herein. The CITY shall provide a maximum power supply of 480 volt, 60 Hz, three single phase through a 15 amp breaker terminating with a fused disconnect local to the OCCP equipment at a location to be determined by the CITY and OCCP CONTRACTOR. Alternatively, if desired, the CITY will provide either 120 v or 240 v power supply as directed by the OCCP CONTRACTOR. Beyond the CITY providing the basic power supply, the OCCP CONTRACTOR shall be responsible for any required transformer(s) to make additional power supplies available to any/all remaining OCCP system components. All such work will be performed by properly credentialed trades/contractors. Pump motor and controls shall be suitable for use in outdoor and corrosive environments. The CONTRACTOR shall also furnish all controls for the pumps, furnished either as a part of each pump assembly or mounted immediately beside the pumping units within a separate

Deleted: CITY

Deleted: will

Deleted: below

Deleted: CITY

free standing enclosure. Each pump shall be operated by a three-position switch dedicated to that individual pump as follows: (1) "OFF" position, in which source voltage is continuously disconnected from the pump motor; (2) "HAND" position, in which the pump will operate continuously as long as the switch is in this position; and (3) "AUTO" position, in which pump operation is controlled either by a 96 position 24-hour time clock, graduated in 15-minute increments, of which each increment can be set as "OFF" or "ON" independently of all other increments, by interlock with process equipment, or by process instrument pacing. Control wiring for the "AUTO" circuit shall also be wired to a terminal strip in series with the time clock for potential future interlock with a control relay at a remote location.

A UL approved power cord for outdoor use with a plug for receiving a 480 volt weatherproof quick connect receptacle shall extend from the control panel for receiving power supply. The cord shall be of sufficient length to reach an outdoor receptacle up to 100 feet from the location of the equipment and shall be secured in conduit buried to the extent practicable to prevent tripping or similar hazards. All electrical wiring and control equipment shall be UL approved. lid separate control panel is furnished, it shall be suitably anchored and braced.

Deleted:

The OCCP CONTRACTOR has examined the existing chemical feed controls and agrees that they are fit for the intended purpose.

2.8.2 Vapor Treatment

Vapor control technology shall, as a minimum, correspond with existing Calgon Carbon Corporation technology, as may be recommended for renewal or replacement by the OCCP CONTRACTOR in recognition of improved technologies or adaptations to suit this project's conditions. These recommendations, including but not limited to complete technical details and costs (capital and O & M) shall be submitted to the CITY for approval prior to implementation.

Further, if having been determined that efficient vapor moisture content control is critical to effective vapor chemical treatment, the OCCP CONTRACTOR shall likewise submit its moisture control recommendations, including but not limited to complete technical details and costs (capital and O & M) to the CITY prior to implementing any installation or media replacement.

2.9 Chemical Storage Tanks

2.9.1 Liquid Treatment

The CITY shall provide the chemical storage tanks as defined below. The OCCP CONTRACTOR may elect to provide chemical storage tanks at each application site. The cost for OCCP CONTRACTOR supplied tanks is included in the costs referenced herein. The tanks shall be seamless or of continuously welded seams and shall be watertight. Depending upon the specific chemical being stored, acceptable materials include stainless steel, aluminum, high density cross-linked polyethylene or polyolefin or FRP, provided, however, that the material is of sufficient quality or purity to prevent reaction with the chemical being stored and of sufficient structural integrity to withstand the weight of the stored chemical when full without undue stress. The formulation of its materials of construction shall include stabilizers to enhance its properties and longevity with installation in an exterior environment. The tanks shall be placed above ground on a flat

Deleted:

surface, and shall contain hold-down lugs if necessary for stability when the tank is nearly empty. The capacity of each tank shall be determined by the OCCP CONTRACTOR and shall be sufficient to maintain chemical feed rates required for adequate hydrogen sulfide control between chemical deliveries.

Each tank shall include a threaded manway with suitable gasket to prevent leaking, shall be adequately vented to atmosphere through an integral floating vent cap and shall contain a fill line from the top of the tank and a combination drain line and pump suction line the tank bottom. In addition, delivery of hydrogen peroxide shall incorporate provision to introduce nitrogen for the purpose of purging any product remaining in the transfer line from the delivery truck to the storage tank. Chemical storage tanks shall not exceed ten (10) feet in diameter. Tanks installed at Town Lift Station #5, District Lift Station #43, shall not exceed eight (8) feet in height, and at other potential application sites made available by the CITY shall not exceed sixteen (16) feet in height.

If the chemical utilized requires regular mixing to prevent separation or stratification, the OCCP CONTRACTOR shall provide permanently installed mixing equipment to maintain storage tank inventory in a uniform consistency. This mixing equipment shall be independently mounted upon its own separate structural support; tank mounting of mixing equipment is not acceptable.

If the OCCP CONTRACTOR chooses to have dry granular chemical product delivered to application sites, the OCCP CONTRACTOR shall furnish all equipment and labor to store the granular product and to mix the granular product into solution with a very consistent concentration of the active constituent in each solution made- up. Attention required to monitor or maintain this equipment shall be by the OCCP CONTRACTOR. Equipment which requires attention from CITY personnel will not be acceptable.

The OCCP CONTRACTOR has examined the existing chemical storage tanks and agrees that they are fit for the intended purpose.

2.9.2 Vapor Treatment

Vapor control technology shall, at a minimum, correspond with existing Calgon Carbon Corporation technology, as may be recommended for renewal or replacement by the OCCP CONTRACTOR in recognition of improved technologies or adaptations to suit this project's conditions. These recommendations, including but not limited to complete technical details and costs (capital and O & M) shall be submitted to the CITY for approval prior to implementation.

Deleted: s

Vapor Reaction Chamber

Deleted: ¶
¶
¶
¶
¶
¶
¶
¶
¶
¶
¶
¶

The fiberglass reinforced polyester (FRP) vessel shall be fabricated in accordance with the American Society of Testing materials (ASTM) methods. They shall apply as follows:

1. ASTM 03299 - Fiberglass reinforced polyester chemical resistance.
2. ASTM 0833 -
3. ASTM 02583 -

Building Officials Code Administrators International (BOCA)

National Bureau of Standards (NBS)

1. NBS PS 15-69 relating to contact molded reinforced polyester chemical resistant process equipment.

Resin System

1. The resin utilized in the liner and the structure shall be a resin such as Hetron 922. Ashland Chemical Company or Atlac 580 (Koppers) or a similar resin manufactured by Dow Chemical.

2. The odor control manufacturer shall submit a certification for the resin stating that the resin is suitable for the intended service.

Fabrication

The following fabrication methods shall be strictly adhered to:

1. The resin and glass shall be applied to molds through the use of a low pressure airless delivery system to insure a uniform air-free laminate with proper resin-to-glass ratio as required for corrosive environments. Raw material deposition to molds shall be controlled by a programmable controller to ensure uniform glass-to-resin ratio.

2. Exothermic interruption shall be limited to four hours maximum between corrosion linear and structural layers.

3. All vessels shall meet or exceed requirements for acetone sensitivity.

4. All surface shall be prepared for full cure.

5. Filament fibers shall not be exposed.

6. The vessel shall be fabricated utilizing filament winding techniques. The corrosion liner shall be automatically fabricated using surface veil and resin system for maximum corrosion resistance. Reinforcement shall be commercial grade corrosion resistant borosilicate glass. Silane type surface finish and binder shall be compatible with the resin used. The inner corrosion layer shall not exceed 20%+/-5% glass by weight.

7. The inner corrosion barrier shall be followed by at least two layers of 1-1/2 oz. chopped strand mat or two passes of chopped roving to a total of 3 oz./sq.ft.

8. All edges of surface veils in wet layup shall be lapped a minimum of one inch. A separately cured unreinforced gel coat shall not be use.

9. Structural laminates shall contain not less than 55% or more than 65% glass by weight.

10. Manway covers shall be air tight at the pressure equal to or higher than the fan static pressure. The manway shall also be watertight.

Quality Assurance

The fabricator shall provide construction assurance documentation on each vessel. Information regarding material usage, Contract Document compliance, proper molding and applicable test data shall be maintained.

Testing

The following tests shall be performed on FRP samples from production:

1. Barcol Hardness
   Glass-to-resin ratio
   Burn test

2. Each vessel shall be filled with water to the overflow level and allowed to stand for 24 hours. No leaks will be permitted.

Single Bed FRP Carbon Absorber

Each carbon absorber shall be constructed of FRP. The vessel shall be fabricated in accordance with the standard codes listed under "references." The carbon absorber shall meet the following performance and dimensional criteria or other requirements consistent with other capacities or new applications/installations:

Deleted: ¶
¶
¶
¶

1. Capacity:	4,500 cfm
2. Diameter:	8 ft.
3. Overall Height:	10 ft.
4. Total Carbon Capacity	5,300 lbs.
5. Vessel Operating Weight	8,045 lbs. max.
6. Vessel Pressure Loss	10.0" max

The carbon absorber tower shall include flanged connections as specified below and as indicated on the Drawings:

SERVICE	QUANTITY	SIZE
Gas Inlet	1	18"
Gas Outlet	1	18"
Manway	2	32"
Overflow	1	2"

Drain	1	2"

Each carbon absorber shall include the following NPT threaded coupling or union connection, as shown below.

SERVICE	QUANTITY	SIZE
Pressure Taps	2	1/2"
Sample Ports	3	1-1/2"
Grounding Rod	1	3/8"
Air Sample Port	1 per inlet/outlet	1/2"

Each carbon absorber shall include anchorage and be designed to exceed the seismic requirements as specified in BOCA for all conditions. The odor control manufacturer shall submit calculations to the Engineer showing that the vessels and anchorage have been properly designed and include calculations that shall be signed and sealed by a Professional Engineer. Each absorber shall be furnished to accommodate a single bed of activated carbon having an average depth of three feet. The carbon bed shall be supported on a polypropylene screen through a support system. The screen and the grating used for the support system shall be removable through an access manway. The support system shall consist of removable grating, beams, and columns. Pall rings or other dumped packing media as a means of carbon support will not be acceptable. The support system shall be designed to withstand a load of at least 150 lbs./sq.ft. with a minimum deflection of 1/4" under all conditions. The odor control system manufacturer

shall submit calculations verifying compliance of the requirements. All calculations of the carbon support system shall be signed and sealed by a Professional Engineer.

CARBON ABSORBER VESSEL ACCESSORIES

Each carbon absorber vessel shall include the following accessories:

1. Manometer: A Dwyer Series 1230 or Series 2000 Magnehelic Gauge manometer, or equal, shall be provided to continuously monitor the pressure drop across the carbon bed.

2. Sample probes: Each vessel shall have three 1-1/2" diameter sample probes per bed which shall extend into the bed a minimum of twelve inches. The sample probes shall be adequate to provide suitable extraction of carbon samples from the carbon bed. The sample probes shall extend outside the vessel wall and shall be blocked off with a ball valve construction of PVC. A sampling tool for extraction of carbon sample shall be provided by the OCCP CONTRACTOR.

3. Grounding rod: A stainless steel rod shall be provided to adequately ground each carbon bed. Details in the form of past experiences or calculations demonstrating that the carbon bed will be adequately grounded shall be submitted to the Owner.

4. Carbon screen: A polypropylene sewn screen shall be provided to support the carbon.

5. Gaskets: 1/8" thick full face Neoprene.

6. Hardware: All hardware shall be Type 316 stainless steel.

7. Hold down: Type 316 stainless steel

8. Lifting lugs: Type 316 stainless steel

Further, if having been determined that efficient vapor moisture content control is critical to effective vapor chemical treatment, the OCCP CONTRACTOR shall likewise submit its moisture control recommendations, including but not limited to complete technical details and costs (capital and O & M) to the CITY prior to implementing any installation or media replacement.

2.10 Piping and Appurtenances

2.10.1 Liquid Treatment

The CITY shall provide the piping and appurtenances as defined below. All rigid suction and discharge piping, valves, fittings, and connectors shall be 316 stainless steel durable/resistant to external forces for withstanding anticipated line pressures and for chemical resistance. Where the chemical has a tendency to coat the interior pipe walls, flexible rubber hose may be used to terminate exposed discharge line within sewage chambers operating under atmospheric conditions in order to facilitate cleaning/de-blocking activities. Piping and joints shall be installed to prevent leaking under pump pressure and shall connect the suction line from the tank to the suction end of the

chemical feed pumps as well as connect the discharge end of the pumps to the appropriate discharge point. Ball valves and unions shall be provided on both suction and discharge piping near the pump to permit easy removal or replacement of the pump. A pressure gage appropriately calibrated for site conditions shall be mounted near the discharge side of the pump. and a backpressure valve provided with pressure set according to the pump manufacturer's recommendations. A branch line shall be connected to the suction piping between the suction ball valve and the pump's suction check valve with a normally closed ball valve and a vertically mounted graduated cylinder of capacity sufficient or comparable suitable temporary device for calibrating actual pump settings for the given site. Locations using chemical(s) exceeding the maximum concentrations per Paragraph **"2.5.3 Chemical(s) Allowances"** shall be provided with a water source and piping for dilution water to the chemical(s) being fed. Such carrier water shall be capable of diluting hydrogen peroxide, as delivered, to a concentration of less than 30% to 35% grade by weight measured at the point of injection. An emergency eye wash/shower station meeting OSHA requirements shall also be provided. Where readily available, a 3/4" water source with a RPZ backflow prevention device at 40 PSI pressure will be provided by the jurisdiction responsible for the site at each location specifically listed in Section 5. Water service for application sites furnished by the OCCP CONTRACTOR shall be provided by the OCCP CONTRACTOR.

With the exception of existing dosing lines located at Town Lift Station #1 and #5, all buried chemical piping shall be stainless steel encased in a second larger thermoplastic pipe to contain lost product and to facilitate product line replacement, with a sensing device between the two pipes to detect leakage from the inner pipe. The space between the pipes shall be sealed at both ends to prevent the entry of condensate which may result in a false alarm. An alarm light or similar signaling device shall be furnished to alert attending staff of a leaking condition. Failure of any single containment piping which results in product loss will be replaced in its entirety with a new secondary containment piping system.

The OCCP CONTRACTOR has examined the existing piping and appurtenances and, with the exceptions noted in the previous paragraphs, agrees that they are fit for the intended purpose.

2.10.2 Vapor Treatment

Vapor control technology shall, as a minimum, correspond with existing Calgon Carbon Corporation technology, as may be recommended for renewal or replacement by the OCCP CONTRACTOR in recognition of improved technologies or adaptations to suit this project's conditions. These recommendations, including but not limited to complete technical details and costs (capital and O & M) shall be submitted to the CITY for approval prior to implementation.

Ductwork

The odor control system manufacturer shall provide the necessary ductwork as follows:

1. Outlet ductwork between absorber and the termination above mechanical building roof.

2. Inlet ductwork between absorber and the fan.

3. Inlet ductwork between fan and the termination in the pump station wet well.

The FRP ductwork shall be fabricated using the hard layup or filament wound method in accordance with NBS PS 15-69, and meet ASTM 03299 requirements for filament wound duct. The ductwork shall be designed for at least 10" WC in accordance with NBS PS 15-69. The resin shall be a premium vinyl ester resin such as Hetron 922 as manufactured by Ashland Chemical, Derakane 411 as manufactured by Dow Chemical, or equal. A paraffin wax coating with U.V. inhibitor shall be applied on the outside. The inner corrosion barrier shall be followed by not less than two layers of 1-1/2 oz. chopped strand mat or two passes of chopped roving. The inner corrosion barrier plus the two mat layers shall be 100 mils minimum and be approximately 27% +/-5% by weight, per ASTM 02584. No Thixotropic agents shall be added. All hardware shall be stainless steel. Gaskets shall be 1/8" thick, full face, Neoprene suitable for the intended service. Any ductwork installed outdoors shall be U.V. stabilized. Elbows and tees shall be smooth-flow non-mitered. All factory connections shall be butt joint. All weld connections shall be bell-and-socket or flanged. All butt joints shall be reinforced with an overlay of glass fiber and resin to at least the thickness of the heaviest piece being joined. The ductwork shall be suitable for service in a saturated hydrogen sulfide atmosphere. Ductwork fittings (elbows) shall be sized and configured as required to meet space and clearance limitations shown on the drawings. Ductwork supports shall be fabricated from FRP or Type 316 stainless steel. Supports shall be designed to allow for expansion and contraction of the ductwork system. Connection to FRP duct shall be made by FRP or Type 316 stainless steel strap around duct. Attachment to FRP duct shall not compromise FRP integrity by screw, bolt, or other fasteners bearing directly on the FRP duct. Penetrations of ductwork through concrete shall be sealed watertight using methods and materials approved by the Owner. Furnish and install suitable transition pieces to connect ductwork to fan inlet and outlet.

Flexible Connectors

Flexible connectors shall be included with the ductwork to dampen axial and lateral vibrational duct movement.

Dampers

Furnish and install, in the duct between fan and absorber unit, a manual control damper meeting the following requirements:

1. The dampers shall be round FRP, flanged and drilled in accordance with NBS PS 15-69 standards. The damper shall be designed to withstand 15" WC pressure. The blade thickness

shall be as required by the damper manufacturer. Fiberglass axels shall extend full length of blade and six inches beyond frame. The unit shall be equipped with a full circumference blade seal, to limit leakage to less than 3 cfm/sq.ft. at 10" WC, and the shaft seal. Leakage test and performance data shall be submitted to Engineer by an Engineer-approved testing laboratory.

Testing Taps

At least three (3) air quality testing taps (2" Dia.) shall be installed in the duct work of each unit. One in the inlet duct and two in the discharge duct.

Grease Filter/Mist Eliminator

A grease filter/mist eliminator shall be furnished and installed. This unit shall consist of two woven PPL filter pads housed inside a Type 316 stainless steel enclosure. The pads shall be removable for cleaning. This unit shall ship loose and be ready for installation into the odor control system supply ductwork. The housing shall be flanged and drilled, and come complete with gaskets, ready for installation. The filter/eliminator unit shall be an ACS Industries Style 7CA mesh pad assembly with housing, or equal. The unit must come in a suitable FRP housing to allow for proper velocity slow down of air through system.

Further, if having been determined that efficient vapor moisture content control is critical to effective vapor chemical treatment, the OCCP CONTRACTOR shall likewise submit its moisture control recommendations, including but not limited to complete technical details and costs (capital and O & M) to the CITY prior to implementing any installation or media replacement.

2.11 Delivery of Chemical

Products shall be shipped either in bulk for transfer into vessels located at various application sites or in approved-supplier certified- weight shipping containers.

Delivery scheduling and response shall be arranged by the OCCP CONTRACTOR to prevent the interruption of odor and corrosion control services. The OCCP CONTRACTOR shall provide the CITY with a delivery routing plan used by the chemical supplier to each application site. A traffic control plan shall also be provided by the OCCP CONTRACTOR for sites that require the unloading of chemical(s) in the street's right-of-way. A time shall be arranged in advance with the CITY when delivery will be made and security clearance will be provided at the delivery site by the CITY. Deliveries shall be made in vehicles operated by the Supplier or a carrier approved by the CITY; deliveries in commercial vehicles which have not been approved by the CITY will not be accepted. The bulk shipment delivery vehicle shall report to the North Carolina State Ports Authority terminal in Wilmington or other state authorized/ recognized/certified location within the CITY, using the same scale for the entire delivery, both before any chemical product is delivered to the CITY and after all chemical product is delivered to the CITY and shall be weighed on truck scales at this location. The driver shall obtain a written ticket at the Authority certifying the weight both before and after deliveries. The OCCP CONTRACTOR shall notify the CITY in advance of the application sites where deliveries will be made such that the CITY may elect to have a representative present to witness

delivery. As applicable, the OCCP CONTRACTOR shall record the volume of product delivered at each application site, and if delivery is witnessed by a CITY representative, the representative's signature shall be recorded beside the volume as an acknowledgement of agreement with the volume recorded. A copy of the record of volume of deliveries by site, and a record of total weight before and after all deliveries shall be submitted to the CITY. The CITY will not include in payment deliveries for which these conditions have not been met.

The OCCP CONTRACTOR shall include among the services of this Agreement, the collection and laboratory analysis of six samples of chemical product used for odor and corrosion control. The collection of samples shall be made at the time of delivery of chemical to an application site; the date and site shall be selected by the CITY. The samples shall be analyzed for conformance with all product specifications, including purity (active constituents), all metals listed above, and all impurities referenced in the product standards. The CITY may delay notification of the desired date until the specific delivery is enroute to the scheduled application site. Analysis shall be performed by an independent laboratory acceptable to the CITY and a copy of the analysis results delivered to the CITY on report forms directly from the laboratory. The method of sample collection shall conform to the procedure in the referenced product standard.

The CITY shall be permitted to sample the product from the tank at any time for analysis by an independent certified laboratory. Laboratory testing may include both active constituents and contaminants which are restricted by the product specifications.

If the product should fail to meet the required specifications, the CITY may require the defective product to be discontinued from use and promptly removed from the application site and replaced with an equal quantity of acceptable product at no cost to the CITY. The CITY shall also have the option, depending on the severity and potential consequences of the product defectiveness of contamination, or in the event the OCCP CONTRACTOR fails to correct the defectiveness in subsequent deliveries, to terminate the contract with cause.

In the event of a dispute between the CITY and OCCP CONTRACTOR over whether a product delivery was defective or not, the procedures stated in AWWA Standards for "refereeing" the dispute shall be followed. A sufficient number of samples shall be collected at the time of sampling to carry out this procedure if required.

The OCCP CONTRACTOR shall be responsible for compliance with all federal, state, and local laws and regulations with respect to transportation and delivery of this product. The OCCP CONTRACTOR shall hold the CITY harmless from claims resulting from the acts or negligence of the OCCP CONTRACTOR (or by any person acting for the OCCP CONTRACTOR or for whom the OCCP CONTRACTOR is responsible) in transport or during delivery, including product spillage at the application site during delivery. Upon completion of transfer of product from the delivery tanker to the storage tank, and leaving sufficient room for expansion, contraction, and line purging, the OCCP CONTRACTOR shall blow down the transfer line with nitrogen to purge residual product into the storage tank.

2.12 Training and Technical Assistance

Technical service shall be comprised of inventory management, equipment maintenance (labor only; parts by/through the CITY), treatment optimization, testing,

monthly reports, and 24 hour emergency service.

The OCCP CONTRACTOR shall conduct a training session on an annual basis through a factory trained representative to describe safety precautions and procedures, periodic observations recommended by CITY personnel, and emergency procedures, including how to shut down the OCCP CONTRACTOR'S equipment. The purpose of this training is to permit designated CITY, Town, or District personnel to respond to an emergency if one should occur with the product or OCCP CONTRACTOR'S equipment on CITY property and to use safe practices when performing other work near the equipment. Up to three (3) hours shall be allowed by the OCCP CONTRACTOR for this training and for the answering of questions from representatives of the CITY.

For all new sites provided by the OCCP CONTRACTOR, technical information describing all component equipment, including drawings of individual parts and assembly and maintenance instructions, shall be furnished to the CITY. Such information shall include schematics of piping and all electrical controls.

During the time of this contract, the OCCP CONTRACTOR shall provide a qualified technician to report to the chemical treatment sites and treatment plants at least three times per week, and more often as necessary to perform the following functions: (1) inspect the operation and condition of all equipment and provide any equipment maintenance necessary; (2) inspect the level of all storage tanks to compare with anticipated levels based on pump setting during the previous visits, and to schedule the next required product delivery; (3) to perform sampling and testing of wastewater at different times during the day to verify that the odor and corrosion control requirements of this contract are being met without overfeeding of chemical at all times of the day including early morning flows; and (4) to adjust pump feed rates and pump on timers for updated optimized cost-effectiveness and to check the calibration of all pumps using the calibration column to insure that the actual pumping rate equals the new desired rate. The OCCP CONTRACTOR shall maintain optimized control at all times of the day, and shall take into account changes in flow patterns on weekends and holidays. The OCCP CONTRACTOR shall maintain logs of tank levels at each application site, pump settings and time on, and all test data collected.

The vapor phase chemical treatment system shall be initially balanced by the OCCP CONTRACTOR for proper hydraulics within rated design capacities. System inlet and outlet characteristics and chemical/media condition shall be determined initially and as frequently as necessary (but at least once annually) on an ongoing basis by the OCCP CONTRACTOR to establish pollutants of concern, proper media selection, and projected need for media replacement.

The OCCP CONTRACTOR shall respond to a request from the CITY by providing technical assistance on-site within twenty-four (24) hours of notification to correct problems which arise between scheduled visits resulting from malfunction of the OCCP CONTRACTOR'S equipment or conditions which indicate that process adjustments are not optimized. The CITY may independently collect samples to confirm that the performance requirements of this agreement are being met and will request additional technical assistance when reasonable data is collected which concludes that concentrations of pollutants of concern or chemical product residual exceeds the performance requirements.

Using manufacturer's references and CITY staff experience, the OCCP CONTRACTOR shall develop a specific schedule of planned maintenance activities (preventive maintenance). Once approved, the OCCP CONTRACTOR shall perform preventive maintenance and maintain records documenting adherence with a goal of minimizing corrective maintenance. The OCCP CONTRACTOR shall monitor all OCCP equipment for effective, efficient, and economical performance and shall periodically check all systems for availability. The OCCP CONTRACTOR shall stock sufficient spare equipment or equipment components to assure continuity of operations/service and expedited restoration of service in the event of any failure. Excessive corrective maintenance efforts associated with correcting premature deterioration or failure of components attributed to inattention, accident, error, or negligence in operation or preventive maintenance shall be the responsibility of the OCCP CONTRACTOR.

In the event of equipment failure, the OCCP CONTRACTOR shall service and repair or replace equipment, at his option, as necessary to limit the time in which contract odor and corrosion control conditions are not optimized to not greater than 48 hours. Permanent equipment replacement shall require approval by the CITY. During the time repair is being made, the OCCP CONTRACTOR shall increase capacity of remaining equipment as necessary to eliminate the possible release of odors within the control segment during repairs. When equipment cannot be repaired on-site within the 48-hour limit, it shall be replaced with another unit until repairs can be completed.

The OCCP CONTRACTOR shall promptly respond to any report of chemical leakage. The source of the leakage will be promptly determined and corrected by such temporary and/or permanent means as may be available and necessary to halt the leakage, clean up the leakage, and restore service. If contained and deemed to be acceptable for use by the OCCP CONTRACTOR, spilled/contained chemical can be returned to storage; if deemed unacceptable, spilled/contained chemical or any other contaminated debris associated with uncontained spillage shall be replaced and/or disposed as required. Unless determined to be beyond the reasonable control of the OCCP CONTRACTOR, such costs will be borne by the OCCP CONTRACTOR.

2.13 Leak Detection/Containment

As part of the initial mobilization charge, the OCCP CONTRACTOR shall install secondary containment and leak detection at each site identified herein.

The leak containment system shall consist of a concrete structure and chemical – resistant coating or other containment system capable of containing a spill the size of the tank at each location.

The leak detection system shall consist of monitoring devices and automatic relays to notify the proper authorities in case of a spill.

2.14 Contract Transition Period

Unless otherwise documented to the contrary, existing dosing sites utilizing chemical products up to and including the effective date of this contract shall be presumed to be meeting specific standards of performance specified within the previous contract for the entire system under contract. The proposed OCCP system shall be capable of/expected to maintain/attain standards of performance set forth within this contract, but in no case provide less than documented conditions in evidence within the

entire system under control at expiration of the previous contract.

Prosecution of this contract may involve a different approach or strategy to odor corrosion control than that which existed under the preceding agreement. This approach may involve use of treatment principle, treatment chemicals, and/or dosing sites different from those used within the preceding agreement. As a component of this proposal, the OCCP CONTRACTOR shall prepare and submit a detailed description of all treatment chemicals, all dosing sites, and how they will be integrated together into and controlled within a comprehensive odor corrosion control program for the CITY.

In order to enable an orderly transition to the proposed OCCP, the OCCP CONTRACTOR shall be provided a 90 day transition period. The OCCP CONTRACTOR shall immediately assume control of all existing OCCP systems and operate, maintain, monitor, and control them to fully and immediately maintain compliance with contract performance standards. In accordance with his approved plan, the OCCP CONTRACTOR shall undertake any and all actions necessary to result in the proposed OCCP system, including but not limited to temporary or permanent operation of existing systems, modifications to existing systems, temporary or permanent commissioning of new systems, decommissioning of any existing systems no longer deemed necessary within the OCCP CONTRACTOR's proposal to achieve contracted performance standards, and salvage and relocation of any decommissioned systems or system components still possessing service life to new applications so as to attain maximum use of existing OCCP equipment.

2.15 Thirty Day Demonstration Period

From the date of service initiation, and following a 90 day contract transition period, the OCCP CONTRACTOR shall have a thirty (30) day demonstration period during which the OCCP CONTRACTOR shall provide sufficient technical services to optimize chemical treatment and achieve the performance requirements of this agreement. If these requirements are not met and maintained within the fourteen days as defined in Section **2.5.4**, and/or unusual circumstances exist, the CITY may extend the demonstration period an additional seven (7) days. At the end of the demonstration period, if the performance requirements are not being met, the CITY may terminate this agreement and require the OCCP CONTRACTOR to remove all equipment at no cost to the CITY for demobilization.

2.16 Management Reporting and Technical Recommendations

The OCCP CONTRACTOR shall deliver to the CITY by the l5th of each month a monthly management report summarizing the activities of the previous month. This report shall include the dates when technical services were provided, copies of all field data logs and shall identify starting inventory, deliveries made, ending inventory, quantity of chemical used, results of all sampling and testing, and equipment malfunctions and maintenance. The report shall also summarize any unusual observations or conclusions and shall make recommendations when changes are appropriate to further improve odor and corrosion control or to provide more cost-effective services. The report shall also itemize and monitor expenditures on a monthly, annual, and contract basis.

2.17 Exhausted Media Replacement/Disposal:

The OCCP CONTRACTOR will provide periodic analysis on the media in vessels within the program, both present and future, to establish exhaustion rates and provide

data concerning the efficiency of media chosen. Each vessel will be tested annually included within this contract's service fees; if required and authorized by the CITY, the cost of additional testing will be as defined in Section 4.

When testing indicates a need for media replacement the OCCP CONTRACTOR shall notify the CITY of this determination at least thirty (30) days prior to projected replacement. Based upon periodic test results, the OCCP CONTRACTOR shall recommend either replacement-in-kind or substitution of a more effective treatment chemical/media. The OCCP CONTRACTOR shall make all arrangements to test, remove, and dispose of exhausted media in the most economical manner available. Spent media classified as nonhazardous, shall be tested, removed, and disposed in accordance with pricing defined in Section 4. If classified hazardous, the OCCP CONTRACTOR shall develop and submit for the CITY authorization supporting documentation including but not limited to its basis for hazardous classification and an itemized breakdown of costs associated with this material to be reimbursed at a cost not to exceed actual cost plus 20%. Spent media shall be segregated so as to minimize the amount of material affected and/or cross contaminated and necessitate the disposal as hazardous.

Deleted: ¶
¶

3. Term of Agreement

The OCCP CONTRACTOR agrees to furnish the work and services stated herein within thirty (30) calendar days after receiving authorization to proceed from CITY (authorization is expected to be issued at the time contract execution is complete). The OCCP CONTRACTOR shall then maintain all services required by this contract for up to thirty-six months form the date of contract execution, unless services are terminated under provisions stated in section 9.

Subject to the provisions of Section 3.2, this agreement shall have an initial term of thirty-six (36) months commencing on the date of execution of the Agreement. The City and the OCCP CONTRACTOR shall have the option to renew this agreement for two separate twelve (12) months' periods following the initial thirty-six month term and with the written consent of both parties. The procedure for renewal shall be as follows:

Deleted: s

Deleted: January 1, 2004

3.1 If the OCCP CONTRACTOR desires to renew this agreement for an additional twelve (12) month, the OCCP CONTRACTOR shall notify the City not later than 180 days prior to the expiration of the initial term of this agreement or any renewal term as the case may be. The OCCP CONTRACTOR shall then provide written notice to the CITY not later than 60 days prior to expiration of any proposed changes in the prior year's fee schedule as set forth in Section 4.0 to apply to the entire subsequent year. All other fees under this agreement shall remain the same during any renewal term.

Deleted: s

The City shall then have the option to accept renewal, including any proposed changes in fees, or the option to reject the renewal by written notice to the OCCP CONTRACTOR within 30 days after receipt of the Contractor's notice of intent to renew. If the City accepts renewal, all conditions including the fee schedule for the subsequent year shall be binding on the OCCP CONTRACTOR upon receipt of the City's written acceptance for the full twelve (12) month period.

3.2 From the date of service initiation, the OCCP CONTRACTOR shall have a ninety (90) day transition period during which the OCCP CONTRACTOR shall provide

sufficient services to achieve the performance requirements of this agreement. If these requirements are not met and maintained and/or unusual circumstances exist, the CITY may extend the transition period into the 30 day demonstration period in order to document achievement of specified performance requirements. At the end of the demonstration period, if the performance requirements are not met, the CITY may terminate this agreement and require the OCCP CONTRACTOR to cease all operations at no cost to the CITY for demobilization.

In the event that review of the OCCP CONTRACTOR's performance shows nonconformance to the work required by this contract, the scope of services or other terms and conditions contained herein as a result of the contractor's errors, omissions, or negligent acts, the OCCP CONTRACTOR shall be in breach of this agreement and the CITY make take corrective action as it deems necessary including, but not limited to, withholding or reduction of payment.

The CITY shall also have the right to suspend this agreement upon written notice to the OCCP CONTRACTOR. Such written notice shall state the reasons for suspension and allow for a review period of ten (10) days during with the OCCP CONTRACTOR shall be provided with an opportunity to respond with an explanation or justification, and/or shall undertake any reasonable remedial action required by the CITY. If, in the opinion of the CITY, the OCCP CONTRACTOR remains in violation of this agreement at the completion of the ten (10) day suspension period, the CITY shall have the right to terminate this agreement whereupon all obligations of the CITY to the OCCP CONTRACTOR shall cease. The OCCP CONTRACTOR may be allowed to continue operations during the suspension upon written consent from the CITY.

In the event this project is terminated prior to completion of the services by the OCCP CONTRACTOR, the OCCP CONTRACTOR shall be paid for services performed to the date of termination. (In no event will the amount due the contractor exceed that amount set forth in paragraph 4.0 of this agreement. The OCCP CONTRACTOR shall be paid for all reimbursables, as defined herein, which are due him.)

Should changed conditions affect the ability of either the CITY or the OCCP CONTRACTOR to comply with all terms and conditions of the contract or identify the need for additional services the CITY and the OCCP CONTRACTOR may elect to attempt resolution of these issues through negotiation. Failure of these parties to resolve handling of changed conditions to their mutual satisfaction may result in the CITY seeking a full contact termination or a partial contract termination involving contested services while retaining the OCCP CONTRACTOR to perform all other non-contested services. The CITY shall be free to engage other sources of service to execute work deleted from the OCCP CONTRACTOR's scope of services through partial contract termination, and services not specifically identified within this contract. Should condition of partial contract responsibilities/partial contract termination not be acceptable to the OCCP CONTRACTOR, and full contract termination be desired, it shall so notify the CITY of such intent in writing which shall be considered its one-hundred eighty (180) day notice.

Nothing contained herein shall prevent the CITY from pursuing any other remedy which it may have against the OCCP CONTRACTOR including claims for damages.

In the event that either party is unable to perform any of tis obligations under this agreement because of any event which is unavoidable and beyond the control of the affected party, (hereinafter referred to as "Force Majeure Event") including but not restricted to: (1) a labor stoppage, strike action or unrest; (2) a judicial or administrative decree, regulation direction, change in law or threat of initiation of any legal action not the fault of the party who has been affected; (3) communication line failure: (4) power failure; (5) power surge, and (6) any natural disaster or action of GOD, the party who has been so affected shall immediately give written notice to the other party and shall be exused form full performance os long as it is diligently pursuing all reasonable means to eliminate or mitigate the effects of the Force Majeure Event. If the period of nonperformance exceeds fifteen (15) days form the receipt of notice of the Force of Majeure Event, the parties shall attempt to negotiate revised terms which would allow this agreement to continue. In the event such good faith negotiations are unsuccessful after fifteen (15) day negotiating period, the affected party may terminate this agreement and, in such case, the affected party shall have no further obligation to the unaffected party.

4.0 Pricing Schedule

The following is a schedule of fees for compensation by the CITY to the OCCP CONTRACTOR based upon the satisfactory performance of the services under this agreement.

4.0 PRICING SCHEDULE

	Year 1	Year 2	Year 3
1. Contract Transitioning (Cost/Month)			
2. Mobilization (Cost/Site)			
A.. Liquid Phase Treatment			
1 - 2 Concurrent Installations			
3 - 5 Concurrent Installations			
B. Vapor Phase Treatment			
1 - 2 Concurrent Installations			
3 - 5 Concurrent Installations			
C. Instrumentation			
1 - 2 Concurrent Installations			
3 - 5 Concurrent Installations			
3. Demobilization (Cost/Site)			
4. Technical Services (Cost/Site/Month)			
A. Liquid Phase Treatment System			
B. Vapor Phase Treatment System			
C. Instrumentation			
5.. Chemical Product			
A. Hydrogen Peroxide (Cost/Pound Solution)			
1. Fixed Unit Price			
2. Indexed Unit Price			
B. Granular Activated Carbon (GAC) (Cost/Pound Virgin) (Caustic Impregnated)			
C. Potassium Permanganate (Cost/100 Pounds)			
6. Equipment Rental (Cost/Site/Month)			
A. Liquid Treatment System			
B. Vapor Treatment System (Includes 6,500 Barnebey Sutcliffe ST 1-X)			
C. Instrumentation			
7. Equipment Purchase			
A. Liquid Treatment System			
B. Vapor Treatment System			
C. Instrumentation			
Doubled-Contained Dosing Lines (Cost/Foot) (Fittings Extra)			
8. Equipment Depreciation (Cost/System/Month)			
A. Liquid Treatment System			
B. Vapor Treatment System			
C. Instrumentation			
9. Miscellaneous Services			
A. GAC Exhaustion/Replacement/Analysis			
B. Testing, Removal, Disposal/Exhausted Non-Hazardous GAC			
C. GAC Replacement (Disposal of Exhausted GAC, Replacement with New GAC)			

4.1 Contract Transition Period Costs

Regardless of continuation by the current OCCP CONTRACTOR or designation of a new OCCP CONTRACTOR, the OCCP CONTRACTOR shall provide pricing for ALL required goods and services for the 90 day transition period.

The OCCP CONTRACTOR shall factor in all costs to assume control of all existing odor corrosion control facilities and have all odor corrosion facilities identified within his proposal and this contract available within 90 days. The OCCP CONTRACTOR shall make maximum use of decommissioned existing systems no longer required under this contact by relocating them to new sites if compatible and possessing remaining service life. These costs will be defrayed as a monthly fee over the 36 month term of the contract.

4.2 Mobilization and Demobilization of Equipment

Lump sum fees shall be payable to the OCCP CONTRACTOR for mobilization and demobilization of future leased or purchased equipment. Equipment shall include items as indicated in Appendix C and includes secondary containment. The CITY shall review and approve the need for such improvements before installation by the OCCP CONTRACTOR. Should the CITY elect to provide the containment provisions, the OCCP CONTRACTOR shall provide its construction supervision without additional charge.

Mobilization includes complete installation of all equipment, including secondary containment walls for the liquid treatment chemical storage and feed equipment, leak detection and remote monitoring equipment. Said mobilization specifically excludes costs of installing double contained dosing lines with leak detection, which if required be provided at pricing specified in the pricing schedule.

Demobilization shall also include returning the site to the original condition, normal wear and tear excepted.

4.3 Technical Services

Technical services fees in amounts specified on the pricing schedule shall be payable to the OCCP CONTRACTOR for the satisfactory performance of all technical services as provided in Paragraphs 2.12 and 2.13 of this Agreement. The fee shall become due on a monthly basis promptly upon receipt by the CITY of an invoice for such services from the OCCP CONTRACTOR.

4.4 Chemical Product

Unit prices shall be payable to the OCCP CONTRACTOR for the delivery of chemical product to application sites for odor and corrosion control, provided the chemical product meets all requirements of this Agreement. The prices shall be guaranteed by the OCCP CONTRACTOR for the initial term of this Agreement. The OCCP CONTRACTOR shall invoice the CITY not more frequently than monthly and shall provide copies of the "trip" tickets with each invoice.

Hydrogen Peroxide	Cost per pound solution in Year 1 at a minimum of 50% but not to exceed 52% H2O2 by weight. Cost per pound solution in Year 2 at a minimum of 50% but not to exceed 52% H2O2 by weight. Cost per pound solution in Year 3 at a minimum of 50% but not to exceed 52% H2O2 by weight.
Calcium Nitrate	Cost per gallon in Year 1, cost per gallon in Year 2, and cost per gallon in Year 3
Magnesium Hydroxide	Cost per gallon in Year 1 at a minimum 60% but not to exceed 65% by weight. Cost per gallon in Year 2 at a minimum 60% but not to exceed 65% by weight. Cost per gallon in Year 3 at a minimum of 60% but not to exceed 65% by weight.
GAC	Cost per pound/virgin/delivered and placed. Years 1, 2 and 3

Formatted: Indent: Left: 0", Hanging: 2.08"

Deleted: Potassium Permanganate . Cost per 100 pounds total potassium ¶ . . . . . permanganate delivered as 98% by weight. ¶ . . . . . Years 1,2 and 3

Deleted: ¶ GAC . . . . . Cost per pound/virgin/delivered and placed. . . . . Years 1,2 and 3¶

Deleted: ¶

Alternatively, the OCCP CONTRACTOR may offer chemical pricing based upon an industry-accepted/recognized index. An initial product price and index value will be identified; subsequent pricing will be adjusted on a monthly basis or as frequently as it is updated and issued with changes in the index.

The OCCP CONTRACTOR shall document the source of the index, who is responsible for initially originating it, who is responsible for its ongoing maintenance, where it is publicly published/available and factors/principles essential to its computation. The OCCP CONTRACTOR shall produce an objective affidavit from the Chemical Manufacturers Association or other representative professional trade association attesting to its viability. In the event the index may be discontinued, the CITY may accept use of another index, revert to the lump sum annual pricing schedule, or terminate the contract.

In support of the validity and use of this index, the OCCP CONTRACTOR shall provide a 60 month (2006-2010) profile of standardized chemical cost basis and corresponding index values.

Deleted: 1999

Deleted: 0

Deleted: 3

In the event during a given month a chemical residual is detected at the end of a control segment which exceeds the performance requirements of this Agreement, the CITY may withhold 5% of the amount owed for chemical deliveries to the appropriate upstream application site. This amount withheld is agreed by the OCCP CONTRACTOR and the CITY to be liquidated damages and not a penalty for the product which has been "overfed" during the contract month. This amount is fixed and agreed upon by and between the OCCP CONTRACTOR and the CITY because of the impracticability and extreme difficulty of fixing and ascertaining the actual damages the CITY would in such event sustain, and said amount is agreed to be the amount of damages which the CITY would sustain. The assessment of liquidated damages does not relieve the OCCP CONTRACTOR of any other consequences for nonconformance stated in this Agreement.

4.5 Equipment Rental

At its option, the CITY may provide equipment as defined in this Agreement. If the CITY chooses not to do so then the following monthly fees shall be payable to the OCCP CONTRACTOR for rental of equipment while the equipment is operational at the listed application sites below. Equipment shall be that as defined in sections **2.6** through **2.10** and appropriate safety features and shall be consistent with the design indicated in Appendix C.

	EQUIPMENT RENTAL (Cost/System/Month)	EQUIPMENT PURCHASE Appendix C/Equipment Only
Liquid Treatment System (Appendix C equipment)		
Vapor Treatment Systems only; sized/priced for 4,500 cfm capacity; should project conditions dictate otherwise, the OCCP CONTRACTOR shall offer suitably sized/comparably priced systems.		
Instrumentation (includes reliable leak detection and City of Wilmington SCADA-compatible process monitoring telemetry and its calibration)		

4.6 Incentive for Savings

As one of the basis during the term of this agreement, the OCCP CONTRACTOR, with the assistance of the CITY, shall evaluate cost effective and innovative ways to improve efficiency, reduce product consumption and lower costs.

During the term of this contract the OCCP CONTRACTOR may propose activities which may be taken to change the type of chemical product and/or reduce the chemical product usage while continuing to satisfy in every way the performance conditions of this contract. If agreeable to the CITY, the proposal may be implemented, based upon a method agreed to in advance to measure the costs to the CITY of such proposal and to measure the savings in chemical costs during the remainder of the contract period. Measured/documented savings shall be shared equally between the CITY and the OCCP

CONTRACTOR. As applicable, due to joint-use facilities, the CITY's share shall be further shared between the DISTRICT and/or the TOWN in accordance with previously adopted cost-sharing provisions.

Notwithstanding this provision, nothing shall preclude and CITY reserves the right to independently conduct evaluations of alternative odor and corrosion control approaches including field trials/ demonstrations, at its discretion throughout the contract

period. The CITY may elect to accept assistance in conducting these evaluations. As applicable and necessary, particularly when existing facilities are involved, the OCCP CONTRACTOR shall offer its cooperation and if requested, its participation in the prosecution of these evaluations.

4.7 Program Assurances

4.7.1 Performance

Significant unexplained and undocumented differences from projections influencing/predicating the award and ongoing administration of the OCCP contract may form the basis for price adjustment or dismissal of the OCCP CONTRACTOR.

For any continuous six-hour period in which the CITY's specified performance criteria are not met (exceptions for equipment failure retained), OCCP CONTRACTOR will forego its prorated fees for services and equipment (for all its stations) until such time compliance has been restored. This assurance in no way is meant to negate whatever right the CITY may have should extended non-compliance occur.

4.7.2 Cost-Performance

Should either the CITY or OCCP CONTRACTOR identify a more cost- effective treatment procedure once the program is underway (for any of the specified application points), OCCP CONTRACTOR will make the necessary equipment and site changes (excluding product supply) at its cost, and provide the CITY with sufficient documentation to support its "at-cost" fee. This assurance in no way is meant to negate whatever benefits owed OCCP CONTRACTOR should the cost-savings measure be of its design (as detailed in Section 4.5 of the Request for Proposals).

4.8 Purchase Option on Installed Equipment

Any equipment not owned by the CITY that may be installed by the OCCP CONTRACTOR at any and/or all application sites, may be purchased by the CITY, at the option of the CITY, during the term of this Agreement period, at the lump sum prices provided in Section 4.4. If the CITY accepts a purchase option, the equipment purchased will be left in place by the OCCP CONTRACTOR at the expiration date of this Agreement and the purchase price will be due upon the CITY's receipt of an invoice. However, demobilization charges stated in paragraph **4.1** for the specific equipment purchase shall be waived and shall not be payable.

Basic installation only (no H2S-telemetry or back-up feeders).

The CITY may elect to purchase equipment provided by the OCCP CONTRACTOR at any time, calculated to be the difference between the equipment purchase price and the total amount of months depreciation accumulated on that particular unit. Such purchase costs shall be depreciated to zero salvage value over a three year life cycle.

4.9 Progess Payment Invoicing

The OCCP CONTRACTOR shall submit requests for payment for all applicable fees to which it is entitled on a calendar month basis within the following calendar month. Requests for payment shall be itemized and supported by suitable documentation.

Requests for payment shall be submitted directly to the CITY, TOWN, or DISTRICT where only their individual facilities are involved. Requests for payment for joint-use facilities shall be submitted to the CITY for further cost apportionment among the participating jurisdictions in accordance with previously adopted cost-sharing provisions.

All progress payment requests will be accompanied by a summary denoting the currently invoice amount and cumulative expenditures under the Agreement before (exclusive) and after (inclusive of the currently invoiced amount. As applicable, all figures shall be further segregated to reflect CITY, DISTRICT, TOWN or joint-use facilities involved.

4.10 Contract Ceiling

The total sum of fees for all services under this Agreement during the term of thirty-six (36) months shall not exceed an annualized calendar year amount of $_____and a total contact value of $_____without prior written approval of the CITY.

5. Release and Indemnity

5.1 To the fullest extent permitted by law, the OCCP CONTRACTOR shall release, indemnify, keep and save harmless the CITY, its agents, officials and employees, from any and all responsibility or liability for any and all damage or injury of any kind or nature whatever (including death resulting therefrom) to all persons, whether agents, officials or employees of the CITY or third persons, and to all property proximately caused by the negligent acts or failure to act by OCCP CONTRACTOR (or by any person acting for the OCCP CONTRACTOR or for whom the OCCP CONTRACTOR is responsible). The OCCP CONTRACTOR expressly understands and agrees that any performance bond or insurance protection required by this Agreement, or otherwise provided by the OCCP CONTRACTOR, shall in no way limit the OCCP CONTRACTOR'S responsibility to release, indemnify, keep and save harmless and defend the CITY as herein provided. The intention of the parties is to apply and construe broadly in favor of the CITY the foregoing provisions subject to the limitations, if any, set forth in N.C.G.S. 22B-1.

5.2 All activity engaged by the OCCP CONTRACTOR required by this agreement shall be through the authority and/or responsibility of the OCCP CONTRACTOR or its agent(s). Without limiting the generality of sub-paragraph 5.1,
the OCCP CONTRACTOR shall hold the CITY harmless for any work performed by the OCCP CONTRACTOR's personnel, agents or equipment that causes incidents including, but not limited to, chemical spills from overfilling, unloading, or equipment failure.

6. Personnel

It is mutually agreed that OCCP CONTRACTOR is an independent contractor and not an agent of the CITY, and as such the OCCP CONTRACTOR shall not be entitled to any CITY employment benefits, such as but not limited to, vacation, sick leave, insurance, workmen's compensation, or pension and retirement benefits.

7. Conflict of Interest

No paid employee of the CITY shall have a personal or financial interest, direct or indirect, as a contracting party or otherwise, in the performance of this Agreement.

8. Non-Waiver of Rights

It is agreed that the CITY's failure to insist upon the strict performance of any provision of this Agreement, or to exercise any right based upon a breach thereof, or the acceptance of any performance during such breach, shall not constitute a waiver of any rights under this Agreement.

9. Suspension or Termination of Agreement

9.1 In the event that review of the OCCP CONTRACTOR'S performance shows nonconformance to the work required by this contract, the Scope of Services or other terms of conditions contained herein as a result of the OCCP CONTRACTOR'S errors, omission or negligent acts, the OCCP CONTRACTOR shall be in breach of this Agreement and the CITY may take corrective action as it deems necessary including, but not limited to termination, or withholding or reduction of payment.

9.2 The CITY shall also have the right to suspend this Agreement for conditions stated in Paragraph 9.1 upon written notice to the OCCP CONTRACTOR. Such written notice shall state the reasons for suspension and allow for a review period of ten (10) days during which the OCCP CONTRACTOR shall be provided with an opportunity to respond with an explanation or justification, and/or shall undertake any reasonable remedial action required by the CITY. If, in the opinion of the CITY, the OCCP CONTRACTOR remains in violation of this Agreement at the completion of the ten (10) day suspension period, the CITY shall have the right to terminate this Agreement whereupon all obligations of the CITY to the OCCP CONTRACTOR shall cease.

9.3 In the event this project is terminated prior to completion of the services by the OCCP CONTRACTOR, the OCCP CONTRACTOR shall by paid for services performed to the date of termination. (In no event will the amount due OCCP CONTRACTOR in the event of termination exceed that amount set forth in Paragraph 4 of this Agreement for the work performed or chemicals supplied. OCCP CONTRACTOR shall be paid for all reimbursable, as defined herein, which are due him .)

9.4 This Agreement may be terminated without cause by either party upon one-hundred eighty (180) days written notice.

9.5 The CITY shall have the exclusive right to suspend chemical treatment from any application site during the term of this Agreement for any reason whatsoever, and to establish a date for restarting such chemical treatment. The length of any such suspension shall be as determined necessary by the CITY. Provided that the equipment remains stored at the application site and technical services continue along with control segments during the suspension, the CITY shall be obligated to continue to pay the OCCP CONTRACTOR for equipment rental, and/or technical services, respectively, however, the OCCP CONTRACTOR shall have no rights to recover from the CITY any fees or profits associated with chemical product deliveries or use which may have been anticipated but is not furnished during a suspension. If equipment is demobilized or remobilized to an application site as a result of a suspension, the CITY shall pay the OCCP CONTRACTOR the appropriate charges for such services as defined in the fee schedule.

9.6 Nothing contained herein shall prevent the CITY from pursuing any other remedy which it may have against OCCP CONTRACTOR including claims for damages.

9.7 In the event this agreement is terminated by the CITY with cause, or is terminated by the OCCP CONTRACTOR without cause, the fees stated in this agreement for demobilization of equipment shall be waived, and demobilization shall occur at the expense of the OCCP CONTRACTOR.

10. Assignment of Agreement

It is mutually agreed by the parties hereto that this Agreement is not transferable by either party without the written consent of the other party to this Agreement. No subcontracts shall be utilized by the OCCP CONTRACTOR for performing the services under this agreement without the written approval of the CITY.

11. Insurance Requirements

The amount of insurance to be provided for all coverages listed under this section shall be not less than $1,000,000.00, unless otherwise specified, per occurrence for claims arising from bodily injury and/or property damage, including accidental death which may arise directly or indirectly from OCCP CONTRACTOR'S performance of work under this contract. The OCCP CONTRACTOR shall be responsible for any liability directly or indirectly arising out of work performed under this contract by a subcontractor which is not covered by the subcontractor's insurance.

11.1 The OCCP CONTRACTOR shall maintain during the life of this Agreement the statutory WORKERS' COMPENSATION INSURANCE. In addition, EMPLOYER'S LIABILITY INSURANCE in an amount not less than $500,000.00 for each occurrence for all of his employees to be engaged in providing services under this Agreement and, in case any such services are sublet, the OCCP CONTRACTOR shall require the subcontractor similarly to provide workers' compensation insurance and employer's liability insurance for all of the subcontractor's employees to be engaged in such services. Where services under this Agreement includes any water or navigational exposure, coverage shall be included to cover the Federal Longshoremen's and Harborworker's Act and the Federal Jones Act.

11.2 The OCCP CONTRACTOR shall take out and maintain during the life of this contract COMPREHENSIVE GENERAL LIABILITY INSURANCE, including INDEPENDENT CONTRACTORS LIABILITY coverage and CONTRACTUAL LIABILITY insurance covering the OCCP CONTRACTOR'S liability assumed under the paragraph "Release and Indemnity ." The OCCP CONTRACTOR shall take out and maintain during the life of this contract BROAD FORM PROPERTY DAMAGE insurance.

11.3 The OCCP CONTRACTOR shall take out and maintain during the life of this Agreement AUTOMOBILE LIABILITY INSURANCE. Such coverage shall be written on a comprehensive form covering owned, unowned and leased vehicles.

11.4 The OCCP CONTRACTOR shall furnish the schedule of insurance carried under this Agreement, in the form of a document attested by the insurance carrier or his agent, stating and itemizing the several coverages as provided above. The insurance carrier or its agent shall also certify on these documents that it will notify the CITY by registered mail at least twenty (20) days prior to any cancellation or nonrenewal of these coverages.

12. Findings Confidential

All of the information, reports, cost estimates, plans, specifications and documents prepared or assembled by the OCCP CONTRACTOR under this Agreement are the property of the CITY. The OCCP CONTRACTOR agrees that any such documents shall not be made available to any individual or organization other than appropriate CITY officials or as required by law without prior written approval of the CITY. Nothing contained in this paragraph shall be construed to prevent the OCCP CONTRACTOR from making information, reports and documents available to those individuals or firms directly concerned with the project involved with prior written agreement of the CITY.

13. Entire Agreement

This Agreement constitutes the entire understanding of the parties.

14. Subcontracts

The OCCP CONTRACTOR shall utilize no subcontracts for carrying out the services to be performed under this agreement without the written approval of the CITY.

15. Binding Effect

This Agreement shall be binding upon the successors, assigns, agents, officials, employees, independent contractors, and subcontractors of the parties.

16. Continuing Obligation

The parties will make and execute all further instruments and documents required to carry out the purposes and intent of this Agreement.

17. Reference

Use of the masculine includes feminine and neuter, singular includes plural; and captions and headings are inserted for convenience of reference and do not define, describe, extend or limit the scope of intent of the Agreement.

18. Interpretation

All of the terms and conditions contained herein shall be interpreted in accordance with the laws of the State of North Carolina. In the event of a conflict between the various terms and other applicable provisions, then the more particular shall prevail over the general and the more stringent or higher standard shall prevail over the less stringent or lower standard.

19. Saving Clause

If any section, subsection, paragraph, sentence, clause, phrase or portion of this Agreement is for any reason held invalid, unlawful, or unconstitutional by any court of competent jurisdiction, such portion shall be deemed severable and such holding shall not affect the validity of the remaining portions hereof.

20. Other Laws and Regulations

OCCP CONTRACTOR will comply with any and all applicable federal, state and local standards, regulations, laws, statutes and ordinances regarding toxic, hazardous and solid wastes and any other pollutants; public and private nuisances; health or safety; and zoning, subdivision or other land use controls. OCCP CONTRACTOR will take all reasonably necessary, proper or required safety, preventative and remedial measures in accordance with any and all relations and directives from the North Carolina Department of Health, Environment and Natural Resources, the United States Environmental Protection Agency, the North Carolina Division of Environmental Management, Health Departments, and any other federal, state or local agency having jurisdiction, to insure the prompt prevention or cessation (now or in the future) of violations of either the applicable provisions of such standards, regulations, laws, statutes, and ordinances or any permits or conditions issued thereunder.

OCCP CONTRACTOR shall provide five (5) copies of a "Operations Manual", acceptable to the CITY, that would include, but not be limited to, the technical services procedure, equipment schematics, and stating or demonstrating the methodology for compliance with the laws and regulations of the above stated agencies. If such a manual is not available at the time of contract execution, the OCCP CONTRACTOR shall provide such information within ninety (90) days after execution.

21. Amendments

This Agreement shall not be modified or otherwise amended except in writing signed by the parties.

22. NonDiscrimination

The OCCP CONTRACTOR will take affirmative action not to discriminate against any employee or applicant for employment or otherwise illegally deny any person participation in or the benefits of the program which is the subject of this Agreement because of race, creed, color, sex, age, disability or national origin. To the extent applicable, OCCP CONTRACTOR will comply with all provisions of Executive Order No. 1 1246 the Civil Rights Act of 1964, (P.L. 88-352) and 1968 (P.L. 90-284), and all applicable federal, state and local laws, ordinances, rules, regulations, orders instructions, designations and other directives promulgated to prohibit discrimination. Violation of this provision, after notice, shall be a material breach of this Agreement and may result, at CITY's option, in a termination or suspension of this Agreement in whole or in part.

IN WITNESS THEREOF, the CITY has caused this Agreement to be duly executed in its name and behalf and the OCCP CONTRACTOR has caused this Agreement to be duly executed in its name and behalf and it corporate seal to be hereunto affixed, and attested to.

CITY OF WILMINGTON, NORTH CAROLINA

BY: _____
Sterling B. Cheatham, City Manager

ATTEST:

_____
Steven D. Bridges, Director of Central Services

_____

City Clerk

APPROVED AS TO FORM:

_____
City Attorney

_____

_____(Firm's Name)_____

ATTEST:

_____

BY: _____

President, Vice President,
Assistant Vice President

_____
Secretary, Assistant
Secretary, Trust Officer

(CORPORATE SEAL)

CITY ACCOUNTANT'S CERTIFICATION

This instrument has been preaudited in the manner required by the Local Government Budget and Fiscal Control Act this the ____ day of
_____, _____

_____
Finance Officer

STATE OF NORTH CAROLINA
COUNTY OF NEW HANOVER

I, _____ ,a Notary Public of the aforesaid state and county, certify that _____ personally appeared before me this day and, being by me duly sworn, says that she knows the common seal of the City of Wilmington and is acquainted with _____, who is Mayor of the said municipal corporation, and that she, the said, _____is the City Clerk of said municipal corporation and saw the Mayor sign the foregoing instrument, and saw the said common seal of said municipal corporation affixed to said instrument by said Mayor, and that she, the said_____ signed her name in attestation of the execution of said instrument in the presence of said Mayor of said municipal corporation.

WITNESS my hand and notary's seal, this the ____ day of _____, _____

_____

Notary Public

My commission expires: _____

STATE OF _____
COUNTY OF _____

I, _____,a Notary Public, certify that _____ _____ personally came before me this day (Secretary, Assist. Sec., Trust Officer)
and acknowledged that he (she) is _____
(Secretary, Assist. Sec., Trust Officer) of _____ _____, a corporation, and that by
(Name of Corporation)
authority duly given and as the act of the corporation, the foregoing instruction was signed in its name by its _____ _____
(President, Vice President, _____ _____
Assist. Vice President) sealed with its corporate seal, and attested by himself (herself) as its _____ _____.
(Secretary, Assist. Secretary, Trust Officer)

WITNESS my hand and official seal this the ____ day of _____, _____

_____
Notary Public

My commission expires:

_____ (SEAL)

APPENDIX F

Opinions of Probable Construction Cost

NEI Gravity Sewer Rehabilitation/Replacement
Preliminary Opinion of Probable Construction Costs

Alternative 3.4.1.1 Replacement with Directional Drill

Item	Item Description	Unit	Estimated Quantity	Unit Price	Total Cost
1.	Mobilization	LS	1	$14,725	$14,800
2.	20" Directional Drill Force Main	LF	350	$400	$140,000
3.	20" Force Main	EA	260	$175	$45,500
4.	20" Fittings	EA	4	$4,000	$16,000
5.	ARV/Air Vacuum Assembly	EA	1	$18,000	$18,000
6.	Surface Restoration	LS	1	$15,000	$15,000
7.	Traffic Control	LS	1	$10,000	$10,000
8.	Bypass Pumping	LS	1	$50,000	$50,000
				Sub-Total	$309,300
				Contingency (10%)	$31,000
				Total Projected Cost	$340,000

Alternative 3.4.1.2 Replacement with New Force Main

Item	Item Description	Unit	Estimated Quantity	Unit Price	Total Cost
1.	Mobilization	LS	1	$15,000	$15,000
2.	20" Force Main	LF	900	$175	$157,500
3.	20" Fittings	EA	6	$4,000	$24,000
4.	ARV/Air Vacuum Assembly	EA	1	$18,000	$18,000
5.	Surface Restoration	LS	1	$30,000	$30,000
6.	Traffic Control	LS	1	$20,000	$20,000
7.	Bypass Pumping	LS	1	$50,000	$50,000
				Sub-Total	$314,500
				Contingency (10%)	$31,500
				Total Projected Cost	$346,000

Alternative 3.4.1.4 Rehabilitation of Existing 20-inch Gravity

Item	Item Description	Unit	Estimated Quantity	Unit Price	Total Cost
1.	Mobilization	LS	1	$10,000	$10,000
2.	20" Force Main Cured In Place Lining	LF	605	$150	$90,800
3.	Clean, Televise, and Inspect Pipeline	EA	605	$30	$18,150
4.	Reconnect Services	EA	4	$700	$2,800
5.	MH Lining	VF	55	$275	$15,125
6.	Surface Restoration	LS	1	$5,000	$5,000
7.	Traffic Control	LS	1	$3,000	$3,000
8.	Bypass Pumping	LS	1	$50,000	$50,000
				Sub-Total	$194,875
				Contingency (10%)	$19,500
				Total Projected Cost	$214,000

APPENDIX G

ARV Data Sheets

Wilmington NEI - ARV Data Sheet Summary Table

ARV#	Location	Force main	Station	Design Depth: Grade to Pipe Invert	Valve		Vault							
					Make/Model	Condition	Description:	Size	Depth of Cover	Depth: Top slab to vault invert		Condition:	Groundwater	
										Measured	Proposed		Presence	Depth
				(ft)					(ft)	(ft)	(ft)		(Yes/No)	(ft)
1	Along River Rd., between Operations Center Dr. and Independence Blvd.	24" DIP, PS 34	20+71	9.8	Unknown - replaced.	Good.	8" CMU walls on concrete slab, with a precast top.	6.7' x 6.7' outside	1.5'-2.5'	8.2	9.5	Appears to be structurally sound.	Yes	0.3
2	At the Intersection of Spicetree Dr. and Independence Blvd.	24" DIP, PS 34	39+75	7.6	Valmatic Model #48 - 150 psi	Poor, corroded.	8" CMU walls on concrete slab, with a precast top.	6.7' x 6.7' outside	1.5'-3'	6.4	9.8	Appears to be structurally sound.	Yes	2.7
3	At the Intersection of Carolina Beach Rd. and Independence Blvd.	24" DIP, PS 34	95+32	6.0	Valmatic Model #48 - 150 psi	Poor, corroded.	8" CMU walls on concrete slab, with a precast top.	6.7' x 6.7' outside	3'-4'	6.4	10.4	Appears to be structurally sound.	Yes	4.0
4	Near the Intersection of 17th St. and Independence Blvd.	24" DIP, PS 34	139+56	8.0	Valmatic Model #48 - 150 psi	Extremely poor, severely corroded.	4' diameter concrete manhole	5' diameter outside	0			Appears to be structurally sound.	No	0.0
5	At the Intersection of Pine Valley Dr. and Shipyard Blvd.	24" DIP, PS 34	211+50	7.7	Valmatic Model #48 - 150 psi	Extremely poor, severely corroded.	8" CMU walls on concrete slab, with a precast top.	6.7' x 6.7' outside	1'			Appears to be structurally sound.	No	0.0
6	Along Hewlett's Creek, off of Whiner Dr.	24" DIP, PS 34	278+70	9.0	Valmatic Model #48 - 150 psi	Poor, submerged.	8" CMU walls on concrete slab, with a precast top.	6.7' x 6.7' outside	0			Appears to be structurally sound.	No	
7	Along Greenville Loop Road	20" DIP PS 35	7+50	6.8	Removed		Removed							
8	At the Intersection of Hunters Mill Ln. and Greenville Loop Rd.	20" DIP PS 35	42+00	6.9	Valmatic Model #48 - 150 psi	Poor, corroded.	8" CMU walls on concrete slab, with a precast top.	6.7' x 6.7' outside	1.8'	5.8	7.8	Appears to be structurally sound.	No	0.0
9	Along Greenville Loop Rd., between Head Rd. and Leeward Ln.	20" DIP PS 35	74+83	6.6	Valmatic Model #48 - 150 psi	Extremely poor, severely corroded.	8" CMU walls on concrete slab, with a precast top.	6.7' x 6.7' outside	1'	6.0	6.0	Appears to be structurally sound.	Yes	2.0
10	Along Greenville Loop Rd., near Shinnwood Rd.	20" DIP PS 35	106+27	5.7	Valmatic Model #48 - 150 psi	Extremely poor, severely corroded.	8" CMU walls on concrete slab, with a precast top.	6.7' x 6.7' outside	0	6.8	6.8	Appears to be structurally sound.	Yes	2.4
11	Near Intersection of Rice Rd. and Greenville Loop Rd.	20" DIP PS 35	129+08	6.8	Valmatic Model #48 - 150 psi	Poor, corroded.	8" CMU walls on concrete slab, with a precast top.	6.7' x 6.7' outside	0	6.3	6.3	One wall is failing.	Yes	2.9
12	Near Intersection of Oleader Dr. and Greenville Loop Rd.	20" DIP PS 35	151+50	6.9	Valmatic Model #48 - 150 psi	Extremely poor, severely corroded.	8" CMU walls on concrete slab, with a precast top.	6.7' x 6.7' outside	2'	6.4	8.4	Appears to be structurally sound.	Yes	0.3

Kimley-Horn and Associates, Inc.

Northeast Interceptor Improvements
ARV Data Sheet

ARV#: 1

Location: Along River Rd.

Force Main: 24" DIP, PS 34

Station: 20+71

Design Depth to Pipe Invert (from Grade): 9.8'

Valve:

Make/Model: Replacement ARV

Condition: Good

Operable: Appears to be.

Comments:

Vault:

Description: 8" CMU walls, conc. slab bottom, precast top

Size: 6'-8" x 6'-8" outside

Depth: Top casting to bottom – 8'-9"
Top slab to bottom – 8'-2"

Condition: Appears structurally sound.

Groundwater Presence: Yes, approx. 3".

Depth of fill: approximately 1.5'-2.5'

Interim Retrofit Recommendations:

- Replace the tapped blind flange, nipple, gate valve and air release valve with a new tapped flange, 300 psi ball corporation stop, and a 1-inch combination air/vacuum pressure release valve.
- Raise the vault to grade. Install two (2) courses of 8" CMU and reinstall the existing top. Add 6" DIP vent to right of way line.

Photo to be added.

Above grade

Northeast Interceptor Improvements
ARV Data Sheet

Above grade after excavation

Interior

Kimley-Horn and Associates, Inc.

Northeast Interceptor Improvements
ARV Data Sheet

ARV#: 2

Location: At the Intersection of Spicetree Dr. and Independence Blvd.

Force Main: 24" DIP, PS 34

Station: 39+75

Design Depth to Pipe Invert (from Grade): 7.6'

Valve:

Make/Model: Valmatic Model #48-150 PSI

Condition: Poor, corroded

Operable: Did not check due to corrosion.

Comments:

Vault:

Description: 8" CMU walls, conc. slab bottom, precast top

Size: 6'-8" x 6'-8" outside

Depth: Top casting to bottom – 7'-0"
Top slab to bottom – 6'-5"

Condition: Appears structurally sound.

Groundwater Presence: Yes, 3'-9" from top slab, within 2" of top of branch flange

Depth of fill: approximately 1.5'-3'

Interim Retrofit Recommendations:

- Replace the tapped blind flange, nipple, gate valve and air release valve with a new tapped flange, 300 psi ball corporation stop, and a 1-inch combination air/vacuum pressure release valve.
- Raise the vault to grade. Install four (4) courses of 8" CMU and reinstall the existing top. Add 6" DIP vent to right of way line.

Above grade prior to excavation

Kimley-Horn and Associates, Inc.

Above grade after excavation

Interior prior to dewatering/testing

Interior prior to dewatering/testing

Interior after testing

Northeast Interceptor Improvements
ARV Data Sheet

ARV#: 3

Location: At the Intersection of Carolina Beach Rd. and Independence Blvd.

Force Main: 24" DIP, PS 34

Station: 95+32

Design Depth to Pipe Invert (from Grade): 6'0"

Valve:

Make/Model: Valmatic Model #48-150 PSI

Condition: Poor, corroded

Operable: Did not check due to corrosion.

Comments:

Vault:

Description: 8" CMU walls, conc. slab bottom, precast top with 24" casting in top

Size: 6'-8" x 6'-8" outside

Depth: Top casting to bottom – 6'-5"
Top slab to bottom – 6'-5"

Condition: Appears structurally sound.

Groundwater Presence: Yes, 2'-5" down from top slab

Depth of fill: approximately 3'-4'

Interim Retrofit Recommendations:

- Replace the tapped blind flange, nipple, gate valve and air release valve with a new tapped flange, 300 psi ball corporation stop, and a 1-inch combination air/vacuum pressure release valve.
- Raise the vault to grade. Install six (6) courses of 8" CMU and reinstall the existing top. Add 6" DIP vent to right of way line.

Above grade prior to excavation

Kimley-Horn and Associates, Inc.

Northeast Interceptor Improvements
ARV Data Sheet

Above grade after excavation

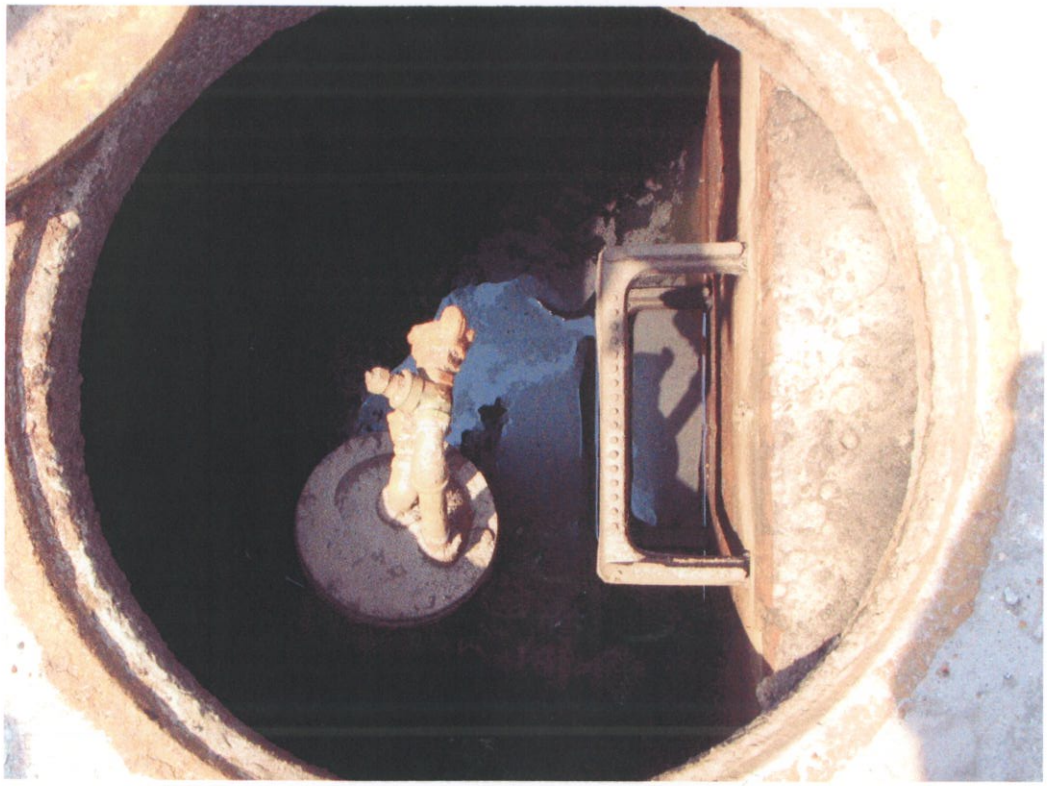

Interior prior to dewatering

Kimley-Horn and Associates, Inc.

Interior after testing

Interior after testing

Northeast Interceptor Improvements
ARV Data Sheet

ARV#: 4

Location: Near the Intersection of 17th St. and Independence Blvd.

Force Main: 24" DIP, PS 34

Station: 139+56

Design Depth to Pipe Invert (from Grade): 8'

Valve:

Make/Model: Valmatic Model #48-150 PSI

Condition: Extremely poor, severely corroded.

Operable: Did not check due to corrosion.

Vault:

Description: precast manhole, 6' dia. precast top with 24" casting on top

Size: 4' dia.

Depth: Top casting to bottom –

Top slab to bottom –

Condition: Extremely poor, corroded.

Groundwater Presence: No.

Depth of fill: approximately 1'over cover, approximately 2' over top

Comments:

- Tee is severely corroded.

Interim Retrofit Recommendations:

- Replace the air release valve and vault with a 1-inch combination air/vacuum pressure release valve in a dual compartment air release valve vault.

Above grade prior to excavation

Above grade after excavation

Above grade after excavation

Interior

Interior after testing

Northeast Interceptor Improvements
ARV Data Sheet

ARV#: 5

Location: At the Intersection of Pine Valley Dr. and Shipyard Blvd.

Force Main: 24" DIP, PS 34

Station: 211+50

Design Depth to Pipe Invert (from Grade): 7.7'

Valve:

Make/Model: Valmatic Model #48-150 PSI

Condition: Extremely poor, corroded.

Operable: Did not check due to corrosion.

Vault:

Description: 8" CMU walls, conc. slab bottom, precast top with 30" casting on top

Size: 6'-8" x 6'-8" outside

Depth: Top casting to bottom –

Top slab to bottom –

Condition: Appears structurally sound.

Groundwater Presence: Yes, some in the past.

Depth of fill: approximately 8"

Comments:

- Force main will be replaced along Shipyard Boulevard. Valve vault will be abandoned or demolished.

Interim Retrofit Recommendations:

- None required.

Above grade prior to excavation

Kimley-Horn and Associates, Inc.

Interior prior to testing

Interior prior to testing

Northeast Interceptor Improvements
ARV Data Sheet

ARV#: 6

Location: Along Hewletts Creek, off of Whitner Dr.

Force Main: 24" DIP, PS 34

Station: 278+70

Design Depth to Pipe Invert (from Grade): 9'

Valve:

Make/Model: Valmatic Model #48-150 PSI

Condition: Poor, has been submerged.

Operable:

Vault:

Description: 8" CMU walls, conc. slab bottom, precast top

Size: estimated 6'-8" x 6'-8" outside

Depth: Top casting to bottom –

Top slab to bottom –

Condition: Appears structurally sound.

Groundwater Presence: Yes, approx. full

Depth of fill: 0'

Comments:

The vault stays full of water. An air/vacuum valve will not function properly at this location due to the fact that it will be submerged.

Interim Retrofit Recommendations:

- Replace the air release valve and vault with a 1-inch combination air/vacuum pressure release valve in a dual compartment air release valve vault at the end of Cascade Drive.

Above grade

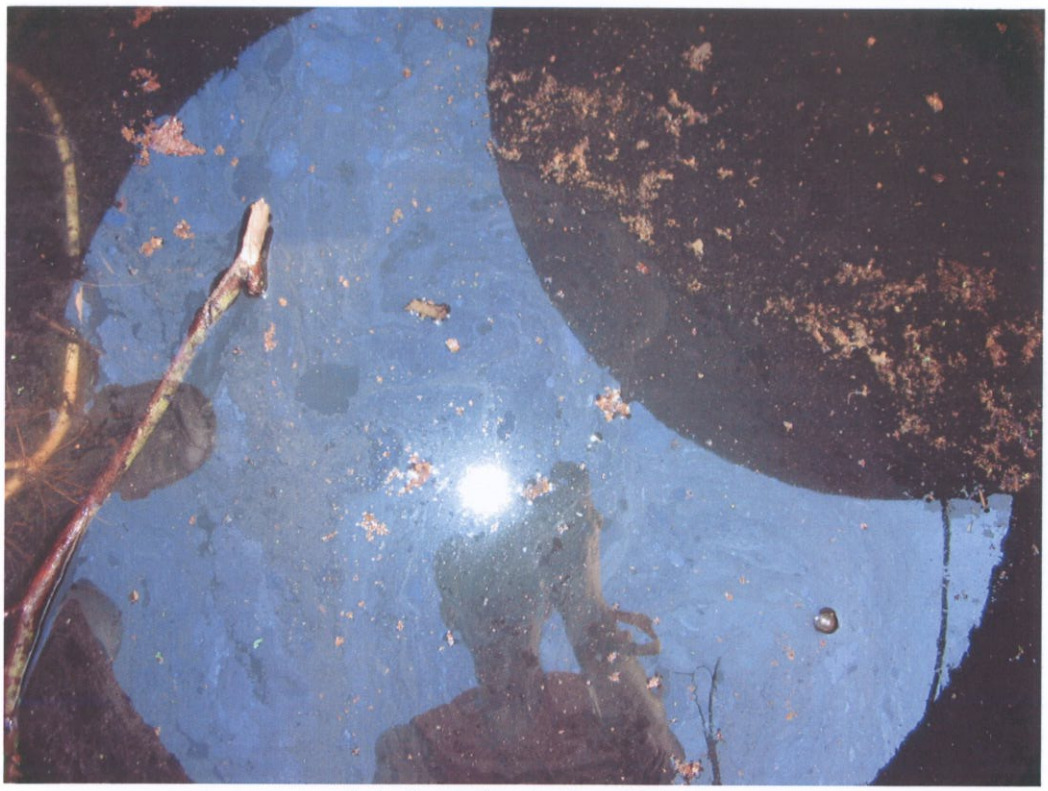

Interior prior to dewatering

Interior prior to testing

Northeast Interceptor Improvements
ARV Data Sheet

ARV#: 8

Location: At the Intersection of Hunters Mill Ln. and Greenville Loop Rd.

Force Main: 20" DIP, PS 35

Station: 42+00

Design Depth to Pipe Invert (From Grade): 6.9'

Valve:

Make/Model: Valmatic Model #48-150 PSI

Condition: Fair/poor, some corrosion

Operable: Did not check due to corrosion.

Vault:

Description: 8" CMU walls, conc. slab bottom, precast top with 30" casting on top

Size: 6'-8" x 6'-8" outside

Depth: Top casting to bottom – 6'-5"

Top slab to bottom – 5'- 10"

Condition: Appears structurally sound.

Groundwater Presence: No.

Depth of fill: 1.8'

Comments:

- Tee is 20" x 8"

Interim Retrofit Recommendations:

- Replace the tapped blind flange, nipple, gate valve and air release valve with a new tapped flange, 300 psi ball corporation stop, and a 1-inch combination air/vacuum pressure release valve.
- Raise the vault to grade. Install two (2) courses of 8" CMU and reinstall the existing top. Add 6" DIP vent to right of way line.

Above grade prior to excavation

Kimley-Horn and Associates, Inc.

Northeast Interceptor Improvements
ARV Data Sheet

Above grade after excavation

Above grade after excavation

Northeast Interceptor Improvements
ARV Data Sheet

Interior prior to testing

Interior after testing

Northeast Interceptor Improvements
ARV Data Sheet

ARV#: 9

Location: Along Greenville Loop Rd., between Head Rd. and Leeward Ln.

Force Main: 20" DIP, PS 35

Station: 74+83

Design Depth to Pipe Invert (from Grade): 6.6'

Valve:

Make/Model: Valmatic Model #48-150 PSI

Condition: Extremely poor, severely corroded

Operable: Did not check due to corrosion.

Vault:

Description: 8" CMU walls, conc. slab bottom, 30" dia casting on precast top

Size: 6'-8" x 6'-8" outside

Depth: Top casting to bottom – 6'-8"
Top slab to bottom – 6'-0"

Condition: Appears structurally sound.

Groundwater Presence: Yes, approx. 24",

Depth of fill: approximately 8"

Comments:

- Severely corroded bolts and flange

Interim Retrofit Recommendations:

- Replace the tapped blind flange, nipple, gate valve and air release valve with a new tapped flange, 300 psi ball corporation stop, and a 1-inch combination air/vacuum pressure release valve.
- Add a 6" DIP vent to right of way line.

Above grade prior to excavation

Northeast Interceptor Improvements
ARV Data Sheet

Above grade after excavation

Interior prior to dewatering/testing

Interior prior to dewatering/testing

Interior after dewatering

Northeast Interceptor Improvements
ARV Data Sheet

ARV#: 10

Location: Along Greenville Loop Rd., near Shinnwood Rd.

Force Main: 20" DIP, PS 35

Station: 106+27

Design Depth to Pipe Invert (from Grade): 5.7

Valve:

Make/Model: Valmatic Model #48-150 PSI

Condition: Extremely poor, severely corroded

Operable: Did not check due to corrosion.

Vault:

Description: 8" CMU walls, conc. slab bottom, 30" dia. casting in precast top

Size: 6'-8" x 6'-8" outside

Depth: Top casting to bottom – 6'-9"
Top slab to bottom – 6'-9"

Condition: Appears structurally sound.

Groundwater Presence: Yes, 4'-4" from top slab, approx. 28"

Depth of fill: None.

Comments:

This vault lies within the section of force main that will be replaced; therefore it will be replaced and no interim recommendations will be made.

Interim Retrofit Recommendations:

- Replace the air release valve and vault with a 1-inch combination air/vacuum pressure release valve in a dual compartment air release valve vault.

Above grade

Kimley-Horn and Associates, Inc.

Northeast Interceptor Improvements
ARV Data Sheet

Interior prior to dewatering/testing

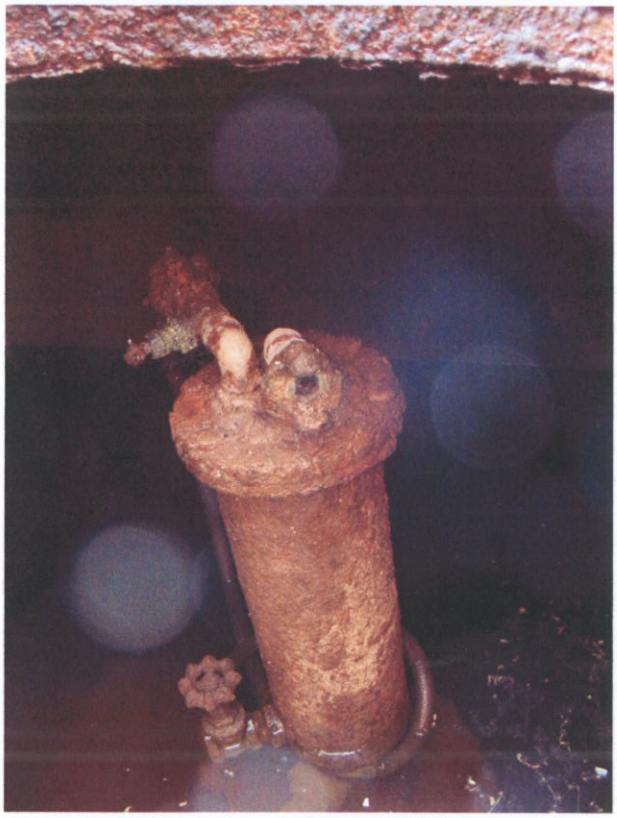

Interior prior to dewatering/testing

Northeast Interceptor Improvements
ARV Data Sheet

ARV#: 11

Location: Near Intersection of Rice Rd. and Greenville Loop Rd.

Force Main: 20" DIP, PS 35

Station: 129+08

Design Depth to Pipe Invert (from Grade): 6.8'

Valve:

Make/Model: Valmatic Model #48-150 PSI

Condition: Poor, corroded

Operable: Did not check due to corrosion.

Vault:

Description: 8" CMU walls, conc. slab bottom, 30" dia. casting in precast top

Size: 6'-8" x 6'-8" outside

Depth: Top casting to bottom – 6'-3"
Top slab to bottom – 6'-3"

Condition:

Groundwater Presence: Yes, 3'-4" from top slab, approx. 2'-9" deep.

Depth of fill: None.

Comments:

- Vault wall along edge of roadway is collapsing into the vault.

Interim Retrofit Recommendations:

- Replace collapsing wall with 8-inch reinforced CMU wall.
- Replace the tapped blind flange, nipple, gate valve and air release valve with a new tapped flange, 300 psi ball corporation stop, and a 1-inch combination air/vacuum pressure release valve.
- Add a 6" DIP vent to right of way line.

Above grade prior to excavation

Kimley-Horn and Associates, Inc.

Northeast Interceptor Improvements
ARV Data Sheet

Above grade after excavation

Interior prior to dewatering/testing

Interior prior to dewatering/testing

Interior during testing

Northeast Interceptor Improvements
ARV Data Sheet

ARV#: 12

Location: Near Intersection of Oleander Dr. and Greenville Loop Rd.

Force Main: 20" DIP, PS 35

Station: 151+50

Design Depth to Pipe Invert (from Grade): 6.9'

Valve:

Make/Model: Valmatic Model #48-150 PSI

Condition: Extremely poor, severely corroded

Operable: Did not check due to corrosion.

Comments:

Vault:

Description: 8" CMU walls, conc. slab bottom, 30" dia. casting, precast top

Size: 6'-8" x 6'-8" outside

Depth: Top casting to bottom – 7'-0"

Top slab to bottom – 6'-5"

Condition: Appears structurally sound.

Groundwater Presence: Yes, approx. 3"-6"

Depth of fill: approximately 1'-9"

Interim Retrofit Recommendations:

- Replace the tapped blind flange, nipple, gate valve and air release valve with a new tapped flange, 300 psi ball corporation stop, and a 1-inch combination air/vacuum pressure release valve.
- Raise the vault to grade. Install two (2) courses of 8" CMU and reinstall the existing top. Add 6" DIP vent to right of way line.

Above grade prior to excavation

Kimley-Horn and Associates, Inc.

Above grade after excavation

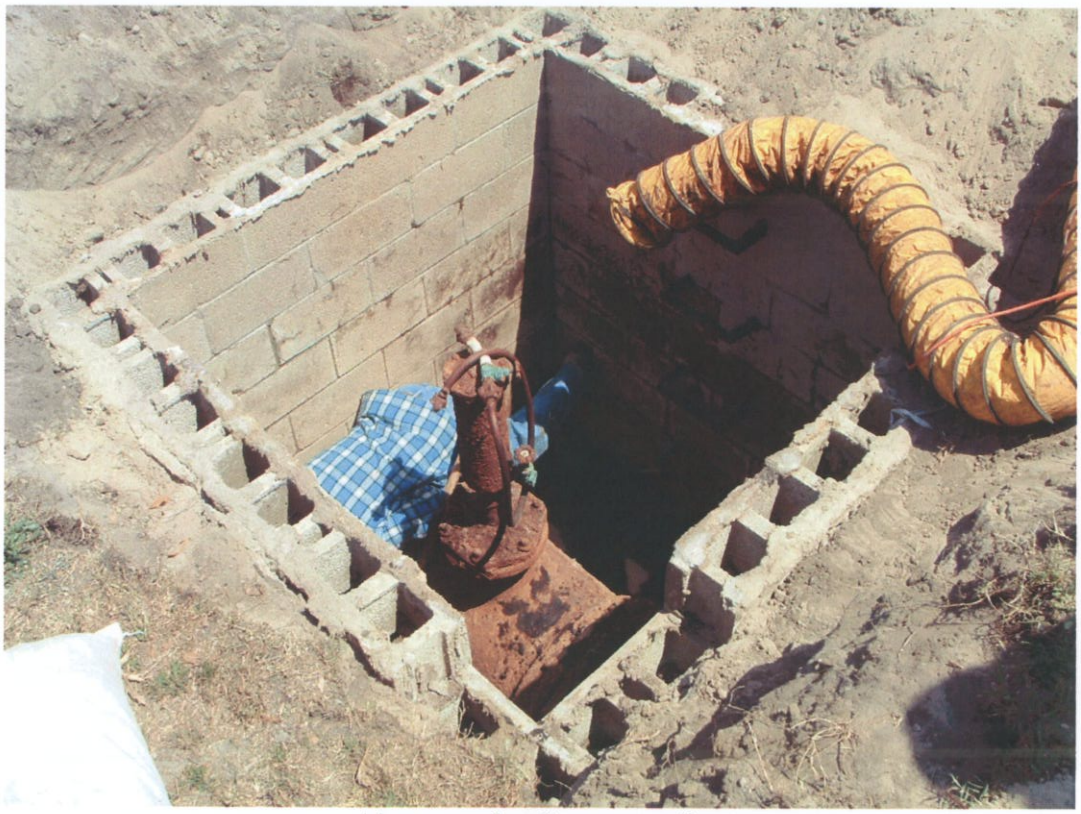

Above grade after excavation

Interior prior to dewatering

Interior after dewatering

APPENDIX H

Daily Pump Station Maintenance Log

DAILY PUMP STATION MAINTENANCE LOG

DUTIES PERFORMED	2	5	6	13	14	15	16	17-A	21	25-A	26	27	29	30	34	35	36	37	38	39	42
Check vent fan prior to entering pump station-check for working																					
*Record Metering Readings: Flow-D, Pump-D, Counters-D																					
Clean/wash down barscreen areas-rake & remove bar screen material, empty it																					
Observe water level in wet well each day, observe basket conditions																					
Check equipment for proper lubrication levels, work request for adjust level																					
Perform general housekeeping duties																					
Check operation of dehumidifiers, blowers, sump pumps																					
Check and maintain chemicals as needed																					
Check fuel level & request for re-order as needed, propane, diesel, etc.																					
Check motor & bearing temperatures																					
Monthly check fire extinguishers & make safety checks																					
Check Calgon System																					
Check grit removal equip.-empty bar screen grit & solids into dumpster																					
Check air compressors for proper operation, pressure, unusual noise heat, etc.																					

***D - Daily**
M - Monthly
X - Items Operating O.K./Task Complete
A - Items Require Action/WO Initial
I/A - Items Required Immediate Action/WO Initialed

Pump Station Operator Name: _____

Date: _____

APPENDIX I

SCADA Screen Shots and List of Monitored Data

Special

PumpStation35

SYSTEM

Auto | SCADA PLC | Process Setpoints | Cycle Duration | Lead / Lag | Print

Can not change Local Pump Control Mode

Utility Power: N/A
Emergency Power:
Station Power Source: N/A
Input Voltage: N/A
Load Power: N/A

Generator

Intrusion

3 PHASE POWER MONITORING

Wetwell Level
2.7 FT

LT

Effluent Flow
0 GPM

FT

Influent Flow
0 GPM

FT

Bar Screen 1

Conveyor

Odor Control Fan 1

Odor Control Fan 2

LOW FLOW ALARMS

Date	Time	State	Operator	Comment	Name	Group	Value	Limit	Pri...
15 Mar	09:18	UNACK	MMOW1/None	PS34 INTRUSION, ALARM	PS34-XA-016	MKean-Maffitt	ALARM	ALARM	1
15 Mar	18:15	UNACK	MMOW1/None	PS43 Communications	COMMPS43	$System	FAIL	FAIL	1

user: Administrator access level: 9999 GE Team Controls window: Pumpstation35 file: win00186.win 3/15/2006 6:22:51 PM

City of Wilmington, North Carolina
Pump Station 35 - Monitored Data

Tagname	Group	Description
PS35-AutoManu	MKean-Maffitt	Auto/Manual Mode, Auto = 1, %M0016
PS35-AutoRota	MKean-Maffitt	PS35 Pump Auto Rotation Mode
PS35-BarS1-IniRunTm	MKean-Maffitt	PS35 Initialize Run Time
PS35-CabComAlr	MKean-Maffitt	Cabinet Common Alarm
PS35-Conv-IniRunTm	MKean-Maffitt	PS35 Initialize Run Time
PS35-EFBT	MKean-Maffitt	Effluent flow broken X-mtr
PS35-Fan1-IniRunTm	MKean-Maffitt	PS35 Initialize Run Time
PS35-Fan2-IniRunTm	MKean-Maffitt	PS35 Initialize Run Time
PS35-Gen-AutoManu	MKean-Maffitt	PS35 Gen Auto Manu Mode
PS35-GEN-FTR	MKean-Maffitt	Generator FAIL TO RUN flag
PS35-GEN-FTS	MKean-Maffitt	Generator FAIL TO STOP flag
PS35-Gen-ManStart	MKean-Maffitt	Manual Generator Start
PS35-Gen-ManStop	MKean-Maffitt	Manual Generator Stop
PS35-Gen-TimeSync	MKean-Maffitt	Generator Scheduler Time Sync bit for PLC
PS35-IFBT	MKean-Maffitt	Inffluent flow broken X-mtr
PS35-IniGenRunTm	MKean-Maffitt	PS35 Initialize Generator Run Time, %M0096
PS35-JA-018	MKean-Maffitt	Loss of cabinet power
PS35-JA-021	MKean-Maffitt	Bubbler pressure low
PS35-LAH-002	MKean-Maffitt	PS35 INFLUENT CHANNEL 1 LEVEL, HIGH
PS35-LAH-003	MKean-Maffitt	PS35 INFLUENT CHANNEL 2 LEVEL, HIGH
PS35-LAH-009	MKean-Maffitt	PS35 WETWELL LEVEL, HIGH
PS35-LAH-015	MKean-Maffitt	PS35 DRYWELL FLOODING, ALARM
PS35-P1-FTR	MKean-Maffitt	Fail to run
PS35-P1-FTS	MKean-Maffitt	Pump 1 FTS
PS35-P1-IniRunTm	MKean-Maffitt	PS35 Initialize Pump 1 Runtime
PS35-P1-ManuSS	MKean-Maffitt	PS35 Manual P1 Str/Stp
PS35-P2-FTR	MKean-Maffitt	Fail to run
PS35-P2-FTS	MKean-Maffitt	Fail to start
PS35-P2-IniRunTm	MKean-Maffitt	Initialize Pump Runtime
PS35-P2-ManuSS	MKean-Maffitt	PS35 Manual P2 Str/Stp
PS35-P3-FTR	MKean-Maffitt	Pump 3 FTR
PS35-P3-FTS	MKean-Maffitt	Pump 3 FTS
PS35-P3-IniRunTm	MKean-Maffitt	PS35 Initialize Pump 3 Runtime
PS35-P3-ManuSS	MKean-Maffitt	PS35 Manual P3 Str/Stp
PS35-P4-FTR	MKean-Maffitt	Pump 4 FTR
PS35-P4-FTS	MKean-Maffitt	Pump 4 FTS
PS35-P4-IniRunTm	MKean-Maffitt	PS35 Initialize Pump 4 Runtime
PS35-P4-ManuSS	MKean-Maffitt	PS35 Manual P4 Str/Stp
PS35-P4-SpeedBT	MKean-Maffitt	PS35 Pump speed Broken X-mtr
PS35-PhaseA-BBT	MKean-Maffitt	PS35 VT PhA-B Broken X-mtr
PS35-PhaseABT	MKean-Maffitt	PS35 CT PhA Broken X-mtr
PS35-PhaseBBT	MKean-Maffitt	PS35 CT PhB Broken X-mtr
PS35-PhaseB-CBT	MKean-Maffitt	PS35 VT PhB-C Broken X-mtr
PS35-PhaseC-ABT	MKean-Maffitt	PS35 VT PhA-C Broken X-mtr
PS35-PhaseCBT	MKean-Maffitt	PS35 CT PhC Broken X-mtr
PS35-PLC-LOC	MKean-Maffitt	PS35 SCADA PLC/Local Select
PS35-SCADALead	MKean-Maffitt	Pump 3 SCADA Lead
PS35-TAH-017	MKean-Maffitt	CABINET HIGH TEMP ALARM
PS35-WWBT	MKean-Maffitt	PS35 Wetwell Level Broken X-mtr
PS35-XA-004	MKean-Maffitt	PS35 BAR SCREEN 1, FAIL
PS35-XA-006	MKean-Maffitt	PS35 CONVEYOR, FAIL

City of Wilmington, North Carolina
Pump Station 35 - Monitored Data

Tagname	Group	Description
PS35-XA-007	MKean-Maffitt	PS35 ODOR CONTROL FAN1, FAIL
PS35-XA-008	MKean-Maffitt	PS35 ODOR CONTROL FAN2, FAIL
PS35-XA-011	MKean-Maffitt	PS35 PUMP 1, FAIL
PS35-XA-012	MKean-Maffitt	PS35 PUMP 2, FAIL
PS35-XA-013	MKean-Maffitt	PS35 PUMP 3, FAIL
PS35-XA-014	MKean-Maffitt	PS35 PUMP 4, FAIL
PS35-XA-016	MKean-Maffitt	PS35 INTRUSION, ALARM
PS35-XA-019	MKean-Maffitt	PS35 GENERATOR, FAIL
PS35-YA-021	MKean-Maffitt	Flowmatcher PLC FAIL
PS35-YI-004	MKean-Maffitt	PS35 BAR SCREEN 1, RUN
PS35-YI-006	MKean-Maffitt	PS35 CONVEYOR, RUN
PS35-YI-007	MKean-Maffitt	PS35 ODOR CONTROL FAN1, RUN
PS35-YI-008	MKean-Maffitt	PS35 ODOR CONTROL FAN2, RUN
PS35-YI-011	MKean-Maffitt	PS35 PUMP 1, RUN
PS35-YI-012	MKean-Maffitt	PS35 PUMP 2, RUN
PS35-YI-013	MKean-Maffitt	PS35 PUMP 3, RUN
PS35-YI-014	MKean-Maffitt	PS35 PUMP 4, RUN
PS35-YI-019	MKean-Maffitt	PS35 GENERATOR, RUN
PS35-YI-020A	MKean-Maffitt	PS35 ATS, STAND-BY
PS35-YN-017	MKean-Maffitt	PS35 CONTROL, PLC
PS35-BarS1-01HCurCnt	MKean-Maffitt	0.1Hours Cntr Current Count
PS35-BarS1-DCurCnt	MKean-Maffitt	Days Cntr Current Count
PS35-BarS1-HCurCnt	MKean-Maffitt	Hours Cntr Current Count
PS35-Conv-01HCurCnt	MKean-Maffitt	Conveyer .1Hours Cntr Current Count
PS35-Conv-DCurCnt	MKean-Maffitt	Conveyer Days Cntr Current Count
PS35-Conv-HCurCnt	MKean-Maffitt	Conveyer Hours Cntr Current Count
PS35-Fan1-01HCurCnt	MKean-Maffitt	0.1Hours Cntr Current Count
PS35-Fan1-DCurCnt	MKean-Maffitt	Days Cntr Current Count
PS35-Fan1-HCurCnt	MKean-Maffitt	Hours Cntr Current Count
PS35-Fan2-01HCurCnt	MKean-Maffitt	0.1Hours Cntr Current Count
PS35-Fan2-DCurCnt	MKean-Maffitt	Days Cntr Current Count
PS35-Fan2-HCurCnt	MKean-Maffitt	Hours Cntr Current Count
PS35-Gen-01HCurCnt	MKean-Maffitt	Gen .1Hours Cntr Current Count
PS35-Gen-DCurCnt	MKean-Maffitt	Gen Days Cntr Current Count
PS35-Gen-HCurCnt	MKean-Maffitt	Gen Hours Cntr Current Count
PS35-P1-01HCurCnt	MKean-Maffitt	P1 .1Hours Cntr Current Count
PS35-P1-DCurCnt	MKean-Maffitt	P1 Days Cntr Current Count
PS35-P1-HCurCnt	MKean-Maffitt	P1 Hours Cntr Current Count
PS35-P2-01HCurCnt	MKean-Maffitt	P2 .1Hours Cntr Current Count
PS35-P2-DCurCnt	MKean-Maffitt	P2 Days Cntr Current Count
PS35-P2-HCurCnt	MKean-Maffitt	P2 Hours Cntr Current Count
PS35-P3-01HCurCnt	MKean-Maffitt	P3 .1Hours Cntr Current Count
PS35-P3-DCurCnt	MKean-Maffitt	P3 Days Cntr Current Count
PS35-P3-HCurCnt	MKean-Maffitt	P3 Hours Cntr Current Count
PS35-P4-01HCurCnt	MKean-Maffitt	P4 .1Hours Cntr Current Count
PS35-P4-DCurCnt	MKean-Maffitt	P4 Days Cntr Current Count
PS35-P4-HCurCnt	MKean-Maffitt	P4 Hours Cntr Current Count
PS35-BarS1-TmpIniRuntST	MKean-Maffitt	Indirect temporary storage of fan runtime
PS35-BarS2-TmpIniRuntST	MKean-Maffitt	Indirect temporary storage of fan runtime
PS35-Conv-TmpIniRuntST	MKean-Maffitt	Indirect temporary storage of conveyer runtime
PS35-Fan1-TmpIniRuntST	MKean-Maffitt	Indirect temporary storage of fan runtime

City of Wilmington, North Carolina
Pump Station 35 - Monitored Data

Tagname	Group	Description
PS35-Fan2-TmpIniRuntST	MKean-Maffitt	Indirect temporary storage of fan runtime
PS35-Gen-TmpIniRuntST	MKean-Maffitt	PS35 Gen Temp Initial Runtime Setting
PS35-P1-TmpIniRuntST	MKean-Maffitt	PS35 P1 Temp Initial Runtime Setting
PS35-P2-TmpIniRuntST	MKean-Maffitt	PS35 P2 Temp Initial Runtime Setting
PS35-P3-TmpIniRuntST	MKean-Maffitt	PS35 P3 Temp Initial Runtime Setting
PS35-P4-TmpIniRuntST	MKean-Maffitt	PS35 P4 Temp Initial Runtime Setting
PS35-PmpNo	MKean-Maffitt	Pump No.
PS35-1&2pumpAmpSP	MKean-Maffitt	Max I Value (Amps) for 2 pumps running
PS35-1or2pumpAmpSP	MKean-Maffitt	Max I Value (Amps) for 1 pump running
PS35-3pumpAmpSP	MKean-Maffitt	Max I Value (Amps) for 3 pumps running
PS35-4pumpAmpSP	MKean-Maffitt	Max I Value (Amps) for 4 pumps running
PS35-BarS1-01HIniRuntST	MKean-Maffitt	0.1Hr Initial Runtime Setting
PS35-BarS1-DIniRuntST	MKean-Maffitt	Day Initial Runtime Setting
PS35-BarS1-HIniRuntST	MKean-Maffitt	Hours initial runtime preset
PS35-BarS2-01HIniRuntST	MKean-Maffitt	0.1Hr Initial Runtime Setting
PS35-BarS2-DIniRuntST	MKean-Maffitt	Day Initial Runtime Setting
PS35-BarS2-HIniRuntST	MKean-Maffitt	Hours initial runtime preset
PS35-BtwnCycleAvg	MKean-Maffitt	Average station between pump cycle time
PS35-BtwnCycleMax	MKean-Maffitt	Maximum station between pump cycle time
PS35-BtwnCycleMin	MKean-Maffitt	Minimum station between pump cycle time
PS35-Conv-01HIniRuntST	MKean-Maffitt	Conveyer .1Hr Initial Runtime Setting
PS35-Conv-DIniRuntST	MKean-Maffitt	Conveyer Day Initial Runtime Setting
PS35-Conv-HIniRuntST	MKean-Maffitt	Conveyer hours initial runtime preset
PS35-CycleAvg	MKean-Maffitt	Average station pump cycle time
PS35-CycleMax	MKean-Maffitt	Maximum station pump cycle time
PS35-CycleMin	MKean-Maffitt	Minimum station pump cycle time
PS35-EfflSCA	MKean-Maffitt	Scaled effluent flow
PS35-Fan1-01HIniRuntST	MKean-Maffitt	0.1Hr Initial Runtime Setting
PS35-Fan1-DIniRuntST	MKean-Maffitt	Day Initial Runtime Setting
PS35-Fan1-HIniRuntST	MKean-Maffitt	Hours initial runtime preset
PS35-Fan2-01HIniRuntST	MKean-Maffitt	0.1Hr Initial Runtime Setting
PS35-Fan2-DIniRuntST	MKean-Maffitt	Day Initial Runtime Setting
PS35-Fan2-HIniRuntST	MKean-Maffitt	Hours initial runtime preset
PS35-Gen-01HIniRuntST	MKean-Maffitt	Gen .1Hr Initial Runtime Setting
PS35-Gen-DayTm	MKean-Maffitt	Day of week when the generator starts
PS35-Gen-DIniRuntST	MKean-Maffitt	Gen Day Initial Runtime Setting
PS35-GEN-FTRTm	MKean-Maffitt	Generator FAIL TO RUN timer preset
PS35-GEN-FTSTm	MKean-Maffitt	Generator FAIL TO STOP preset time
PS35-Gen-HIniRuntST	MKean-Maffitt	Gen 1Hr Initial Runtime Setting
PS35-Gen-StpHrTm	MKean-Maffitt	Generator stop time HOUR
PS35-Gen-StpMinTm	MKean-Maffitt	Generator stop time MINUTE
PS35-Gen-StrHrTm	MKean-Maffitt	Generator start timer HOUR
PS35-Gen-StrMinTm	MKean-Maffitt	Generator start time MINUTES
PS35-Gen-WeekTm	MKean-Maffitt	Generator Weeks between Starts
PS35-InflSCA	MKean-Maffitt	Scaled inffluent flow
PS35-MaxAmp	MKean-Maffitt	Max I Value (Amps)
PS35-MaxEfflFlow	MKean-Maffitt	Max Effluent flow
PS35-MaxInflFlow	MKean-Maffitt	Max Influent flow
PS35-MaxVolt	MKean-Maffitt	Max V Value (Volts)
PS35-MaxWW	MKean-Maffitt	Max WW Level Value
PS35-P1-01HIniRuntST	MKean-Maffitt	P1 .1Hr Initial Runtime Setting

City of Wilmington, North Carolina
Pump Station 35 - Monitored Data

Tagname	Group	Description
PS35-P1-DIniRuntST	MKean-Maffitt	P1 Day Initial Runtime Setting
PS35-P1-FTRTm	MKean-Maffitt	P1 FTR Tmr Preset Timer
PS35-P1-FTSTm	MKean-Maffitt	P1 FTS Tmr Preset Time
PS35-P1-HIniRuntST	MKean-Maffitt	P1 1Hr Initial Runtime Setting
PS35-P1-StpDlyTm	MKean-Maffitt	P1 Stp Dly Tmr Preset Time
PS35-P1-StrDlyTm	MKean-Maffitt	P1 Str Dly Tmr Preset Time
PS35-P2-01HIniRuntST	MKean-Maffitt	P2 .1Hr Initial Runtime Setting
PS35-P2-DIniRuntST	MKean-Maffitt	P2 Day Initial Runtime Setting
PS35-P2-FTRTm	MKean-Maffitt	P2 FTR Tmr Preset Time
PS35-P2-FTSTm	MKean-Maffitt	P2 FTS Tmr Preset Time
PS35-P2-HIniRuntST	MKean-Maffitt	P2 1Hr Initial Runtime Setting
PS35-P2-StpDlyTm	MKean-Maffitt	P2 Stp Dly Tmr Preset Time
PS35-P2-StrDlyTm	MKean-Maffitt	P2 Str Dly Tmr Preset Time
PS35-P3-01HIniRuntST	MKean-Maffitt	P3 .1Hr Initial Runtime Setting
PS35-P3-DIniRuntST	MKean-Maffitt	P3 Day Initial Runtime Setting
PS35-P3-FTRTm	MKean-Maffitt	P3 FTR Tmr Preset Time
PS35-P3-FTSTm	MKean-Maffitt	P3 FTS Tmr Preset Time
PS35-P3-HIniRuntST	MKean-Maffitt	P3 1Hr Initial Runtime Setting
PS35-P3-StpDlyTm	MKean-Maffitt	P3 Stp Dly Tmr Preset Time
PS35-P3-StrDlyTm	MKean-Maffitt	P3 Str Dly Tmr Preset Time
PS35-P4-01HIniRuntST	MKean-Maffitt	P4 .1Hr Initial Runtime Setting
PS35-P4-DIniRuntST	MKean-Maffitt	P4 Day Initial Runtime Setting
PS35-P4-FTRTm	MKean-Maffitt	P4 FTR Tmr Preset Time
PS35-P4-FTSTm	MKean-Maffitt	P4 FTS Tmr Preset Time
PS35-P4-HIniRuntST	MKean-Maffitt	P4 1Hr Initial Runtime Setting
PS35-P4-ManSpeedCtl	MKean-Maffitt	Manual Speed Control
PS35-P4-MaxSpeed	MKean-Maffitt	Maximum speed clamp
PS35-P4-MinSpeed	MKean-Maffitt	Minimum speed clamp
PS35-P4-speedSCA	MKean-Maffitt	P4 scaled speed
PS35-P4-StpDlyTm	MKean-Maffitt	P4 Stp Dly Tmr Preset Time
PS35-P4-StrDlyTm	MKean-Maffitt	P4 Str Dly Tmr Preset Time, %R0092
PS35-PhAAmpSCA	MKean-Maffitt	PhA Current Scaled, %R0008
PS35-PhA-BVotSCA	MKean-Maffitt	PhA-B Voltage Scaled, %R0011
PS35-PhA-CVotSCA	MKean-Maffitt	PhA-C Voltage Scaled, %R0013
PS35-PhBAmpSCA	MKean-Maffitt	PhB Current Scaled, %R0009
PS35-PhB-CVotSCA	MKean-Maffitt	PhB-C Voltage Scaled, %R0012
PS35-PhCAmpSCA	MKean-Maffitt	PhC Current Scaled, %R0010
PS35-StpLargeSP	MKean-Maffitt	Stop large pump setpoint
PS35-StpMediumSP	MKean-Maffitt	Stop medium pump setpoint
PS35-StpSmallSP	MKean-Maffitt	Stop small pump setpoint
PS35-StrLargeSP	MKean-Maffitt	Start large pump setpoint
PS35-StrMediumSP	MKean-Maffitt	Start medium pump setpoint
PS35-StrSmallSP	MKean-Maffitt	Start small pump setpoint
PS35-TimSynchHrDy	MKean-Maffitt	Time SynchronizationHour Day,40373
PS35-TimSynchMoYr	MKean-Maffitt	Time SynchronizationMonth Year,40372
PS35-TimSynchScMn	MKean-Maffitt	Time SynchronizationSecond Minute,40374
PS35-WWSCA	MKean-Maffitt	WW Level Scaled
PS35-WWSP	MKean-Maffitt	Wet well level setpoint

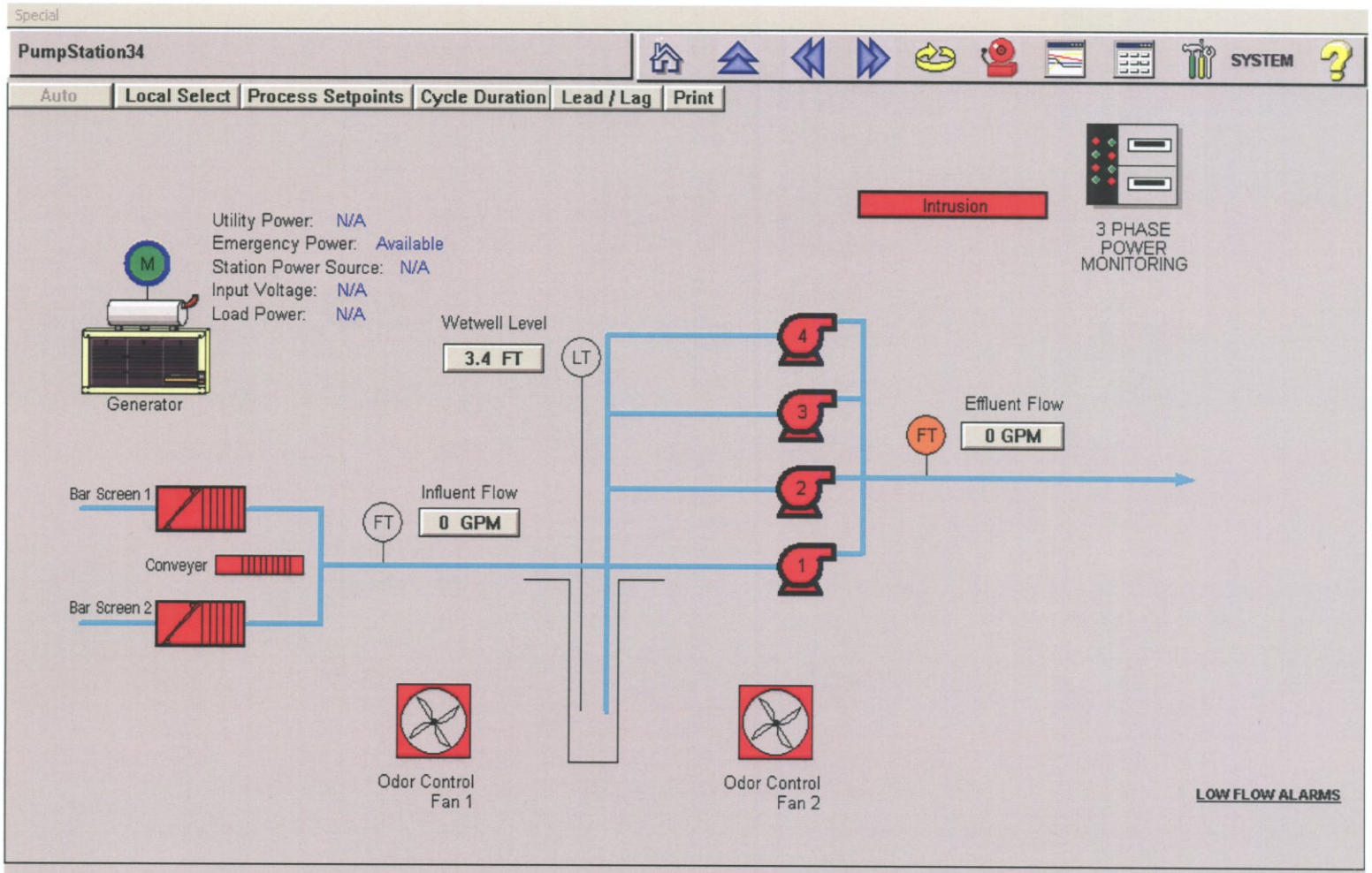

Date	Time	State	Operator	Comment	Name	Group	Value	Limit	Pri...
15 Mar	09:18	UNACK	MMOW1/None	PS34 INTRUSION, ALARM	PS34-XA-016	McKean-Maffitt	ALARM	ALARM	1
15 Mar	18:15	UNACK	MMOW1/None	PS43 Communications	COMMPS43	$System	FAIL	FAIL	1

user: Administrator access level: 9999 GE Team Controls window: Pumpstation34 file: win00176.win 3/15/2006 6:22:28 PM

City of Wilmington, North Carolina
Pump Station 34 - Monitored Data

Tagname	Group	Description
PS34-AutoManu	MKean-Maffitt	Auto/Manual Mode, Auto = 1, %M0016
PS34-AutoRota	MKean-Maffitt	PS34 Pump Auto Rotation Mode
PS34-BarS1-IniRunTm	MKean-Maffitt	PS34 Initialize Run Time
PS34-BarS2-IniRunTm	MKean-Maffitt	PS34 Initialize Run Time
PS34-CabComAlr	MKean-Maffitt	Cabinet Common Alarm
PS34-Conv-IniRunTm	MKean-Maffitt	PS34 Initialize Run Time
PS34-EFBT	MKean-Maffitt	Effluent flow broken X-mtr
PS34-Fan1-IniRunTm	MKean-Maffitt	PS34 Initialize Run Time
PS34-Fan2-IniRunTm	MKean-Maffitt	PS34 Initialize Run Time
PS34-Gen-AutoManu	MKean-Maffitt	PS34 Gen Auto Manu Mode
PS34-GEN-FTS	MKean-Maffitt	Generator FAIL TO STOP flag
PS34-Gen-ManStart	MKean-Maffitt	Manual Generator Start
PS34-Gen-ManStop	MKean-Maffitt	Generator Manual Stop
PS34-Gen-TimeSync	MKean-Maffitt	Generator Scheduler Time Sync bit for PLC
PS34-IFBT	MKean-Maffitt	Inffluent flow broken X-mtr
PS34-IniGenRunTm	MKean-Maffitt	PS34 Initialize Generator Run Time, %M0096
PS34-JA-018	MKean-Maffitt	Loss of cabinet power
PS34-JA-021	MKean-Maffitt	Bubbler pressure low
PS34-LAH-002	MKean-Maffitt	PS34 INFLUENT CHANNEL 1 LEVEL, HIGH
PS34-LAH-003	MKean-Maffitt	PS34 INFLUENT CHANNEL 2 LEVEL, HIGH
PS34-LAH-009	MKean-Maffitt	PS34 WETWELL LEVEL, HIGH
PS34-LAH-015	MKean-Maffitt	PS34 DRYWELL FLOODING, ALARM
PS34-P1-FTR	MKean-Maffitt	Fail to run
PS34-P1-FTS	MKean-Maffitt	Pump 1 FTS
PS34-P1-IniRunTm	MKean-Maffitt	PS34 Initialize Pump 1 Runtime
PS34-P1-ManuSS	MKean-Maffitt	PS34 Manual P1 Str/Stp
PS34-P2-FTR	MKean-Maffitt	Fail to run
PS34-P2-FTS	MKean-Maffitt	Fail to start
PS34-P2-IniRunTm	MKean-Maffitt	Initialize Pump Runtime
PS34-P2-ManuSS	MKean-Maffitt	PS34 Manual P2 Str/Stp
PS34-P3-FTR	MKean-Maffitt	Pump 3 FTR
PS34-P3-FTS	MKean-Maffitt	Pump 3 FTS
PS34-P3-IniRunTm	MKean-Maffitt	PS34 Initialize Pump 3 Runtime
PS34-P3-ManuSS	MKean-Maffitt	PS34 Manual P3 Str/Stp
PS34-P4-FTR	MKean-Maffitt	Pump 4 FTR
PS34-P4-FTS	MKean-Maffitt	Pump 4 FTS
PS34-P4-IniRunTm	MKean-Maffitt	PS34 Initialize Pump 4 Runtime
PS34-P4-ManuSS	MKean-Maffitt	PS34 Manual P4 Str/Stp
PS34-P4-SpeedBT	MKean-Maffitt	PS34 Pump speed Broken X-mtr
PS34-PhaseA-BBT	MKean-Maffitt	PS34 VT PhA-B Broken X-mtr
PS34-PhaseABT	MKean-Maffitt	PS34 CT PhA Broken X-mtr
PS34-PhaseBBT	MKean-Maffitt	PS34 CT PhB Broken X-mtr
PS34-PhaseB-CBT	MKean-Maffitt	PS34 VT PhB-C Broken X-mtr
PS34-PhaseC-ABT	MKean-Maffitt	PS34 VT PhA-C Broken X-mtr
PS34-PhaseCBT	MKean-Maffitt	PS34 CT PhC Broken X-mtr
PS34-PLC-LOC	MKean-Maffitt	PS34 SCADA PLC/Local Select
PS34-SCADALead	MKean-Maffitt	Pump 3 SCADA Lead
PS34-TAH-017	MKean-Maffitt	CABINET HIGH TEMP ALARM
PS34-WWBT	MKean-Maffitt	PS34 Wetwell Level Broken X-mtr
PS34-XA-004	MKean-Maffitt	PS34 BAR SCREEN 1, FAIL
PS34-XA-005	MKean-Maffitt	PS34 BAR SCREEN 2, FAIL

City of Wilmington, North Carolina
Pump Station 34 - Monitored Data

Tagname	Group	Description
PS34-XA-006	MKean-Maffitt	PS34 CONVEYOR, FAIL
PS34-XA-007	MKean-Maffitt	PS34 ODOR CONTROL FAN1, FAIL
PS34-XA-008	MKean-Maffitt	PS34 ODOR CONTROL FAN2, FAIL
PS34-XA-011	MKean-Maffitt	PS34 PUMP 1, FAIL
PS34-XA-012	MKean-Maffitt	PS34 PUMP 2, FAIL
PS34-XA-013	MKean-Maffitt	PS34 PUMP 3, FAIL
PS34-XA-014	MKean-Maffitt	PS34 PUMP 4, FAIL
PS34-XA-016	MKean-Maffitt	PS34 INTRUSION, ALARM
PS34-XA-019	MKean-Maffitt	PS34 GENERATOR, FAIL
PS34-YA-021	MKean-Maffitt	Flowmatcher PLC FAIL
PS34-YI-004	MKean-Maffitt	PS34 BAR SCREEN 1, RUN
PS34-YI-005	MKean-Maffitt	PS34 BAR SCREEN 2, RUN
PS34-YI-006	MKean-Maffitt	PS34 CONVEYOR, RUN
PS34-YI-007	MKean-Maffitt	PS34 ODOR CONTROL FAN1, RUN
PS34-YI-008	MKean-Maffitt	PS34 ODOR CONTROL FAN2, RUN
PS34-YI-011	MKean-Maffitt	PS34 PUMP 1, RUN
PS34-YI-012	MKean-Maffitt	PS34 PUMP 2, RUN
PS34-YI-013	MKean-Maffitt	PS34 PUMP 3, RUN
PS34-YI-014	MKean-Maffitt	PS34 PUMP 4, RUN
PS34-YI-019	MKean-Maffitt	PS34 GENERATOR, RUN
PS34-YI-020A	MKean-Maffitt	PS34 ATS, STAND-BY
PS34-YN-017	MKean-Maffitt	PS34 CONTROL, PLC
PS34-BarS1-01HCurCnt	MKean-Maffitt	0.1Hours Cntr Current Count
PS34-BarS1-DCurCnt	MKean-Maffitt	Days Cntr Current Count
PS34-BarS1-HCurCnt	MKean-Maffitt	Hours Cntr Current Count
PS34-BarS2-01HCurCnt	MKean-Maffitt	0.1Hours Cntr Current Count
PS34-BarS2-DCurCnt	MKean-Maffitt	Days Cntr Current Count
PS34-BarS2-HCurCnt	MKean-Maffitt	Hours Cntr Current Count
PS34-Conv-01HCurCnt	MKean-Maffitt	Conveyer .1Hours Cntr Current Count
PS34-Conv-DCurCnt	MKean-Maffitt	Conveyer Days Cntr Current Count
PS34-Conv-HCurCnt	MKean-Maffitt	Conveyer Hours Cntr Current Count
PS34-Fan1-01HCurCnt	MKean-Maffitt	0.1Hours Cntr Current Count
PS34-Fan1-DCurCnt	MKean-Maffitt	Days Cntr Current Count
PS34-Fan1-HCurCnt	MKean-Maffitt	Hours Cntr Current Count
PS34-Fan2-01HCurCnt	MKean-Maffitt	0.1Hours Cntr Current Count
PS34-Fan2-DCurCnt	MKean-Maffitt	Days Cntr Current Count
PS34-Fan2-HCurCnt	MKean-Maffitt	Hours Cntr Current Count
PS34-Gen-01HCurCnt	MKean-Maffitt	Gen .1Hours Cntr Current Count
PS34-Gen-DCurCnt	MKean-Maffitt	Gen Days Cntr Current Count
PS34-Gen-HCurCnt	MKean-Maffitt	Gen Hours Cntr Current Count
PS34-P1-01HCurCnt	MKean-Maffitt	P1 .1Hours Cntr Current Count
PS34-P1-DCurCnt	MKean-Maffitt	P1 Days Cntr Current Count
PS34-P1-HCurCnt	MKean-Maffitt	P1 Hours Cntr Current Count
PS34-P2-01HCurCnt	MKean-Maffitt	P2 .1Hours Cntr Current Count
PS34-P2-DCurCnt	MKean-Maffitt	P2 Days Cntr Current Count
PS34-P2-HCurCnt	MKean-Maffitt	P2 Hours Cntr Current Count
PS34-P3-01HCurCnt	MKean-Maffitt	P3 .1Hours Cntr Current Count
PS34-P3-DCurCnt	MKean-Maffitt	P3 Days Cntr Current Count
PS34-P3-HCurCnt	MKean-Maffitt	P3 Hours Cntr Current Count
PS34-P4-01HCurCnt	MKean-Maffitt	P4 .1Hours Cntr Current Count
PS34-P4-DCurCnt	MKean-Maffitt	P4 Days Cntr Current Count

City of Wilmington, North Carolina
Pump Station 34 - Monitored Data

Tagname	Group	Description
PS34-P4-HCurCnt	MKean-Maffitt	P4 Hours Cntr Current Count
PS34-BarS1-TmpIniRuntST	MKean-Maffitt	Indirect temporary storage of fan runtime
PS34-BarS2-TmpIniRuntST	MKean-Maffitt	Indirect temporary storage of fan runtime
PS34-Conv-TmpIniRuntST	MKean-Maffitt	Indirect temporary storage of conveyer runtime
PS34-Fan1-TmpIniRuntST	MKean-Maffitt	Indirect temporary storage of fan runtime
PS34-Fan2-TmpIniRuntST	MKean-Maffitt	Indirect temporary storage of fan runtime
PS34-Gen-TmpIniRuntST	MKean-Maffitt	PS34 Gen Temp Initial Runtime Setting
PS34-P1-TmpIniRuntST	MKean-Maffitt	PS34 P1 Temp Initial Runtime Setting
PS34-P2-TmpIniRuntST	MKean-Maffitt	PS34 P2 Temp Initial Runtime Setting
PS34-P3-TmpIniRuntST	MKean-Maffitt	PS34 P3 Temp Initial Runtime Setting
PS34-P4-TmpIniRuntST	MKean-Maffitt	PS34 P4 Temp Initial Runtime Setting
PS34-PmpNo	MKean-Maffitt	Pump No.
PS34-1&2pumpAmpSP	MKean-Maffitt	Max I Value (Amps) for 2 pumps running
PS34-1or2pumpAmpSP	MKean-Maffitt	Max I Value (Amps) for 1 pump running
PS34-3pumpAmpSP	MKean-Maffitt	Max I Value (Amps) for 3 pumps running
PS34-4pumpAmpSP	MKean-Maffitt	Max I Value (Amps) for 4 pumps running
PS34-BarS1-01HIniRuntST	MKean-Maffitt	0.1Hr Initial Runtime Setting
PS34-BarS1-DIniRuntST	MKean-Maffitt	Day Initial Runtime Setting
PS34-BarS1-HIniRuntST	MKean-Maffitt	Hours initial runtime preset
PS34-BarS2-01HIniRuntST	MKean-Maffitt	0.1Hr Initial Runtime Setting
PS34-BarS2-DIniRuntST	MKean-Maffitt	Day Initial Runtime Setting
PS34-BarS2-HIniRuntST	MKean-Maffitt	Hours initial runtime preset
PS34-BtwnCycleAvg	MKean-Maffitt	Average station between pump cycle time
PS34-BtwnCycleMax	MKean-Maffitt	Maximum station between pump cycle time
PS34-BtwnCycleMin	MKean-Maffitt	Minimum station between pump cycle time
PS34-Conv-01HIniRuntST	MKean-Maffitt	Conveyer .1Hr Initial Runtime Setting
PS34-Conv-DIniRuntST	MKean-Maffitt	Conveyer Day Initial Runtime Setting
PS34-Conv-HIniRuntST	MKean-Maffitt	Conveyer hours initial runtime preset
PS34-CycleAvg	MKean-Maffitt	Average station pump cycle time
PS34-CycleMax	MKean-Maffitt	Maximum station pump cycle time
PS34-CycleMin	MKean-Maffitt	Minimum station pump cycle time
PS34-EfflSCA	MKean-Maffitt	Scaled effluent flow
PS34-Fan1-01HIniRuntST	MKean-Maffitt	0.1Hr Initial Runtime Setting
PS34-Fan1-DIniRuntST	MKean-Maffitt	Day Initial Runtime Setting
PS34-Fan1-HIniRuntST	MKean-Maffitt	Hours initial runtime preset
PS34-Fan2-01HIniRuntST	MKean-Maffitt	0.1Hr Initial Runtime Setting
PS34-Fan2-DIniRuntST	MKean-Maffitt	Day Initial Runtime Setting
PS34-Fan2-HIniRuntST	MKean-Maffitt	Hours initial runtime preset
PS34-Gen-01HIniRuntST	MKean-Maffitt	Gen .1Hr Initial Runtime Setting
PS34-Gen-DayTm	MKean-Maffitt	Day of week when the generator starts
PS34-Gen-DIniRuntST	MKean-Maffitt	Gen Day Initial Runtime Setting
PS34-GEN-FTRTm	MKean-Maffitt	Generator FAIL TO RUN timer preset
PS34-GEN-FTSTm	MKean-Maffitt	Generator FAIL TO STOP preset time
PS34-Gen-HIniRuntST	MKean-Maffitt	Gen 1Hr Initial Runtime Setting
PS34-Gen-StpHrTm	MKean-Maffitt	Generator stop time HOUR
PS34-Gen-StpMinTm	MKean-Maffitt	Generator stop time MINUTE
PS34-Gen-StrHrTm	MKean-Maffitt	Generator start timer HOUR
PS34-Gen-StrMinTm	MKean-Maffitt	Generator start time MINUTES
PS34-Gen-WeekTm	MKean-Maffitt	Generator Weeks between Starts
PS34-InflSCA	MKean-Maffitt	Scaled inffluent flow
PS34-MaxAmp	MKean-Maffitt	Max I Value (Amps)

City of Wilmington, North Carolina
Pump Station 34 - Monitored Data

Tagname	Group	Description
PS34-MaxEfflFlow	MKean-Maffitt	Max Effluent flow
PS34-MaxInflFlow	MKean-Maffitt	Max Influent flow
PS34-MaxVolt	MKean-Maffitt	Max V Value (Volts)
PS34-MaxWW	MKean-Maffitt	Max WW Level Value
PS34-P1-01HIniRuntST	MKean-Maffitt	P1 .1Hr Initial Runtime Setting
PS34-P1-DIniRuntST	MKean-Maffitt	P1 Day Initial Runtime Setting
PS34-P1-FTRTm	MKean-Maffitt	P1 FTR Tmr Preset Timer
PS34-P1-FTSTm	MKean-Maffitt	P1 FTS Tmr Preset Time
PS34-P1-HIniRuntST	MKean-Maffitt	P1 1Hr Initial Runtime Setting
PS34-P1-StpDlyTm	MKean-Maffitt	P1 Stp Dly Tmr Preset Time
PS34-P1-StrDlyTm	MKean-Maffitt	P1 Str Dly Tmr Preset Time
PS34-P2-01HIniRuntST	MKean-Maffitt	P2 .1Hr Initial Runtime Setting
PS34-P2-DIniRuntST	MKean-Maffitt	P2 Day Initial Runtime Setting
PS34-P2-FTRTm	MKean-Maffitt	P2 FTR Tmr Preset Time
PS34-P2-FTSTm	MKean-Maffitt	P2 FTS Tmr Preset Time
PS34-P2-HIniRuntST	MKean-Maffitt	P2 1Hr Initial Runtime Setting
PS34-P2-StpDlyTm	MKean-Maffitt	P2 Stp Dly Tmr Preset Time
PS34-P2-StrDlyTm	MKean-Maffitt	P2 Str Dly Tmr Preset Time
PS34-P3-01HIniRuntST	MKean-Maffitt	P3 .1Hr Initial Runtime Setting
PS34-P3-DIniRuntST	MKean-Maffitt	P3 Day Initial Runtime Setting
PS34-P3-FTRTm	MKean-Maffitt	P3 FTR Tmr Preset Time
PS34-P3-FTSTm	MKean-Maffitt	P3 FTS Tmr Preset Time
PS34-P3-HIniRuntST	MKean-Maffitt	P3 1Hr Initial Runtime Setting
PS34-P3-StpDlyTm	MKean-Maffitt	P3 Stp Dly Tmr Preset Time
PS34-P3-StrDlyTm	MKean-Maffitt	P3 Str Dly Tmr Preset Time
PS34-P4-01HIniRuntST	MKean-Maffitt	P4 .1Hr Initial Runtime Setting
PS34-P4-DIniRuntST	MKean-Maffitt	P4 Day Initial Runtime Setting
PS34-P4-FTRTm	MKean-Maffitt	P4 FTR Tmr Preset Time
PS34-P4-FTSTm	MKean-Maffitt	P4 FTS Tmr Preset Time
PS34-P4-HIniRuntST	MKean-Maffitt	P4 1Hr Initial Runtime Setting
PS34-P4-ManSpeedCtl	MKean-Maffitt	Manual Speed Control
PS34-P4-MaxSpeed	MKean-Maffitt	Maximum speed clamp
PS34-P4-MinSpeed	MKean-Maffitt	Minimum speed clamp
PS34-P4-PID-Bias	MKean-Maffitt	PID bias
PS34-P4-PID-DbandMinus	MKean-Maffitt	deaband -
PS34-P4-PID-DbandPlus	MKean-Maffitt	deadband +
PS34-P4-PID-Derivative	MKean-Maffitt	PID Derivative
PS34-P4-PID-Gain	MKean-Maffitt	PID Proportional Gain
PS34-P4-PID-InteRate	MKean-Maffitt	PID Integral rate
PS34-P4-PID-MinSlewTm	MKean-Maffitt	PID minimum slew
PS34-P4-PID-Output	MKean-Maffitt	PID speed output
PS34-P4-PID-SampleTime	MKean-Maffitt	PID sample time
PS34-P4-speedSCA	MKean-Maffitt	P4 scaled speed
PS34-P4-StpDlyTm	MKean-Maffitt	P4 Stp Dly Tmr Preset Time
PS34-P4-StrDlyTm	MKean-Maffitt	P4 Str Dly Tmr Preset Time, %R0092
PS34-PhAAmpSCA	MKean-Maffitt	PhA Current Scaled, %R0008
PS34-PhA-BVotSCA	MKean-Maffitt	PhA-B Voltage Scaled, %R0011
PS34-PhA-CVotSCA	MKean-Maffitt	PhA-C Voltage Scaled, %R0013
PS34-PhBAmpSCA	MKean-Maffitt	PhB Current Scaled, %R0009
PS34-PhB-CVotSCA	MKean-Maffitt	PhB-C Voltage Scaled, %R0012
PS34-PhCAmpSCA	MKean-Maffitt	PhC Current Scaled, %R0010

City of Wilmington, North Carolina
Pump Station 34 - Monitored Data

Tagname	Group	Description
PS34-StpLargeSP	MKean-Maffitt	Stop large pump setpoint
PS34-StpMediumSP	MKean-Maffitt	Stop medium pump setpoint
PS34-StpSmallSP	MKean-Maffitt	Stop small pump setpoint
PS34-StrLargeSP	MKean-Maffitt	Start large pump setpoint
PS34-StrMediumSP	MKean-Maffitt	Start medium pump setpoint
PS34-StrSmallSP	MKean-Maffitt	Start small pump setpoint
PS34-TimSynchHrDy	MKean-Maffitt	Time SynchronizationHour Day,40373
PS34-TimSynchMoYr	MKean-Maffitt	Time SynchronizationMonth Year,40372
PS34-TimSynchScMn	MKean-Maffitt	Time SynchronizationSecond Minute,40374
PS34-WWSCA	MKean-Maffitt	WW Level Scaled
PS34-WWSP	MKean-Maffitt	Wet well level setpoint

APPENDIX J

Sample Easement Encroachment Application Forms

Agreement to Landscape in City Easement

Name of Owner: _____

Name of Development: _____

Address of Development: _____

Plat Book _____ Page _____ Lot_____.

Easement: Sanitary Sewer _____ Water _____ Utility & Drainage_____

Location of Easement: _____

The Owner hereby requests permission to place landscaping in the above referenced dedicated easement. Owner acknowledges that any permission given by City to Owner to plant landscaping in a dedicated easement does not waive or modify the City of Wilmington's rights as the easement holder. Owner understands and agrees that the City of Wilmington or its authorized contractor may at any time and for any reason perform work within the dedicated easement and that the City shall have no liability to Owner for any damage to landscaping in the easement. Owner may be held responsible for the removal of the landscaping to enable work to be done by City. Owner shall be solely responsible for any costs incurred in repairing or replacing the landscaping. Owner understands that the City of Wilmington reserves the right to limit or to totally withdraw this permission to place landscaping within a dedicated easement if such landscaping is impairing drainage, or interfering with the City's use of the easement, or for any other appropriate reason. If this permission is withdrawn, Owner will be responsible for finding an alternative location for any landscaping required under the City of Wilmington's Zoning Ordinance. Owner shall inform any successor Owner of the terms and conditions of this Agreement.

_____

Owner's Signature Date

The City of Wilmington hereby grants _____ permission to plant landscaping within its easement at this location subject to these terms and conditions.

CITY OF WILMINGTON

By: _____ By: _____

Title: _____ Title: _____

Date: _____ Date: _____

For a water or sanitary sewer easement, this Agreement must be signed by the Public Utilities Director or designee. For a drainage easement, this Agreement must be signed by the City Engineer.

Agreement for a Sign in City Easement

Name of Owner: _____

Name of Development: _____

Address of Development: _____

Plat Book _____ Page _____ Lot_____.

Easement: Sanitary Sewer _____ Water _____ Utility & Drainage_____

Location of Easement: _____

The owner hereby requests permission to place a sign in the above referenced dedicated easement. Owner understands and agrees that the City of Wilmington may limit the size and height of the sign as a condition of giving permission to place a sign within a dedicated easement. Owner acknowledges that any permission given by City to Owner to place a sign in a dedicated easement does not waive or modify the City of Wilmington's rights as the easement holder. Owner understands and agrees that the City of Wilmington, or its authorized contractor, may at any time and for any reason perform work within the dedicated easement and that the City shall have no liability to Owner for any damage to the sign in the easement. Owner may be held responsible for the removal of the sign to enable work to be done by City. Owner shall be solely responsible for any costs incurred in repairing or replacing the sign. Owner understands that the City of Wilmington reserves the right to limit or to totally withdraw this permission to place a sign within a dedicated easement if such sign is impairing drainage, or interfering with the City's use of the easement, or for any other appropriate reason. If this permission is withdrawn, Owner will be responsible for finding an alternate location for the sign which complies with the City of Wilmington's ordinances. Owner shall inform any successor Owner of the terms and conditions of this Agreement.

_____

Owner's Signature Date

The City of Wilmington hereby grants _____ permission to place a sign _____ ft. in height, _____ square feet in area, withing its easement at this location subject to these terms and conditions.

CITY OF WILMINGTON

By: _____ By: _____

Title: _____ Title: _____

Date: _____ Date: _____

For a water or sanitary sewer easement, this Agreement must be signed by the Public Utilities Director or designee. For a drainage easement, this Agreement must be signed by the City Engineer.

Agreement for Fencing in City Easement

Name of Owner: _____

Name of Development: _____

Address of Development: _____

Plat Book _____ Page _____ Lot_____.

Easement: Sanitary Sewer _____ Water _____ Utility & Drainage_____

Location of Easement: _____

The Owner hereby requests permission to place a fence in the above referenced dedicated easement. Owner acknowledges that any permission given by City to Owner to place a fence in a dedicated easement does not waive or modify the City of Wilmington's rights as the easement holder. Owner understands and agrees that the City of Wilmington or its authorized contractor may at any time and for any reason perform work within the dedicated easement and that the City shall have no liability to Owner for any damage to the fence in the easement. Owner may be held responsible for the removal of the fence to enable work to be done by City. Owner shall be solely responsible for any costs incurred in repairing or replacing the fence. Owner understands that the City of Wilmington reserves the right to limit or to totally withdraw this permission to place a fence within a dedicated easement if such fence is impairing drainage, or interfering with the City's use of the easement, or for any other appropriate reason. If this permission is withdrawn, Owner will be responsible for finding an alternative location for the fence required under the City of Wilmington's Zoning Ordinance. Owner shall inform any successor Owner of the terms and conditions of this Agreement.

_____

Owner's Signature Date

The City of Wilmington hereby grants _____ permission to place a fence within its easement at this location subject to these terms and conditions.

CITY OF WILMINGTON

By: _____ By: _____

Title: _____ Title: _____

Date: _____ Date: _____

For a water or sanitary sewer easement, this Agreement must be signed by the Public Utilities Director or designee. For a drainage easement, this Agreement must be signed by the City Engineer.