WILMINGTON
North Carolina

TECHNICAL STANDARDS
AND
SPECIFICATIONS MANUAL

March 2007

PREFACE

This manual was prepared in the office of the City Engineer. The manual contains specific technical information related to the construction of infrastructure improvements which are required to be built to the City of Wilmington, NC standards and specifications.

COPIES

Additional copies of the document can be obtained at the City Engineer's office located at 305 Chestnut Street, by contacting the offices with written request, PO Box 1810, Wilmington, NC 28402, or by phone (910) 341-7807.

This update, completed in March 2007, supersedes all previous printings of this document. Copies prepared or dated prior to March 2007 should be discarded.

TABLE OF CONTENTS

TECHNICAL STANDARDS AND SPECIFICATIONS MANUAL

TABLE OF CONTENTS

Chapter		Page
I.	Introduction	1-1
II.	General Requirements	2-1
III.	Water	3-1
IV.	Sanitary Sewer	4-1
V.	Stormwater Management	5-1
VI.	Landscaping	6-1
VII.	Traffic Engineering	7-1
VIII.	Public Transportation System	8-1
IX.	Sanitation	9-1
	Index	A-1
	Document Revisions	B-1

I

INTRODUCTION

TABLE OF CONTENTS

SECTION		PAGE
A.	GENERAL INFORMATION	1-1
B.	JURISDICTION	1-1
C.	VARIANCE OR MODIFICATION	1-1
D.	AMENDMENT AND ADOPTION PROCEDURE	1-1

A. GENERAL INFORMATION

The materials, design and construction specifications and standards contained within this manual are established as the minimum improvement specifications and standards for the City of Wilmington. These specifications and standards have been compiled by the various technical agencies of the City of Wilmington and New Hanover County upon sufficient studies of the existing problems, improvement standards within other areas of the State, and applicable enabling legislation of the State, and have been determined to be reasonable improvement specifications and standards applicable to the City of Wilmington. All construction methods and material not specified within this manual shall conform with the current "North Carolina Department of Transportation Standard Specifications for Roads and Structures".

B. JURISDICTION

On and after September 11, 1979, the specifications and standards contained herein shall be applicable to all new improvements and alterations in existing improvements lying within the regulatory jurisdiction of the City of Wilmington.

C. VARIANCE OR MODIFICATION

All proposed variances to the specifications and standards contained herein shall be subject to the provisions of Section 18-348 of the City Subdivision Regulations. Any alternate designs, construction methods, and materials, not specifically prescribed herein, shall be subject to Section 18-399 of the City Subdivision Regulations.

D. AMENDMENT AND ADOPTION PROCEDURES

The City Manager or his/her designee may make amendments to the standards and specifications contained herein, provided that such amendments, in his/her judgment, are of a minor nature and do not alter significantly the intent as originally adopted. The City Council, by resolution, shall have the right to repeal or alter any amendment so made by the City Manager or his/her designee. Any other amendments to these standards and specifications shall only be made by resolution adopted by the City Council following review of the proposed amendment by the Subdivision Review Board. Such resolution shall set forth the revised standards and specifications or may amend the standards and specifications by incorporating by reference any document or set of standards. Any document or set of standards so adopted by reference shall be in force from and after the date it is filed in the office of the City Clerk.

CHAPTER II

GENERAL REQUIREMENTS

II

GENERAL REQUIREMENTS

TABLE OF CONTENTS

SECTION		PAGE
A.	DEFINITIONS	2-1
B.	EXCAVATION, GRADING & BACKFILLING	2-2
C.	CONCRETE	2-6
D.	CURB	2-8
E.	SIDEWALK, DRIVEWAYS, WHEELCHAIR RAMPS & RAILROAD CROSSINGS	2-8
F.	BASE COURSE MATERIALS	2-10
G.	ASPHALT PAVING	2-12
H.	MATERIALS	2-14
I.	TESTING	2-25
STANDARD DETAILS		2-28

A. DEFINITIONS

1. A.S.A. - American Standards Association..

2. A.S.T.M. - American Society for Testing Materials.

3. A.W.S. - American Welding Society.

4. A.W.W.A. - American Water Works Association.

5. A.A.S.H.T.O. - American Association of State Highway and Transportation Officials.

6. City - The word City in these specifications refers to the City of Wilmington, North Carolina.

7. City Council or Council - The word Council, or City Council, refers to the City Council, the governing body of the City of Wilmington, North Carolina.

8. Drawings - All drawings, or reproductions thereof, pertaining to the construction of the work, which are approved by the Engineer for such purpose.

9. Engineer - The word Engineer, as used in these specifications, refers to the City Engineer or his or her properly authorized assistants.

10. F.S. - Federal specifications.

11. N.C.D.O.T. & H.S. or N.C.D.O.T. & H.S.. Specifications - North Carolina Department of Transportation and Highway Safety and their "Standard Specifications of Roads and Structures", latest edition.

12. Standard Details - The Standard Detail drawings, or reproductions thereof, which pertain to the standard method of construction of the work, and which are approved by the Engineer.

13. Phrases - Wherever, in the specifications, or upon the drawings, the words "As required", "As permitted," or words of like import are used, it shall be understood that the direction, requirements or permission of the Engineer is intended; and similarly, the words "approved", "acceptable" and "satisfactory", or words of like import, shall mean approved, acceptable or satisfactory to the Engineer.

NOTE: The above terms and definitions apply in all chapters of these specifications.

B. EXCAVATION, GRADING AND BACKFILLING

Care will be exercised to prevent undercut lower than the required subgrades.

Where existing grades require the use of fill to reach the required section elevation, suitable spoil material shall be used. Such spoil material shall be free from debris, roots, trash, stones or other harmful substance, and shall be placed in successive layers of loose material not more than six (6) inches in depth. Each layer shall be spread uniformly by the use of a road machine or other approved device and rolled with an approved tamping machine until thoroughly compacted to ninety-five (95) percent of maximum density obtained at optimum moisture content, as determined by the ASTM D 698 Standard Proctor Test Method.

When any portion of the embankment is constructed on an old road bed, the existing surface shall have be scarified and manipulated in order that, when compacted, it shall have a uniform density, as specified above.

Any undercutting shall be replaced and compacted, as specified above. If the material, after excavation to subgrade, is found to be soft, spongy or unfit for use as subgrade, such unsuitable material shall be removed to a depth as directed by the Engineer and the subgrade shall be bought to proper elevation by filling with suitable spoil. The material for backfilling shall be free from all perishable and objectionable materials, such as debris, roots, trash, stones, or other harmful substance, and shall be approved by the Engineer.

If insufficient quantities of suitable spoil material are generated by grading operations, then select backfill material, approved by the Engineer, shall be used.

The Developer and Contractor are responsible for complying with all Federal, State, and local laws, including but not limited to OSHA regulation.

1. Grading and Sloping Banks

Where it is necessary to terrace or slope banks, all terracing or sloping shall be done behind the property line. In grading these banks a maximum slope of three (3) to one (1) will be held.

In the event that fill is required at the property line, this fill will be extended level with the top of the sidewalks (or level with the final grade at the property line where sidewalk is not installed) at least one (1) foot behind the property line and then carried on a maximum of three (3) to one (1) slope back on the property until it intersects the property grade.

Sloping in either cut or fill sections shall be accomplished on straight grades as near as possible and fine grading and cleaning shall be done with a hand rake. This surface shall be prepared in such a manner that it is ready for fertilizing and seeding when completed.

2. **Excavation and Backfilling for Water Mains, Sanitary Sewer and Storm Drains**
Excavation of trenches for all pipe lines shall be done to established lines and grades. The bedding surface shall provide a firm foundation of uniform density through the entire length of the pipe. Recesses shall be excavated to accommodate bells and joints. Class "C" shaped bottom bedding shall be used. Where unstable soil conditions are encountered as determined by the Engineer, adequate stone bedding material of minimum thickness of six-inch (6-inch) thickness shall be used. **Ref**. SD 1-07 of this chapter.

3. **Undercutting**
Any undercutting in good soil shall be replaced and the replacement material shall be compacted to ninety-five (95) percent of maximum density obtained at optimum moisture content, as determined by the ASTM D 698 Standard Proctor Test Method. In the event that material encountered at pipe grade is found to be soft, spongy, or in any other way unfit, the contractor shall notify the City of Wilmington Engineering Department immediately. Such unsuitable material shall be removed to a depth as specified by the Engineer and replaced with a minimum of six (6) inch stone.

4. **Backfill**
Before backfilling is commenced over pipes and installations, earth fill shall be solidly tamped around and above the pipe to a depth of one (1) foot above the top of the pipe. Care shall be taken to prevent any disturbance to the pipe or damage to newly made joints. The filling of the trench shall be carried out simultaneously on both sides of the pipes in such a manner that injurious side pressures do not occur.

The material for backfilling shall be free from all perishable and objectionable materials. Before placing any backfill, all rubbish, form, blocks, wires or other unsuitable material shall be removed from excavation. The back-filling shall be placed in layers not over six (6) inches thick and compacted to a minimum density of ninety-five (95) percent of the maximum dry density as determined by the Modified Proctor Compaction Test.

5. **Cut-Back of Pavement Required**
When pipe lines are placed under existing pavements, a cutback of the pavement of twelve (12) inches will be required on each side of the ditch line. (See Standard Detail SD 1-05 in this chapter). After the pipe line has been laid and backfilled, an eight (8) inch compacted base of marl-type rock shall be placed over the total width of the pavement cut. After compaction of this base, two (2) inches of bituminous concrete, Type I, shall then be applied in such a manner as to, when rolled, match

the grade of existing pavement. Pavement repair sections on State maintained roads shall conform to NCDOT requirements.

6. Grading and Preparation of Subgrades

a. Asphalt Pavement

After all excavation, undercutting and backfilling have been completed, the subgrade shall be properly shaped and compacted. The area to be compacted shall include all areas beneath pavement and curb and shall extend at least one (1) foot behind the back of the curb. The degree of compaction of the top six (6) inches over this entire area shall be at least ninety-five (95) percent of that obtained by compacting a sample of the soil or material with the equipment and in the manner by the Standard Proctor Method and shall be brought to a firm, unyielding condition before any base course, surface course or pavement is placed thereon.

All soft and yielding material, or any other unsuitable materials in the subgrade which will not readily compact shall be removed and replaced with suitable material which shall then be thoroughly compacted. All roots, stumps and other perishable matter encountered in the preparation of the subgrade shall be removed to a depth of not less than two (2) feet below the surface of the pavement. Any portion of the subgrade inaccessible to the roller or rolling equipment shall be thoroughly compacted with hand or mechanical tampers.

b. Curb and Gutter

The subgrade shall be constructed true to grade and cross sections. The subgrade shall be of materials equal in bearing quality to the subgrade under the adjacent roadway or street and shall be placed and compacted to conform with applicable requirements of the above paragraph. All roots, stumps and other perishable matter encountered at the subgrade shall be removed to a depth of not less than four (4) inches below the subgrade and undercut, filled and compacted with select material.

Excavation to an elevation slightly above finished subgrade shall be completed prior to setting of forms. The subgrade shall be maintained in a smooth, compacted condition, in conformity with the required section and established grade until the concrete is in place. The subgrade shall be wet down sufficiently in advance of the placing of the concrete to insure a firm and moist condition. In cold weather, the subgrade shall be so treated, protected and prepared as to produce a satisfactory subgrade entirely free from frost when the concrete is deposited.

c. Sidewalk and Driveways

The subgrade shall be constructed true to grade and cross sections. In areas where sidewalks or driveways are to be poured, the following conditions will be observed relating to compaction of the subgrade:

(1) Where good firm material (original material, not fill) has been carefully graded, so that no undercutting has occurred, this material shall be considered acceptable subgrade.

(2) Where fill material has been placed, where undercutting has occurred, or where loose or unsuitable material is encountered, such fill or loose material shall be compacted to ninety-five (95) percent or maximum density obtained at optimum moisture content, as determined by the Modified Proctor Compaction Test Method.

(3) Where roots, stumps or other perishable matter is encountered at the subgrade, they shall be removed to a depth of four (4) inches below the subgrade.

(4) In cold weather, the subgrade shall be so treated, protected and prepared as to produce and provide a satisfactory subgrade entirely free from frost when concrete is deposited.

(5) All subgrades shall be graded and protected so as to prevent an accumulation of standing water, and consequent subgrade saturation, in the event of rain.

d. <u>Backfill of Curb and Gutter and Sidewalks</u>

Immediately after the removal of forms for curb and gutter, sidewalks and driveways, the space between the back of the curb and sidewalks shall be backfilled, smoothed off and maintained so as to prevent the accumulation of standing water.

e. <u>Tree Removal</u>

Trees within rights-of-way which are in conflict with required improvements, including trees with root systems that are substantially damaged, shall be removed. The designer shall be required to make reasonable efforts to save regulated trees. Regulated trees are defined as hardwood trees, eight (8) inches or larger in diameter; pine trees, twelve (12) inches or larger in diameter; and flowering trees, four (4) inches or larger in diameter. All trees shall be measured four (4) feet above ground elevation.

All projects shall be required to obtain a Tree Preservation Permit from the City prior to beginning any site improvements.

f. <u>Clearing and Grubbing</u>

The street right-of-way lines and any drainage or utility easements shall constitute the clearing and grubbing limits, provided that regulated trees not in conflict with required improvements shall be saved.

Clearing shall consist in the felling and satisfactory disposal of the trees and other vegetation.

g. Grubbing

Grubbing shall consist of the removal of all stumps and roots having a diameter of three (3) inches or larger to a depth of at least three (3) feet below the subgrade.

C. CONCRETE

All concrete work performed during cold weather shall conform with ACI-306R. In general, no concrete shall be placed when the ambient temperature is forty (40) degrees Fahrenheit, or below. Concrete shall not be deposited on frosted or frozen subgrade.

Concrete shall be placed so as to avoid segregation of the materials and shall not be dropped a distance of more than five (5) feet.

1. Finishing and Curing of Concrete

a. Finishing

Concrete for curb, curb and gutter, sidewalks and driveways shall have a broomed finish. This finish shall be accomplished as follows: the surface shall be screeded and tamped to force the course aggregate away from the surface, floated to bring the surface to the required finish level, steel-troweling to an even smooth surface and brooming with a fibre-bristle brush. The surface shall be of uniform texture.

b. Curing

Curing shall be accomplished by preventing loss of moisture, rapid temperature change and mechanical injury or injury from rain or flowing water for a period of seven (7) days when normal Portland cement has been used or three (3) days when high-early-strength Portland cement has been used. Curing shall be started as soon after placing and finishing as free water has disappeared from the surface of the concrete. Curing may be accomplished by the following method:

1. Membrane-Curing Method

The entire exposed surface shall be covered with an approved pigmented membrane-forming curing compound. The curing compound shall be applied in two (2) coats by hand-operated pressure sprayers at a coverage of approximately two hundred (200) square feet per gallon for both coats. The second coat shall be applied in a direction approximately at right angles to the direction of application of the first coat. The compound shall form a uniform, continuous, coherent film that will not check, crack or peel and shall be free from pinholes or other imperfections. Concrete surfaces to which membrane-curing compounds have been applied shall be adequately protected for seven (7) days from pedestrian and vehicular traffic and from any other action which might disrupt the continuity of the membrane.

c. <u>Sampling and Testing</u>

All sampling, curing and testing of concrete shall be in accordance with ASTM and ACI Standards, latest revisions. When the Engineer directs that the concrete be tested, not less than three (3) cylinders shall be taken at any one time. Unless otherwise directed by the Engineer, a minimum of one cylinder shall be taken for breaking in seven (7) days and a minimum of two (2) cylinders for breaking at twenty-eight (28) days from each batch. The concrete required for testing shall be considered incidental to the project and provided at no cost to the City.

TABLE I

RECOMMENDED PROPORTIONS OF AGGREGATE

Maximum Size of Course Aggregate - Inches	Ratio of Fine (*) to Total Aggregate on Basis of Dry, Compacted Volumes, Measured Separately	
	Minimum	Maximum
3/8	0.55	0.70
3/4	0.40	0.60
1 and Over	0.30	0.50

(*) NOTE: The finer the sand, the lower will be the percentage required.

TABLE II

CONCRETE PROPORTIONS AND STRENGTH REQUIREMENTS

Concrete Classification	Type of Construction	Max. Water Gals. Per Bag Cement	Min. Cement Bags Per 1 Cu. Yd. Concrete	Min. Comp. Strength, Lbs. Per Sq. In. At Age 28 Days
AA	Reinforced Piles, Thin Walls, Light Structural Members	5-1/2	6-3/4	4000
A	Reinforced Retaining Walls, Sewers, Sidewalks, Driveways, Curbs, Retaining Walls not Reinforced, and Cradles for Sewers	6-3/4	5-3/4	3000

D. CURB

Concrete for curb shall be Class "A", three thousand (3,000) PSI concrete.

The alignment and grade of the curb shall be established by means of off-set stakes.

1. Forms

Steel forms shall be used for the construction of curb. They shall be set true to alignment and grade and substantially braced. Metal templates, not more than three-sixteenth (3/16) inch in thickness, and manufactured in accordance with the curb section, shall be set in the places provided in the forms not more than ten (10) feet apart. Templates shall be adjusted under the supervision of the Engineer so as to prevent short sections (less than five (5) feet).

Concrete shall not be placed in the forms for curb until the forms and subgrade have been tested, inspected and approved by the Engineer. At least one hundred (100) feet of forms shall, at all times, be set and grade tested and approved ahead of pouring operations.

2. Sections

Combination curb and gutter, Type "A", shall be of the vertical curb type, conforming to the dimensions shown on Standard Detail 7-01 of this chapter. Slope curb, Type "D", shall conform to the dimensions shown on SD 7-02. Type "H" curb and gutter shall conform to the dimensions shown on SD 7-04. Transitions from Type "D" and Type "H" curb to Type "A" curb shall conform to the dimensions shown on SD 7-03 and SD 7-05, respectively.

The curb at street corners shall be constructed on a thirty-five (35) foot radius unless otherwise directed. At driveways, the curb and gutter shall be constructed on a three (3) foot radius.

Concrete curb shall be finished in strict compliance with Section C.1.a of this chapter.

After curb and adjacent paving has been completed, that area between the curb and sidewalks shall be cleared of all construction debris and neatly graded.

E. SIDEWALKS, DRIVEWAYS, WHEEL CHAIR RAMPS & RAILROAD CROSSINGS

Sidewalks and driveways shall be constructed of Portland Cement Concrete. No other material will be allowed.

Concrete for sidewalks, wheel chair ramps and driveways shall be Class "A", three thousand (3,000) PSI, Concrete proportioned, mixed, textured and placed, in strict accordance with Section C of this chapter.

Generally, the alignment and grade of sidewalks will be determined from the previously placed concrete curb.

The alignment for sidewalks shall be such that the back edge (property line edge) shall be located on and along the right-of-way line. Reference Standard Detail 1-02.

The grade for sidewalks shall be such that the back edge (property owner's side) shall be a minimum of one-fourth inch (1/4") per foot above the grade of the curb at a point on the curb directly opposite. All sidewalks shall be maintained with a maximum of one-fourth (1/4) inch per foot fall across the sidewalk width. Reference Standard Detail 1-02. Driveways shall connect the openings in the curb and extend across to the back edge of the sidewalks.

Concrete shall not be placed in the forms for sidewalks until the forms and subgrade have been tested, inspected and approved by the Engineer.

1. **Excavation and Subgrade Preparation**
   Excavation and subgrade preparation for concrete sidewalk, wheel chair ramps and driveways shall be in strict compliance with these standards as stated in Section B of this chapter.

2. **Forms**
   Forms shall be of wood or metal, straight and free from warp, and of sufficient strength to resist springing during the process of depositing and consolidation of the concrete. The width of the forms for sidewalks and driveways shall be equal to the full depth of the sidewalks. Forms shall be securely staked and braced true to line and grade.

3. **Width and Thickness**
   All sidewalks shall be constructed to the uniform thickness of four (4) inches, and shall be constructed a minimum width according to the provisions of Table 1 of Chapter VII, Traffic Engineering, of these Standards. All wheelchair ramps shall be constructed to the uniform thickness of six (6) inches, and shall be constructed according to the City's Standard Details. Driveways shall have a uniform thickness of six (6) inches, including that section which crosses the sidewalk area, excepting that in residential areas only, where the sidewalk is pre-existing and in sound condition prior to driveway installation, the existing sidewalk will be allowed to remain at four (4) inches thickness. However, should the four-inch section fail and require replacement, it will be replaced completely at six (6) inch thickness across the entire width of the driveway. The width of driveways shall be within the limits established in Table 3 of Chapter VII, Traffic Engineering, of these Standards.

4. **Construction of Sidewalks and Driveways**
   After the forms have been set, the Engineer shall inspect the form for proper line and grade and shall check the subgrade for proper compaction before allowing any concrete to be placed. Sidewalks shall be "scored" one (1) inch deep in sections to form squares equal to the width of the sidewalk. All "scores" shall be straight and

rounded at the surface with the proper edging tool, or as directed by the Engineer. The edges of driveways will be worked with an edging tool and will be sectioned into squares as shown on SD 8-02. An expansion joint shall be installed for every thirty (30) linear feet of sidewalk against all structures, pavement and curbs, and at such other places deemed necessary by the Engineer.

The Engineer shall require any concrete that fails to meet the required compressive strength for Class "A" concrete after twenty-eight (28) days to be removed from any portion of a sidewalk or driveway and be replaced at the owner's expense.

5. Concrete Curing and Finishing

The curing and finishing of concrete sidewalks and driveways shall be in strict compliance with Section C of this chapter.

6. Wheel Chair Ramps

Wheel chair ramps shall be installed at all street intersections and at other major points of pedestrian flow. Reference SD 8-09, SD 8-10, SD 8-11, SD 8-12 and SD 8-13 of this chapter.

New wheelchair ramps shall be constructed with cast-in-place detectable warning tiles such as "Armor-Tile," as manufactured by Engineering Plastics, Inc., "Alert-Cast," as available through Detectable Warning Systems of Wilmington, NC, or other City-approved equal. Cast-in-place tiles shall be brick red in color, except in designated historic areas, where black tiles shall be used. New wheelchair ramps constructed within NC DOT rights-of-way shall comply with NC DOT specifications.

Existing wheelchair ramps shall be retrofitted with flexible surface-applied detectable warning mats such as "Alert-Mat," as available through Detectable Warning Systems of Wilmington, NC, or other City-approved equal. Surface-applied mats shall be black in color. Wheelchair ramps to be retrofitted with surface-applied detectable warning mats within NC DOT rights-of-way shall comply with NC DOT specifications.

7. Railroad Crossings

Railroad crossings shall include the installation of a permanent type crossing system. Fab-Ra-Cast, as manufactured by Plant City Steel Company, Division of Hasco Corporation, or T-Core, as manufactured by True-Temper Corporation, or approved equals shall be used for these installations.

F. BASE COURSE MATERIALS

Base course for bituminous concrete pavement shall be fine and course aggregate, consisting of crushed stone and crushed gravel so proportioned as to meet the grading requirements as specified below using AASHTO Method T-88.

Sieve Designation	Percentage by Weight Passing
1-1/2 inch	100
1 inch	80-95
1/2 inch	60-75
No. 4	40-55
No. 10	28-43
No. 40	15-27
No. 200	5-12

The material passing the No. 200 sieve shall be not more than two-thirds (2/3) the percentage passing the No. 40 sieve.

1. **Weather Limitations**
   Stabilized aggregate base courses shall not be constructed unless the atmospheric temperature is at a minimum of thirty-five (35) degrees Fahrenheit and rising. Any areas of completed base course that are damaged by freezing shall be reconditioned, reshaped and re-compacted.

2. **Preparation of Subgrade**
   Prior to construction of the base course, the previously constructed subgrade shall be dry and clean of all foreign substances. The surface of the subgrade will be inspected by the Engineer for adequate compaction and surface tolerances. Any ruts or soft-yielding spots that may appear in the subgrade and any areas having inadequate compaction shall be corrected by loosening, removing and adding approved material, reshaping re-compacting the affected areas to line and grade, and to the specified density requirements.

3. **Manipulation and Compaction**
   After sufficient material has been placed on the subgrade to obtain the specified thickness of base, it shall be well rolled and machined until thoroughly compacted. Frequent template checks shall be made to ensure that a minimum amount of patching is necessary after complete compaction is secured. If patching is required, the base material in place shall be scarified to a minimum depth of four (4) inches to secure adequate bonding of previously placed base and new material. The base course shall be compacted its full depth to at least ninety-five (95) percent of the density at optimum moisture, as determined by ASTM D 698, latest revision.

4. **Thickness**
   Compacted thickness of base course shall be a minimum of six (6) inches for local streets, cul-de-sacs, and alleys. Other classifications of streets, such as collector streets, minor and major thoroughfares, frontage roads, expressways, freeways, and others intended for heavier usage, shall have a base thickness in accordance with the standards of the NCDOT for such classifications, and in no cases shall the base thickness be less than six (6) inches. Base course material shall be installed under all paved areas. Along collector higher classified streets, and where directed by the Engineer, the base course shall extend one (1) foot behind and under all curb sections.

No base material shall be placed on unstable and/or pumping subgrade. Where such soils exist, the material shall be removed and replaced with suitable fill material and compacted in accordance with Section B of this chapter. Where the seasonal high water table is within three (3) feet of the proposed top of subgrade, additional measures will be required, which could include sub-drains, the use of bituminous coated base course (per NCDOT specifications), additional fill, etc. The developer's engineer shall recommend to the City proposed sound engineering solutions. Approval by the Engineer will be required prior to the implementation of the proposed designs. On residential local streets, the stone under and one foot behind the curb may be eliminated with the approval of the Engineer.

5. Maintenance

Traffic shall be kept off the base between final compaction and surfacing.

G. ASPHALT PAVING

1. General

The bituminous surface course shall consist of fine and course mineral aggregate and mineral filler uniformly mixed with hot bituminous material in an approved plant placed and compacted on a prepared base course to a minimum depth of two (2) inches for local streets, cul-de-sacs and alleys. Other classifications of streets may have additional thickness as required by the Subdivision Review Board.

The design for bituminous mixture shall be either a Marshall Mix design or a Superpave Mix design. The design mix shall be the latest NCDOT design mix for southeastern North Carolina. The surface course for local streets, cul-de-sacs and alleys shall be I-2 for a Marshall mix or S-9.5A for a Superpave mix, provided the City Engineer may review and approve other classification mix(es) when appropriate. The mix design for all other street shall be reviewed on a case by case basis.

2. Transportation of Bituminous Mixture

Transportation of bituminous mixture from the paving plant to the site shall be in trucks having tight, clean and smooth beds. Each load shall be covered with canvas or other suitable material of ample size to protect it from the weather and to prevent the loss of heat. The mixture shall be delivered to the area to be paved in such manner that the temperature at the time of dumping into the spreader will not be less than two hundred and twenty-five (225) degrees Fahrenheit. Any loads wet excessively by rain will be rejected. Hauling over freshly laid material will not be permitted.

3. Placing Asphaltic Surface Course

No surface course shall be laid unless the temperature is a minimum of forty (40) degrees Fahrenheit and rising. Prior to delivery of surface course materials, the base course shall be completed for receiving the surface course material, and shall be kept free from traffic, with the exception of the mixture vehicles and those other vehicles

necessary for the placing of the pavement. The pavement shall be placed only when weather conditions are suitable. The mixture shall be laid by an approved type paving machine and finished to the proper grade for rolling. Asphalt mixtures that have temperatures of less than two hundred and twenty-five (225) degrees Fahrenheit, when ready to dump into the mechanical spreader, will be rejected.

Contact surfaces of curb and gutters, manholes, etc., shall be painted with a thin uniform coating of cut-back asphalt just before the surface mixture is placed against them. Immediately adjacent to headers, flush curbing, gutters, liners and other structures, the surface course mixture shall be spread uniformly high so that after final compaction it will be approximately one-eighth (1/8) inch above the edge of such structures.

4. Compaction of Asphalt Surface Course

The compression and compaction of the surface course shall be secured with a ten (10) ton tandem roller and shall be kept in continuous operation during the placing and finishing of the asphalt surface course until cooled. Rolling will start longitudinally at the side and proceed towards the center of the pavement, overlapping on successive trips at least one-half (1/2) the width of the roller. The pavement surface shall, after initial compaction, be subjected to diagonal rolling in a weaving fashion so that all areas are rolled in two (2) directions in addition to the initial longitudinal scaling. Rolling shall be continued until all roller marks are eliminated. The motion of the roller shall at all times be slow enough to avoid displacement of the hot mixture.

Rolling shall proceed immediately after placing in order to obtain maximum compression and density and, in the event that the rolling operation is not able to properly keep up with the placing, the finishing machine shall be stopped and no pavement shall be laid until the rolling is caught up.

5. Joints

a. General

All joints shall present the same texture, density and smoothness as other sections of the course. The joints between old and new pavements or between successive days' work shall be carefully made in such manner as to ensure a continuous bond between old and new sections of the course. All contact surfaces of previously constructed pavements shall be painted with a thin, uniform coat of hot bituminous material just before the fresh mixture is placed.

b. Transverse

The roller shall pass over the unprotected end of the freshly laid mixture only when the laying of the course is to be discontinued or when delivery of mixture is
interrupted to the extent that the unrolled material may become cold. In all cases, the edge of the previously laid course shall be cut back to expose an even vertical surface for the full thickness of the course.

c. Longitudinal

In all cases the edges of cold longitudinal joints shall be cut back to expose an even, vertical surface for the full thickness of the course prior to constructing the adjacent pavement.

6. Protection and Testing of Asphaltic Surface Course

Sections of newly placed and compacted surface course shall be barricaded and protected from all defects for a period of at least eight (8) hours until they have become properly hardened by cooling.

a. Pavement Samples

The owner shall furnish test samples cut from the completed work when and as required by the Engineer. The areas of base and surface courses so removed shall be replaced with new mixture and finished so as to conform with the surrounding pavement.

b. Tack Coat

A tack or squeegee coat of hot asphalt grade RS-1h shall be applied to existing pavement surface, as directed by the Engineer, prior to placing the surface course thereon. This coat shall be applied in quantity not to exceed 1/10 gallon per square yard and in a manner which has been approved by the Engineer. All castings, the gutter edge and other surfaces which pavement rests against shall be painted with tack coat material by way of a hand brush prior to the placing of the surface course. All asphaltic cement or other materials which discolor the surface of concrete structures shall be removed at the Contractor's expense, and his inability to remove such foreign and disfiguring stains shall result in the complete removal of the structures so stained or disfigured. Such removed structures shall be replaced at the Contractor's expense. Particular care shall be taken to prevent tack coat from getting on gutter areas.

When resurfacing existing pavements, the existing pavement shall be tacked with RS-1h asphalt at the rate of 0.03 gallon per square yard to 0.10 gallon per square yard. Application of the tack coat shall be made by an approved asphalt distributor. The tack coat shall be allowed sufficient time to "break" prior to beginning the resurfacing operation. The cost of tack coat shall be included in the unit price bid for bituminous concrete surface course as shown in the proposal.

H. MATERIALS

1. Cement

Portland: ASTM-C-150, latest revision, Type I or III.
Asphaltic: Shall be 85-100 penetration petroleum asphalt to meet AASHTO M-20-42, latest revision.

2. **Mortar**

Mortar shall be prepared from cement, sand and water of an approved source. The mortar shall consist of one (1) part by volume of Portland cement and three (3) parts by volume of sand. Water shall be from a source approved by the Engineer.

3. **Clay Brick**

Bricks shall be whole brick of standard size with straight and parallel edges and square corners. They shall be of compact texture, full weight and entirely true, free from injurious cracks and flaws, tough, strong and shall have a clear ring when struck together.

4. **Clay Brick for Manholes**

None but whole, sound, hard, straight, thoroughly burned brick, uniform in structure, with true and even faces shall be used. The brick shall be entirely free from injurious defects.

5. **Concrete Brick**

Whole, concrete brick uniform in structure with true and even faces shall be permitted for manhole and catch basin construction. The brick shall be entirely free from injurious defects.

6. **Precast Concrete Manholes**

Precast concrete manhole units shall be four (4) feet, zero (0) inch diameter with a six (6) inch extended monolithic base, four thousand (4,000) psi, five (5) inch walls meeting ASTM Specification C-478. Precast concrete manholes shall be placed on twelve (12) inches of washed stone. Precast manholes shall use precast adjustment rings, with the minimum adjustment height of two (2) inches and a maximum adjustment height of twelve (12) inches. The other material requirements are as follows:

- H-20 Highway Loading
- One pour monolithic base section base extends 6 inches beyond outside wall for manholes smaller than 5 feet I.D., and all manholes deeper than 8 feet.
- Reinforced steel - ASTM A-185
- Steel reinforced Copolymer Polypropylene Plastic steps
- Flexible boot connector ASTM C-928 with cast iron or stainless steel hardware.
- Section joint sealant - Butyl rubber sealant AASHTO M-198, ASTM C-990, and Fed. Spec. SS-S-210A.

7. **Gray Iron Castings**

a. **Requirements and Methods of Testing**

All iron castings for manhole and well hole frame and covers, inlet frames, covers and traps, and for other sewer appurtenances, unless otherwise specified in the plans, shall conform to the requirements of Gray Iron Castings of the American Society for Testing Materials.

b. Manhole Castings

Manhole castings shall conform to ASTM "Gray Iron Casting" and be marked "Sanitary Sewers" or "Storm Drain" and shall be East Jordan Iron Works, No. V-1384, Ennis Enterprises, No. MH-GRE-24, Vulcan Foundry, No. V-2384 (Ref. SD 14-02 in Chapter IV), or an approved equal.

8. Storm Drain Manhole Steps

Manhole steps shall be East Jordan Iron Works, No. 8500, Neenah Foundry Co, No R-1980-I, Vulcan Foundry No. 1999-6, or an approved equal.

9. Sanitary Sewer Manhole Steps

Sanitary sewer manholes shall not be furnished with manhole steps unless directed by the Engineer. Specifications on the manhole steps will be provided on a case by case basis when required.

10. Sanitary Sewer Pipe

a. Sanitary Sewer Mains

1. Polyvinyl Chloride (PVC) Pipe

PVC pipe shall have integral wall bell and spigot push-on joints and shall meet the requirements of ASTM-D-3034, Type PSM, SDR 35 or SDR 26 for pipe sizes 8" to 15". Where pressure pipe is required or specified, the PVC pipe shall meet the requirements of ASTM-D-2241. Fittings shall be push-on joint PVC fittings furnished by the pipe manufacturer.

2. Ductile Iron Pipe (DIP)

Push joint ductile cast iron pipe shall be Class 51. The pipe shall be centrifugally cast and shall be made of ductile cast iron 60-42-10 grade in accordance with ANSI/AWWA C151/A21.51. The ductile cast iron pipe shall be designated for the rated working pressure of 350 psi, plus surge pressure of 100 psi per ANSI/AWWA C150/A21.50 and for the indicated cover shown on the plans in a flat bottom trench with tamped backfill to the center line of the pipe based on 42,000 psi tensile strength and 90,000 psi modulus of rupture. Factor of safety shall be 2.0. The pipe shall be designed for internal pressure or external load or 3% maximum deflection, whichever requires the greatest metal thickness as determined by flexible pipe design methods, per ASME 62-WA-353. Metal thickness shall include .08-inch corrosion allowance and .05-inch foundry tolerance for 3-inch through 8-inch diameter pipe, .06-inch foundry tolerance for 10-inch through 12-inch diameter pipe, and .07-inch foundry tolerance for 14-inch through 42-inch. The pipe shall be furnished in nominal 16-foot to 20-foot laying lengths. All pipe shall have an interior ceramic epoxy coating, 40 mils thick, equal to Protecto 401, and bituminous coated outside in accordance with ANSI/AWWA C104/A21.4. Pipe shall be furnished complete with gaskets and lubricant, per ANSI/AWWA C104/A21.4.

3. Transition Fittings
Transiting fittings for connection between pipes of dissimilar material shall be adjustable repair couplings meeting ASTM C 564, and manufactured by Mission Rubber Company Inc., Fernco - (rigid band), Romac, or equal.

4. PVC pipe, with push-on joints and elastomeric gaskets, conforming to the standards of AWWA C900, Class 150 or AWWA C905, Class 150 for pipes larger than 14-inches, shall be required when the depth of main, measured from the invert of the pipe to finished grade, equals or exceeds ten (10) feet. All PVC mains shall be fully encased in stone bedding when the depth equals or exceeds eight (8) feet.

b. Sewer Services

1. Polyvinyl Chloride (PVC) Pipe
PVC pipe for sewer service lines and stacks (4-inch and 6-inch diameter) shall be integral wall bell and spigot push-on joints and shall meet the requirements of ASTM-D-3034, type PSM, SDR-26.

2. Cast Iron Pipe (CIP)
CIP for sewer services shall be heavy-duty cast iron soil pipe complying with Federal Specifications WWP-401.

11. Reinforced Concrete Pipe and Joint Material

a. Concrete pipe used for storm drain shall conform to the requirements of ASTM-C-76, latest revision, Class III.

b. Concrete pipe for use as casement pipe shall conform to the requirements of ASTM-C-76, latest revision, Class IV.

c. Concrete pipe joint material shall meet AASHTO M-198, ASTM D-482, Fed. Spec. SS-S-210A.

12. Corrugated Metal Pipe

a. All corrugated metal pipe (CMP) shall be manufactured in accordance with the appropriate ASTM Specifications. Corrugated metal pipe shall be galvanized (zinc coated) in accordance with ASTM A-760 and AASHTO M-36 latest revisions and shall be fully bituminous coated. Pipe sizes of 54 inches or less shall have the invert paved with bituminous concrete. Pipe sizes larger than 54 inches shall be fully paved with bituminous concrete (smooth flow). All placement of bituminous concrete in CMP shall be in accordance with AASHTO M-190. All CMP shall be furnished in accordance with the gage and corrugation specified on SD2-13 listed with the Standard Details in Chapter V.

b. Corrugated metal (CM) arch pipe shall meet all of the specification for the equivalent diameter round CMP. When the invert of CM arch pipe is required to be paved, the pavement shall extend across the entire invert.

c. Corrugated metal pipe joints, fittings, and bands shall be manufactured, coated, and installed as specified by the pipe manufacturer. The joints, bands, and fittings shall receive the same coatings as the pipe and shall be designed and installed to minimize infiltration. To accommodate the corrugated bands, helically corrugated pipe shall be re-rolled at the ends to provide two annular corrugations. The inner corrugations shall accommodate two closed cell neoprene O-ring gaskets. Other methods of providing a water tight joint shall be submitted to the Engineer for review and approval.

13. <u>Aluminum Corrugated Pipe</u>

Aluminum corrugated pipe shall be used only on risers and barrels for water quality and retention/detention basins. Specifications for aluminum corrugated pipe shall be submitted to the Engineer for review and approval.

Aluminum corrugated pipe joints shall be in accordance with the manufacturer's recommendation and shall provide a water-tight seal at all joints. Specifications for joints and fittings for aluminum corrugated pipe shall be submitted to the Engineer for review and approval prior to installation.

14. <u>High Density Polyethylene Pipe (HDPE)</u>

HDPE pipe shall not be permitted under any roadways. When drainage is being installed in open areas away from traffic, HDPE pipe may be permitted on a case-by-case basis. HDPE pipe shall also be allowed for driveway culverts. In all cases, a minimum of two (2) feet of cover shall be required and the ends of the HDPE pipe must be located in a structure or have a concrete headwall constructed to protect the ends of the pipe. HDPE pipe shall be limited to a maximum diameter of 24-inches. HDPE pipe joints shall be in accordance with the manufacturer's recommendations and shall provide a water-tight seal.

15. <u>Flared End Sections</u>

Flared end sections (FES) shall be installed at locations shown on the plans or as directed by the Engineer . FES's shall be manufactured of the same material as the pipe to which it is being connected and shall be manufactured and installed with the same type of joint as the pipe. (The exception to this is that HDPE pipe must transition to concrete and use a reinforced concrete flared end section.)

a. <u>Reinforced Concrete Flared End Sections</u>

Reinforced concrete flared end sections shall be manufactured in accordance with plans that have been approved by the North Carolina Department of Transportation. The concrete used in FES's shall attain a strength of 3500 psi when tested in accordance with AASHTO T22. Where grates are to be installed on FES's, provisions for mounting the grate shall be provided.

b. Corrugated Metal Flared End Sections

Corrugated metal FES's shall be manufactured in accordance with plans provided by the manufacturer and approved by the Engineer. FES's on which the coatings have been damaged or broken, either in the shop or in shipping, shall be repaired in accordance with applicable specifications. All corrugated FES's shall be fully bituminous coated and shall have bituminous concrete paved inverts.

16. Subdrain Pipe

Subdrain pipe shall be six (6) inch perforated pipe with the perforations on the bottom of the pipe. Metal subdrain pipe shall be galvanized Helcor pipe or equal. PVC subdrain pipe shall be Schedule 40 meeting the requirements of ASTM Specification D-1785.

17. Water Pipe and Fittings

Pipe for water mains shall be ductile iron pipe (DIP) or Polyvinyl Chloride (PVC) pipe meeting the specifications below. All mains along thoroughfares and other major roadways and in all industrial areas shall be DIP. Mains in other areas, sizes 2-inch through 12-inch may be PVC or DIP. All mains larger than 12-inch shall be DIP.

All PVC mains shall include the installation of a continuous strand of 10-gage copper wire along the main. The insulation shall be removed at all valves and fittings and connected to the valve and/or fittings. The wire shall connect to the fire hydrants so that the locator signal can be connected at the hydrant. Where hydrants are spaced greater than 1000 feet apart, provisions shall be made for connection to the locator wire. The Engineer shall review and approve the design and location of the additional tracer wire connection points.

a. Push Joint Ductile Iron Pipe

Push joint ductile cast iron pipe shall be Class 51. The pipe shall be centrifugally cast and shall be made of ductile cast iron 60-42-10 grade in accordance with ANSI/AWWA C151/A21.51. The ductile cast iron pipe shall be designated for the rated working pressure of 350 psi, plus surge pressure of 100 psi per ANSI/AWWA C150/A21.50 and for the indicated cover shown on the plans in a flat bottom trench with tamped backfill to the center line of the pipe based on 42,000 psi tensile strength and 90,000 psi modulus of rupture. Factor of safety shall be 2.0. The pipe shall be designed for internal pressure or external load or 3% maximum deflection, whichever requires the greatest metal thickness as determined by flexible pipe design methods, per ASME 62-WSA-353. Metal thickness shall include .08-inch corrosion allowance and .05-inch foundry tolerance for 3-inch through 8-inch diameter pipe, .0-06-inch foundry tolerance for 10-inch through 12-inch diameter pipe, and .07-inch foundry tolerance for 14-inch through 42-inch. The pipe shall be furnished in nominal 16-foot to 20-foot laying lengths. All pipe shall be cement mortar lined and seal coated inside, and bituminous coated outside in accordance with

ANSI/AWWA C104/A21.4. Pipe shall be furnished complete with gaskets and lubricant, per ANSI/AWWA C111/A21.11.

b. Polyvinyl Chloride (PVC) Pipe

PVC pipe for water mains sizes 4-inch through 12 inches shall conform to AWWA C900, class 150, with push-on joints. Elastomeric gaskets shall conform to ASTM F477. Pipe shall be furnished complete with gasket and lubricant.

PVC pipe for water mains smaller than 4 inches shall be SDR-26, push-on joints and shall conform to ASTM -D-2241-80. The pipe shall include the seal or mark of the laboratory indicating that the pipe is suitable for the transport of potable water.

c. Fittings

All fittings for mains 4 inches and larger shall be ductile iron meeting the specification below. Fittings for mains smaller than 4 inches shall be PVC meeting the specifications below.

1. Ductile Iron Fittings

   The fittings shall be standard mechanical joint fittings made of ductile iron in accordance with ANSI/AWWA C110/A21.10. Compact ductile iron fittings meeting ANSI/AWWA C153/A21.53-94 shall also be acceptable. Standard mechanical accessories shall be furnished for each bell opening consisting of HSCI bolts, cast iron glands, and plain rubber gaskets in accordance with ANSI/AWWA A21.11-90. Fittings shall be cement mortar lined and seal coated inside per ANSI/AWWA C104/A21.4-90. Where flanges are indicated on fittings they shall be F and D 125 pound per ASME/ANSI B 16.42-87.

2. Polyvinyl Chloride (PVC) Fittings

   PVC fittings shall be used only for mains less than 4 inches in diameter. PVC fittings shall be push-on fittings with elastromeric ring gaskets which shall conform with ASTM D 3139-77. The fittings shall be supplied by the pipe manufacturer and shall be certified for use in the transport of potable water. Fittings shall be rated for a minimum operating pressure of 250 psi.

d. Water Services

1. 3/4-inch and 1-inch house water services

   3/4-inch and 1-inch house water services shall be Type K soft copper tubing, complying with Federal Specifications WW-T-799 and ASTM B-88.

2. 1-1/2-inch and 2-inch water services

1-1/2-inch and 2-inch water services shall be installed with Type K soft copper tubing, complying with Federal Specification WW-T-799 and ASTM B-88, or with brass pipe fittings. Brass pipe shall be red brass pipe conforming to ASTM B43-62.

3. For services larger than 2-inch, the materials shall be the same as stated above, or shall be ductile iron pipe and fittings.

e. <u>Valve Boxes and Extensions</u>

Valve boxes and extensions shall be Wilmington Standard Telescoping valve box and extension, as per SD14-07 in Chapter III of these Standards.

f. Water Service Fittings: Taps and service laterals shall be 1-inch and 2-inches. The services shall be reduced to the desired standard size at the meter location. For services larger than 2-inches, materials and installation will be reviewed on an individual basis.

1. **<u>Copper Services: USE ONLY AS DIRECTED BY ENGINEER)</u>** Service saddle shall have double stainless (ss) straps and factory coated corrosion resistant body. Service saddle shall be Smith-Blair 317, Romac 202S, JCM 406, Mueller DR2S or equal. Curb stops shall be Mueller H 15174, Ford B21, McDonald 6100 series, or equal. Corporation stops shall be Mueller H 15000, Ford F600, McDonald 4701 series, or equal. City will allow compression fittings for copper pipe service of 1”diameter. Each curb stop shall be furnished with a IMP brass bushing, 1”x 3/4”, and brass meter coupling equal to McDonald 4620, Ford meter coupling, or Mueller H 10890. The brass meter yoke shall be as specified in T-14.15.2. The meter box shall be as shown on Standard Details SD 4-12 or SD 4-13.
2. **<u>Polyethylene Service Fittings:</u>** Service saddles shall be as specified in T-14.15.1. Corporation stop shall be 1” or 2”, CC x CTS, equal to Mueller P15013 w/ss stiffener, Ford FB 1000 w/ss stiffener or McDonald 4701-22 w/ ss stiffener. Curb stops shall be equal to Ford B61-444 w/ss stiffener, Mueller B-25172 w/ss stiffener, or McDonald 6102W-22 w/ss stiffener. Each curb stop shall be furnished with an IMP brass bushing, 1”x 3/4”, and brass meter coupling equal to McDonald 4620, Ford 600, or Mueller H 10890. Each service shall be furnished with a brass meter yoke with lock stop, 7-inch riser, 5/8” x ¾” size unless directed otherwise, equal to Mueller B 24118, McDonald 18-207WX, or Ford V41-7. The meter yoke shall be furnished with a brass meter coupling as specified above. The meter box shall be as shown on Standard Details SD 4-12 or SD 4-13

g. <u>Meter Boxes</u>

1. Cast iron meter boxes shall conform to the requirements for Gray Iron Castings of the American Society for testing materials. The cast iron meter

box shall be Ennis Enterprises No. MBX-1, Vulcan Foundry No. MBX-1, or an approved equal.

2. PVC meter boxes shall be 11-34/ inches x 17 inches at the top and taper to 16-1/2 inches x 19 inches at the bottom. The box shall be a minimum of 12 inches deep and shall require a standard drop-in lid, an iron reader lid, two 3-inch x 4-inch pipe slots, cover snap-in locking recess and snap lock tab.

i. Valves

All valves shall conform to AWWA Specification C500, latest revision, gate valves for ordinary water works service except as hereinafter stated and shall have mechanical joint ends. All valves shall be resilient wedge gate valves, open right and shall have a two (2) inch square head nut upon the end of the stem, with the direction arrow clearly and plainly cast thereon. Valves shall be as manufactured by Clow Corporation, Darling Valve Manufacturing, ~~or~~ Mueller Company, Henry Pratt Company, American AVK Company's Series 25, or equal. The City will accept interior and exterior coating of fusion bonded epoxy, normal coating 6-8 mils, meeting the requirements of AWWA/ANSI C550-01.

1. Vertical Gate Valves

Vertical gate valves shall be used on all lines twelve(12) inches or smaller and shall be open right, non-rising stem type, 175 psi working pressure and 300 psi test pressure with "0" ring stem seals. Valves shall be Resilient Wedge Gate or double disc type with cast iron body and bronze disc seats, stems and wedges. In the open position, the area of the opening shall be equal or greater than the area of the nominal pipe diameter.

2. Horizontal Gate Valves

Horizontal Gate Valves shall be used on all lines sixteen (16) inches in diameter and larger. Valves shall be 150 psi working pressure and 300 psi test pressure. All valves shall have conventional packing. Valves shall be equipped with bevel gear, non-rising type, with grease case of the totally enclosed type and shall be provided with suitable rollers, track, scrapers, and a guide for a disc mechanism through its entire travel length. Horizontal gate valves shall open right and have a bypass valve with a non-rising stem. Valves shall be double disc, with cast iron body and bronze disc seats, tracks and stem. Area of opening in the open position shall be equal to or greater than the nominal pipe diameter.

3. Butterfly Valves

Butterfly valves may be used on all mains 16 inches and larger and shall meet the full requirements of AWWA C504-80, or the latest revision, for class 150B service. All valves shall open right, have mechanical joint connections and have a 2-inch square operating nut. The manufacturer shall have manufactured tight-closing, rubber-seat butterfly valves for buried

service for a period of at least five (5) years. All butterfly valves shall be Henry Pratt Company's "Groundhog", Mueller "Lineseal III", American-Darling "ABC Butterfly valve" or an approved equal.

j. <u>Tapping Sleeve and Valves</u>

Sleeve shall be cast iron or stainless steel 150 psi working pressure, mechanical joint. Valves shall be open right vertical type with "O" ring seals, mechanical joint outlet end and flange end for connection to tapping sleeve. Flange end shall have machined projections to ensure correct alignment. Seat opening of valve shall be slightly larger than nominal size to provide for full diameter cut to be made. Sleeve shall be furnished by valve manufacturer.

k. <u>Hydrants</u>

Hydrants shall be improved type conforming to AWWA C-502, latest revision. Fire hydrants for ordinary waterworks service, approved by American Insurance Association, with four and one-half (4-1/2) inch valve opening; two (2) each, two and one-half (2-l/2) inch hose nozzles with City of Wilmington, North Carolina, standard thread and four and one-half (4-1/2) inch pumper connection. Hydrant shall have breakable barrel and operating stem, and shall be equipped with six (6) inch mechanical joint bottom hub with strapping lugs and one and two-thirds (1-2/3) inch solid pentagonal operating nut and "O" ring seals. Hydrants shall open right and be rated at 150 psi working pressure and 300 psi test pressure. Hydrant shall have two (2) coats of aluminum paint. Hydrant shall be dry-barrel type and be provided with drain outlet for draining when valve is closed. Hydrant shall be Mueller Centurion, Kennedy Guardian, American Darling Mark 73, American AVK Company Model 27/80 Dry Barrel, or approved equal.

1. <u>Fire Hydrant Paint</u>

Paint shall be applied using two coats of the specified paint according to the manufacturer's recommendation. The final coat must be applied after final installation. All hydrant barrels shall be painted with heavy-duty aluminum paint for industrial or commercial use, by Rustoleum, Glidden, Sherwin Williams, Tnemec, or approved equal.

Fire hydrants on 6-inch and 8-inch diameter mains shall have the nozzle caps and bonnet painted with industrial or commercial-use alkyd, safety yellow color by Rustoleum, Glidden, Sherwin Williams, Tnemec, or approved equal.

Fire hydrants on lines greater than 10-inch diameter shall have the nozzle cap and bonnet painted with industrial or commercial-use alkyd, safety green color by Rustoleum, Glidden, Sherwin Williams, Tnemac, or approved equal.

2. Hydrant Laterals

Hydrant laterals shall be ductile iron pipe (D.I.P.). All D.I.P. and fittings shall conform to specification outlined in Section H, 17.a. and H, 17.c.l. of this chapter.

l. Restraint Gland for DIP: The mechanical joint gland style restraint for mechanical joint fittings used on ductile iron pipe may be used for fire hydrant installations and any other location required by the Engineer to be restraint joint fittings. This type of restraint system can be used in lieu the restraint system using tie bolts and restraining rods as shown on the standard detail SD 4-02. The gland style restraint shall be a follower gland, which uses a series of individual actuated gripping wedges to positively engage the pipe surface while allowing joint deflection both before and after installation. This wedging action offers high pressure restraint capacity for mechanical joint fittings, valves, hydrant and pipe with 3" through 16" being rated at 350 psi and larger size rated at 250 psi. All sizes are tested to a minimum of 2:1 safety factor. The mechanical joint restraint glands shall be equal to Megalug, Series 1100 manufactured by Ebaa Iron, Inc., Stargrip Series 3000 manufactured by Star Pipe Products, or RomaGrip by Romac Industries, Inc.

m. Restraint Gland for PVC: The mechanical joint gland style restraint for mechanical joint fittings used on PVC pipe can be used at locations required by the Engineer to be restraint joint fittings. This type of restraint system may be used in lieu of the restraint system using tie bolts and restraining rods as shown on Standard Detail SD 4-02. The gland style restraint shall be a follower gland, which uses a series of individual actuated gripping wedges to positively engage the PVC pipe surface while allowing joint deflection both before and after installation. This wedging action offers high pressure restraint capacity for mechanical joint fittings, valves, and pipe with 3" through 16" being rated at 350 psi and larger size rated at 250 psi. All sizes are tested to a minimum of 2:1 safety factor. The mechanical joint restraint glands shall be equal to Megalug, Series 2000PV manufactured by Ebaa Iron, Inc., PVC Stargrip Series 4000 manufactured by Star Pipe Products, or PVC-RomaGrip by Romac Industries, Inc.

18. Concrete Membrane Curing Compound

The membrane curing compound used in concrete curing shall be white and as specified in AASHTO Specification M-148-49.

19. Expansion Joint Filler (for Concrete Construction)

Expansion joint filler for concrete construction shall be bituminous, preformed, non-extruding joint filler, as specified in AASHTO M33-48.

I. TESTING

TEST/SPECIFICATION	SECTION/REFERENCE	SCOPE
1. AASHTO M 20-42	H - Materials Asphaltic Cement	Specification covers asphalt cements which have been prepared from petroleum.
2. AASHTO M 33-48	H - Materials Expansion Joint Filler	Specification covers bituminous expansion joint filler for concrete.
3. AASHTO M 36		Specification covers corrugated metal pipe intended to be used for the construction of culverts
4. AASHTO M 148-49	H - Materials Concrete Membrane Curing Compound	Specification covers liquid, membrane forming curing compounds suitable for spraying on horizontal and vertical surfaces to retard the loss of water during the early hardening period.
5. AASHTO T 11	G - Asphalt Paving General	Method of test outlines the procedure for determining the total quantity of material finer than a standard No. 200 sieve in aggregates.
6. AASHTO T 88	F - Base Course Materials	Method describes a procedure for the quantitative determination of the distribution of particle sizes in soils.
7. AASHTO T 99 (Standard)	B - Excavation, Grading and Backfilling	Method of test is intended for determining the relationship between the moisture content of soils and resulting densities.
8. AASHTO T 99 (Modified)	B - Excavation, Grading and Backfilling, Backfilling pipe installations	Method of test is intended for determining the relationship between the moisture content of soils and resulting densities.
9. ASTM A 48	H - Materials Manhole Castings	Specification covers manufacturing and performance requirements for gray iron castings

TEST/SPECIFICATION	SECTION/REFERENCE	SCOPE
10. ASTM A 339	H - Materials Water Pipe and Fittings	Specification covers castings made of ductile iron, also known as spheroidal or modular iron, which is defined as cast iron with graphite substantially spheroidal in shape and essentially free of other forms of graphite.
11. ASTM B 88	H - Materials Copper water house services	Specification covers seamless copper tubes especially designed for plumbing purposes, underground water services, etc.
12. ASTM C 76	H - Materials R.C. pipe and joint materials	Design, manufacturing and strength requirements for Class III and Class IV reinforced concrete pipe intended for the conveyance of storm water.
13. ASTM C 150	H - Materials Cement	Specification covers physical and chemical requirements for Portland Cement.
14. ASTM D 482	H - Materials R.C. pipe and joint materials	Specification covers joints for circular concrete sewer and culvert pipe.
15. ASTM C 478	Storm Drains Precast manholes	Specification covers precast reinforced concrete manhole riser sections and appurtenances such as grade rings, tops and special sections up to 72 inches in diameter.
16. ASTM D 698	B/F - Base Course Manipulation and compaction	Test covers the procedures for determining the moisture/density relationships in soils.
17. ASA 21.1-1957	H - Materials Push joint ductile cast iron	Specification covers required design tolerances for water hammer in push joint ductile cast iron pipe.

TEST/SPECIFICATION	SECTION/REFERENCE	SCOPE
18. AWWA C 500	H - Materials Valves	Specification covers manufacturing and performance requirements for gate valves for ordinary water works service.
19. AWWA C 502	H - Materials Hydrants	Specification covers manufacturing and performance requirements for fire hydrants for ordinary water works service
20. AWWA C 600-64		Specification covers allowable leakage test requirements for mechanical joint and push joint pipe.
21. Federal Specification WW-P 421 C	H - Materials Push Joint D.I. Pipe	Specification covers cast iron (gray iron and ductile iron) pressure pipe for conveying water, sewage and other liquids.
22. Federal Specifications WW-T 799	H - Materials Copper water house services	Specification covers seamless copper water tubing in sizes suitable for general plumbing and commonly used with solder flared or compressed type fittings.

*Latest revision of above specifications shall apply.

GENERAL REQUIREMENTS

STANDARD DETAILS

TABLE OF CONTENTS

DETAIL DESCRIPTION	SD	PAGE
STANDARD FORMS	15-18	2-29
CURB SECTION – TYPE “A”	7-01	2-30
CURB SECTION – TYPE “D”	7-02	2-31
TYPE “D” CURB TRANSITION	7-03	2-32
CURB SECTION - TYPE “H”	7-04	2-33
TYPE “H” CURB TRANSITION	7-05	2-34
GENERAL DRIVEWAY NOTES	8-07	2-35
DRIVEWAY – TYPE “A” CURB AND GUTTER	8-02	2-36
DRIVEWAY – SLOPE FACE CURB	8-03	2-37
DRIVEWAY – TYPE “D” CURB	8-01	2-38
DRIVEWAY – TYPE “D” CURB – PLAN VIEW	8-06	2-39
DRIVEWAY – NO CURB - RESIDENTIAL	8-05	2-40
CATCH BASIN CASTINGS	2-16	2-41
GRILL CATCH BASIN CASTINGS	14-04	2-42
MONUMENT CASTING	14-05	2-43
MONUMENT CASTING AND BASE	15-01	2-44
BRICK SIDEWALKS	8-08	2-45
WHEELCHAIR RAMPS - GUIDELINES	8-09	2-46
WHEELCHAIR RAMPS & DEPRESSED CURBS – GUIDELINES CROSS INTERSECTIONS	8-10	2-47
WHEELCHAIR RAMPS & DEPRESSED CURBS – GUIDELINES TEE INTERSECTIONS	8-11	2-48
WHEELCHAIR RAMPS & DEPRESSED CURBS – SPECIAL SITUATIONS	8-12	2-49
WHEELCHAIR RAMPS & DEPRESSED CURBS – SPECIAL SITUATIONS	8-13	2-50
SIDEWALK DETAILS	8-15	2-51
MASONRY BLOCK RETAINING WALL, FOOTING & STEPS	8-14	2-52
PIPE BEDDING DETAIL – CLASS “B” AND “C”	3-07	2-53
PIPE TRENCH DETAIL	1-07	2-54
PAVEMENT REPAIR @ PIPE LOCATIONS	1-05	2-55
STANDARD STREET SECTION	1-02	2-56

℄ CURVE DATA				
CURVE	A	R	T	L
1				
2				
3				
4				
5				
6				
7				
8				

LEGEND

W	EXISTING WATER LINE	W	PROPOSED WATER LINE
	EXISTING SD (STORM DRAIN)		PROPOSED STORM DRAIN
SS	EXISTING SS (SANITARY SEWER)	SS	PROPOSED SANITARY SEWER
FM	EXISTING SANITARY SEWER FORCE MAIN		PROPOSED MANHOLE
GAS GAS	EXISTING GAS LINE		PROPOSED SANITARY CLEANOUT
	EXISTING LOT LINES		PROPOSED WATER VALVE
	EXISTING RIGHT OF WAY LINES		PROPOSED WATER METER
MH	EXISTING MANHOLE		PROPOSED FIRE HYDRANT
	EXISTING SANITARY CLEANOUT		PROPOSED CATCH BASIN
	EXISTING WATER VALVE	GB	PROPOSED GRILL BASIN
	EXISTING WATER METER		
	EXISTING POWER POLE		
	EXISTING FIRE HYDRANTS		
	EXISTING CATCH BASIN		
GB	EXISTING GRILL BASIN		
	EXISTING LIGHT POLE		
DP	EXISTING IRON PIPE (PROPERTY CORNER)		
	EXISTING TREE		

	STANDARD DETAIL	CITY OF WILMINGTON ENGINEERING OFFICE 305 CHESTNUT STREET PO. BOX 1810 WILMINGTON N.C. 28402 (910) 341-7807
DATE: JULY 2003	STANDARD FORMS	
DRAWN BY JSR		
CHECKED BY B.P., P.E.		
SCALE NOT TO SCALE		SD 15-18

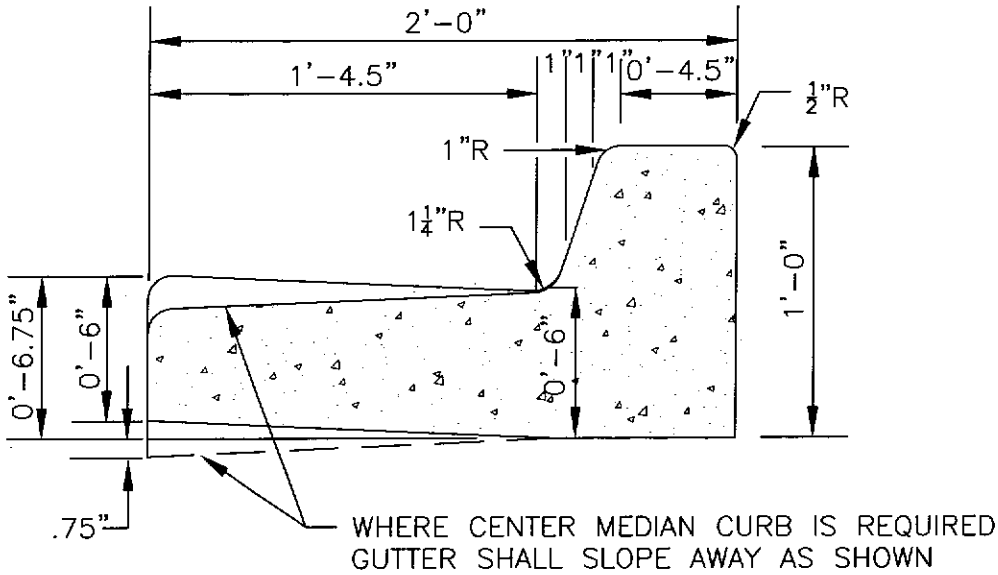

STANDARD CURB SECTION TYPE "A"

	STANDARD DETAIL	CITY OF WILMINGTON ENGINEERING OFFICE 305 CHESTNUT STREET PO. BOX 1810 WILMINGTON N.C. 28402 (910) 341-7807
DATE: 2001	CURB SECTION TYPE "A"	
DRAWN BY JSR/CMR		
CHECKED BY B.P., P.E.		
SCALE NOT TO SCALE		SD 7-01

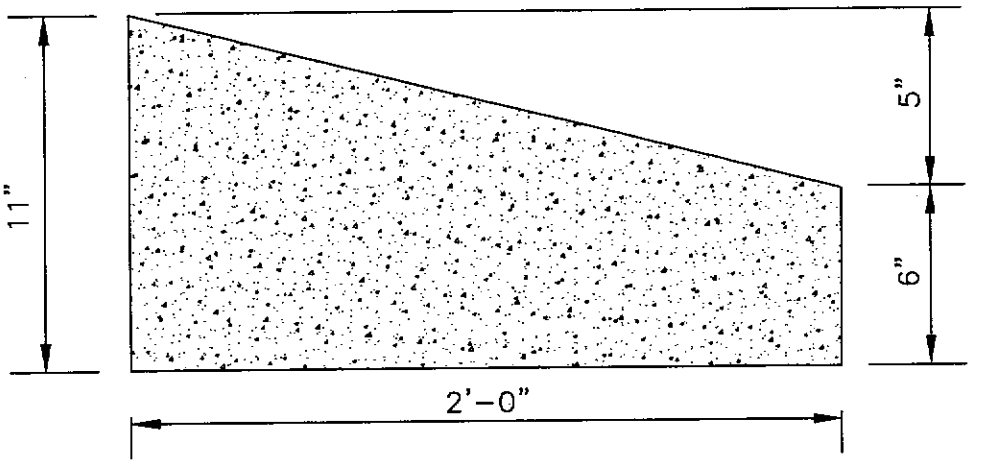

	STANDARD DETAIL	CITY OF WILMINGTON ENGINEERING OFFICE 305 CHESTNUT STREET PO. BOX 1810 WILMINGTON N.C. 28402 (910) 341-7807
DATE: 2001	CURB SECTION TYPE "D"	
DRAWN BY JSR/CMR		
CHECKED BY B.P., P.E.		
SCALE NOT TO SCALE		SD 7-02

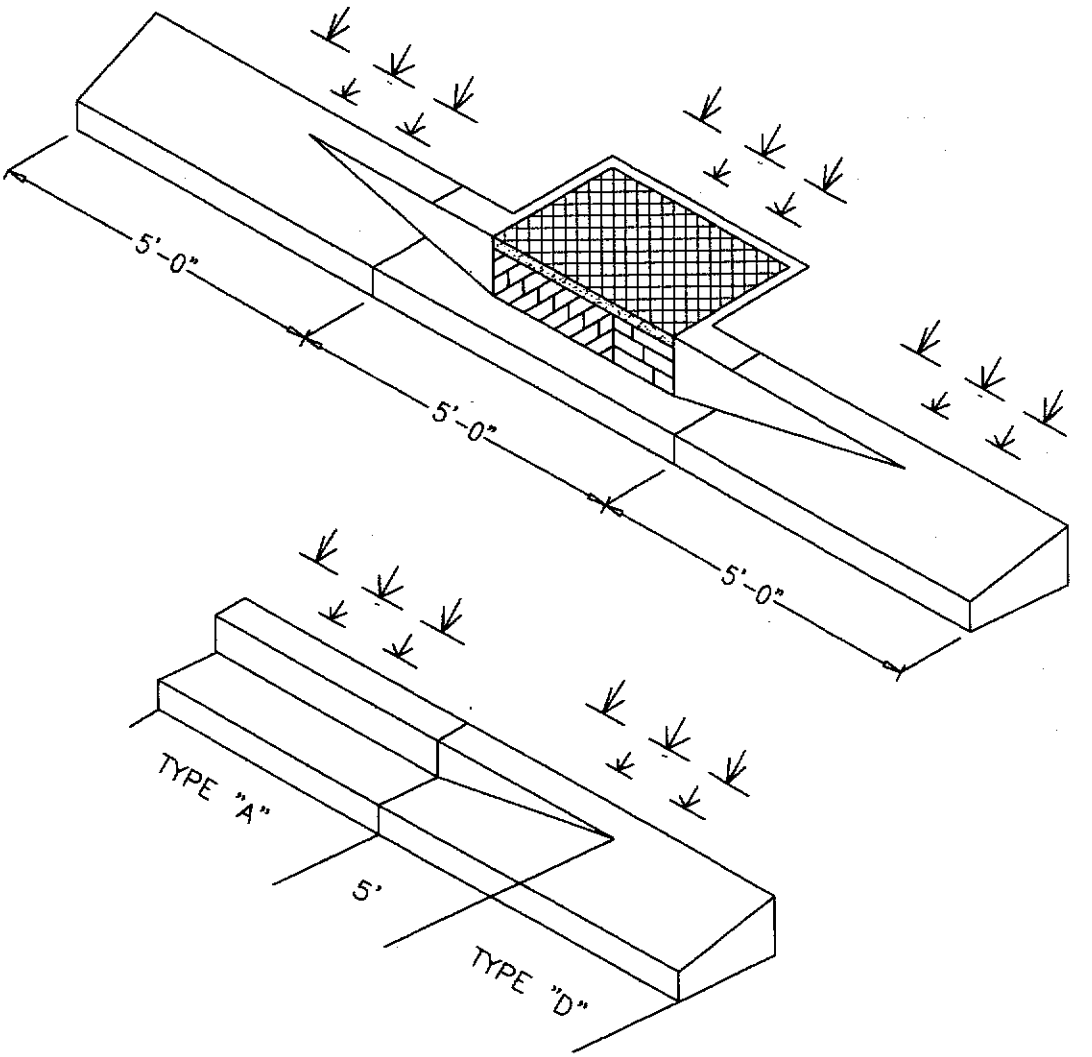

	STANDARD DETAIL	CITY OF WILMINGTON ENGINEERING OFFICE 305 CHESTNUT STREET PO. BOX 1810 WILMINGTON N.C. 28402 (910) 341-7807
DATE: 2001	STANDARD TRANSITION TYPE "D" CURB	
DRAWN BY JSR/CMR		
CHECKED BY B.P., P.E.		
SCALE NOT TO SCALE		SD 7-03

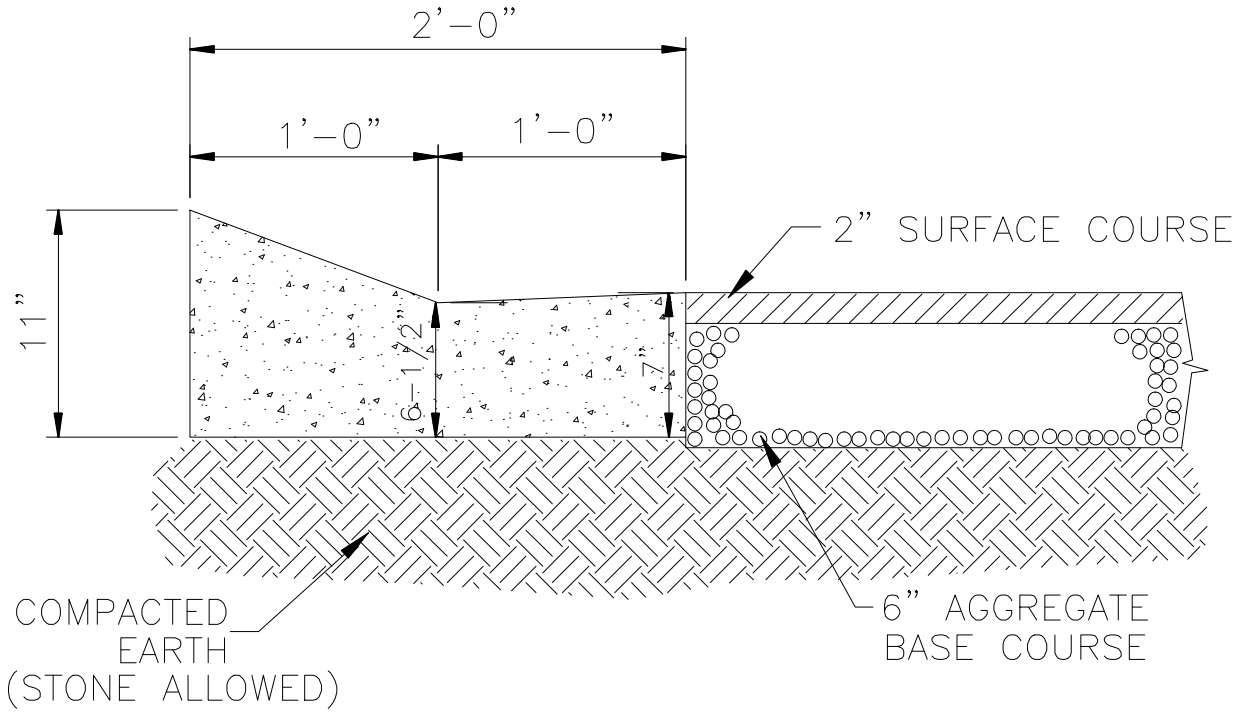

TYPE "H" CURB AND GUTTER

SD 7-04

	STANDARD DETAIL	CITY OF WILMINGTON ENGINEERING OFFICE 305 CHESTNUT STREET PO. BOX 1810 WILMINGTON N.C. 28402 (910) 341-7807
DATE: 2007	**CURB AND GUTTER TYPE "H"**	
DRAWN BY JSR/CMR		
CHECKED BY B.P., P.E.		
SCALE NOT TO SCALE		**SD 7-04**

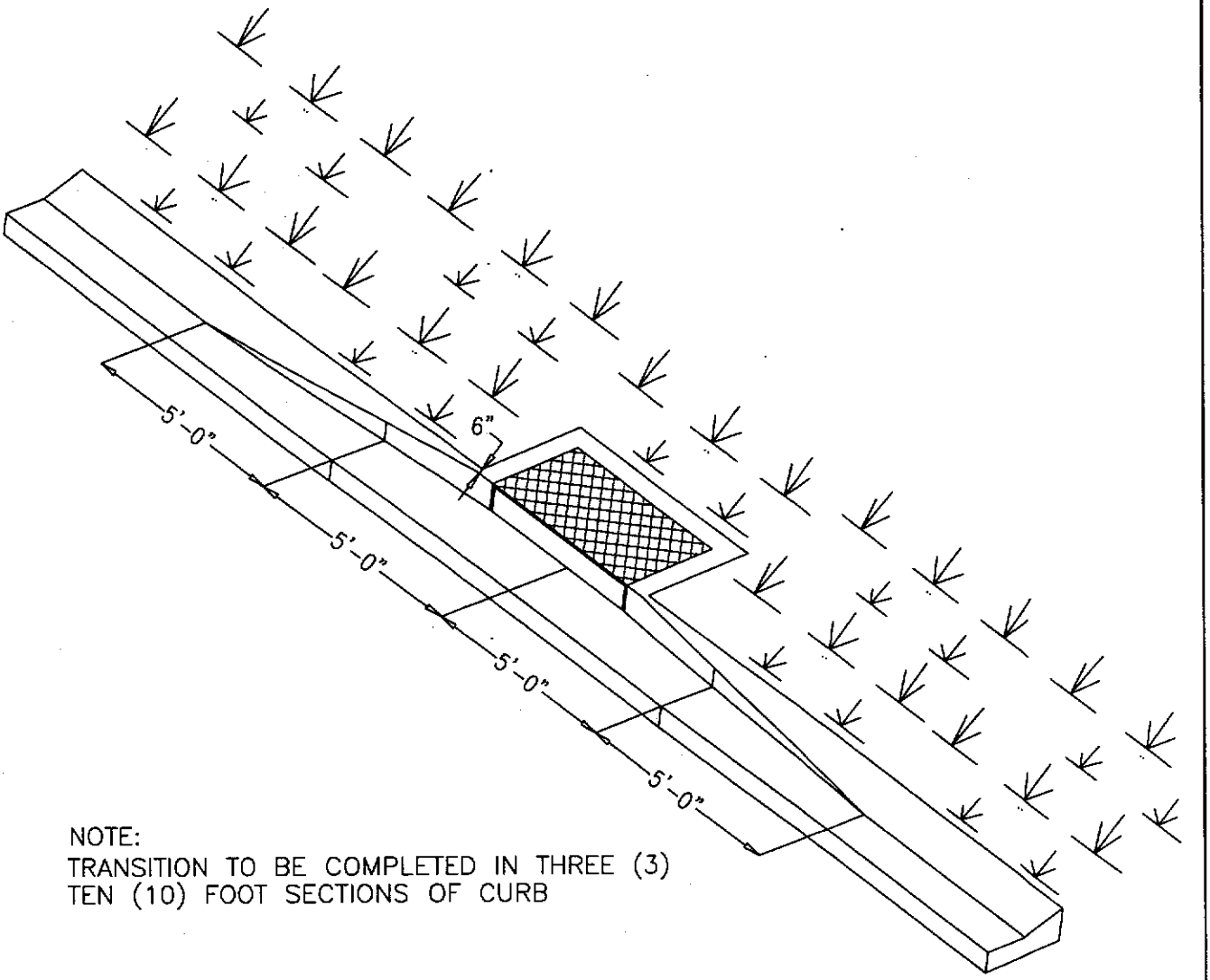

NOTE:
TRANSITION TO BE COMPLETED IN THREE (3)
TEN (10) FOOT SECTIONS OF CURB

	STANDARD DETAIL	CITY OF WILMINGTON ENGINEERING OFFICE 305 CHESTNUT STREET PO. BOX 1810 WILMINGTON N.C. 28402 (910) 341-7807
DATE: 2001	TYPE "H" CURBING AROUND FACE BASIN TRANSITION SECTION	
DRAWN BY JSR/CMR		
CHECKED BY B.P., P.E.		
SCALE NOT TO SCALE		SD 7-05

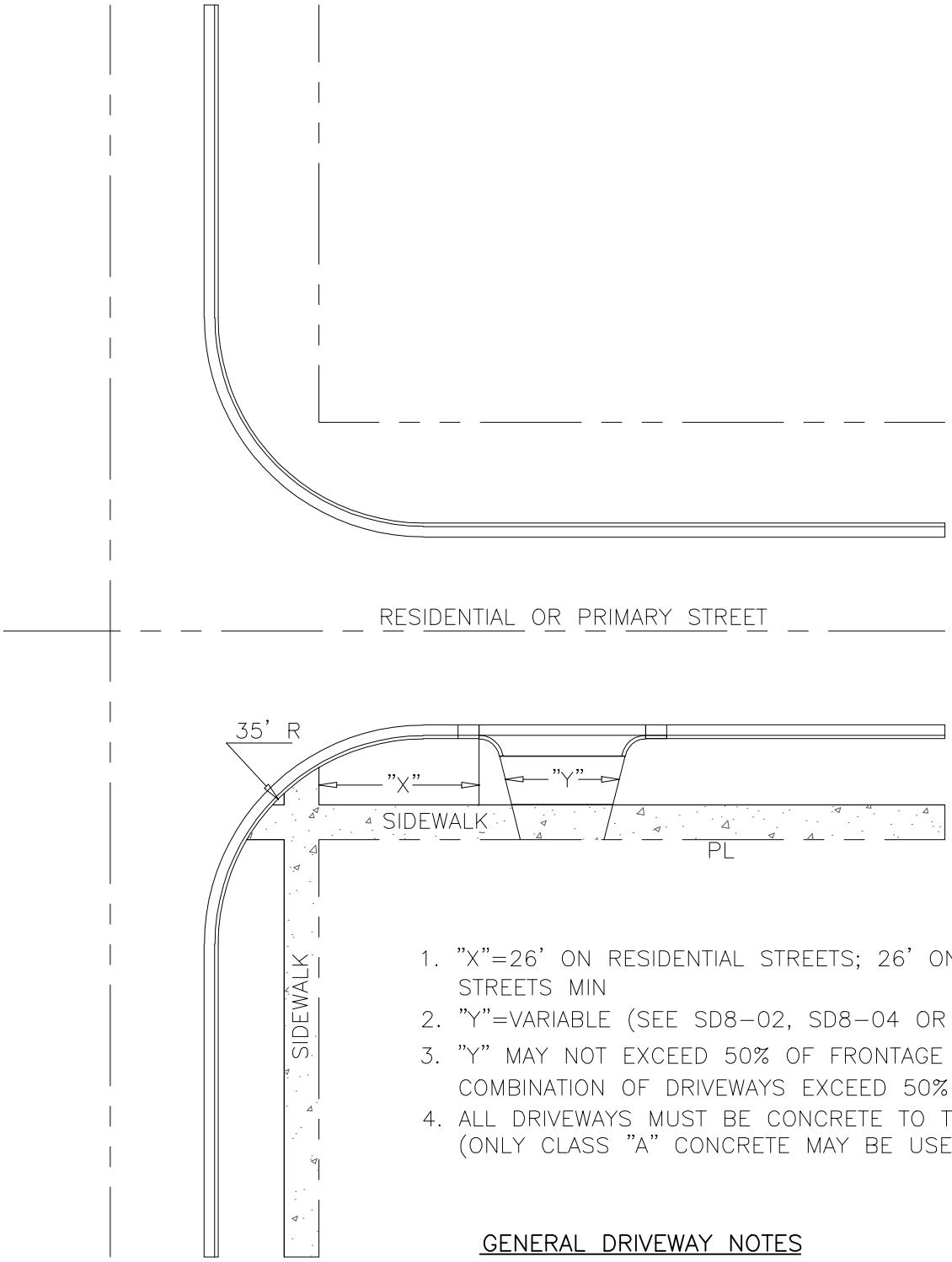

1. "X"=26' ON RESIDENTIAL STREETS; 26' ON PRIMARY STREETS MIN
2. "Y"=VARIABLE (SEE SD8-02, SD8-04 OR SD8-05)
3. "Y" MAY NOT EXCEED 50% OF FRONTAGE NOR MAY ANY COMBINATION OF DRIVEWAYS EXCEED 50% OF FRONTAGE
4. ALL DRIVEWAYS MUST BE CONCRETE TO THE PL (ONLY CLASS "A" CONCRETE MAY BE USED)

GENERAL DRIVEWAY NOTES
SD 8-07

	STANDARD DETAIL	CITY OF WILMINGTON ENGINEERING OFFICE 305 CHESTNUT STREET PO. BOX 1810 WILMINGTON N.C. 28402 (910) 341-7807
DATE: 2001	GENERAL DRIVEWAY NOTES	
DRAWN BY JSR/CMR		
CHECKED BY B.P., P.E.		
SCALE NOT TO SCALE		SD 8-07

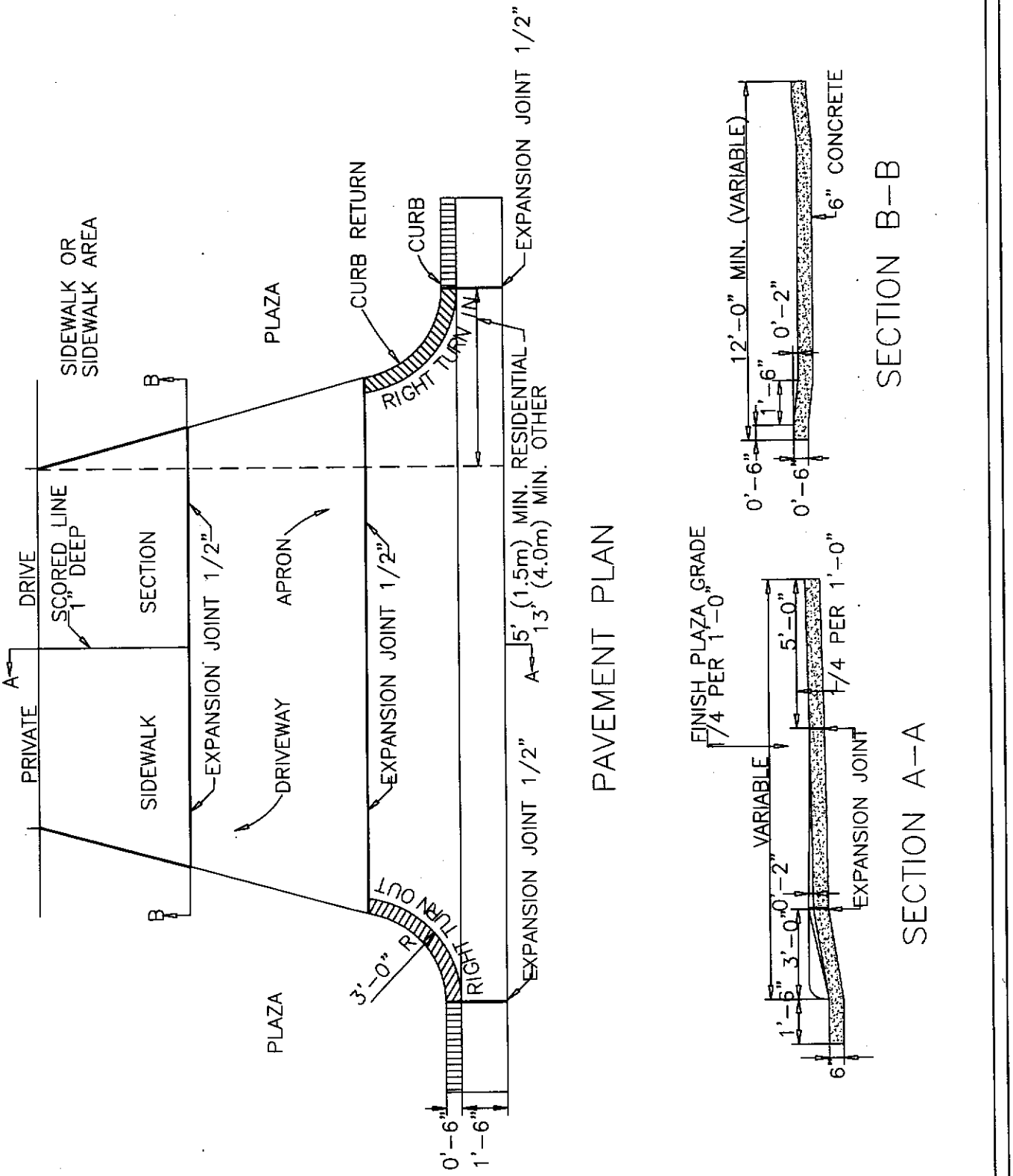

	STANDARD DETAIL	CITY OF WILMINGTON ENGINEERING OFFICE 305 CHESTNUT STREET PO. BOX 1810 WILMINGTON N.C. 28402 (910) 341-7807
DATE: 2001	STANDARD DRIVEWAY DETAIL	
DRAWN BY JSR/CMR		
CHECKED BY B.P., P.E.		
SCALE NOT TO SCALE		SD 8-02

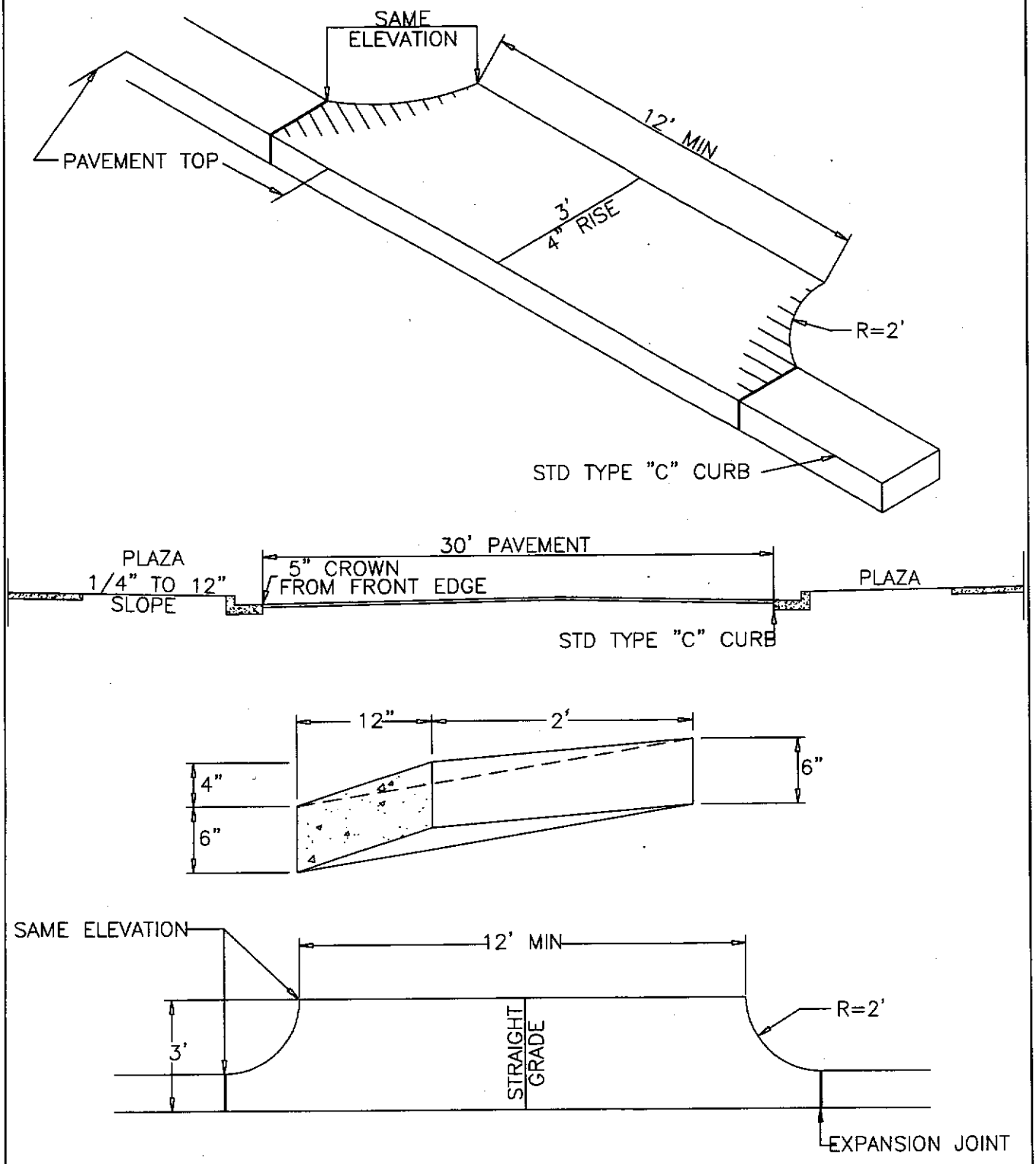

	STANDARD DETAIL	CITY OF WILMINGTON ENGINEERING OFFICE 305 CHESTNUT STREET PO. BOX 1810 WILMINGTON N.C. 28402 (910) 341-7807
DATE: 2001	TYPICAL SLOPE FACE CURB DRIVE ENTRANCE	
DRAWN BY JSR/CMR		
CHECKED BY B.P., P.E.		
SCALE NOT TO SCALE		SD 8-03

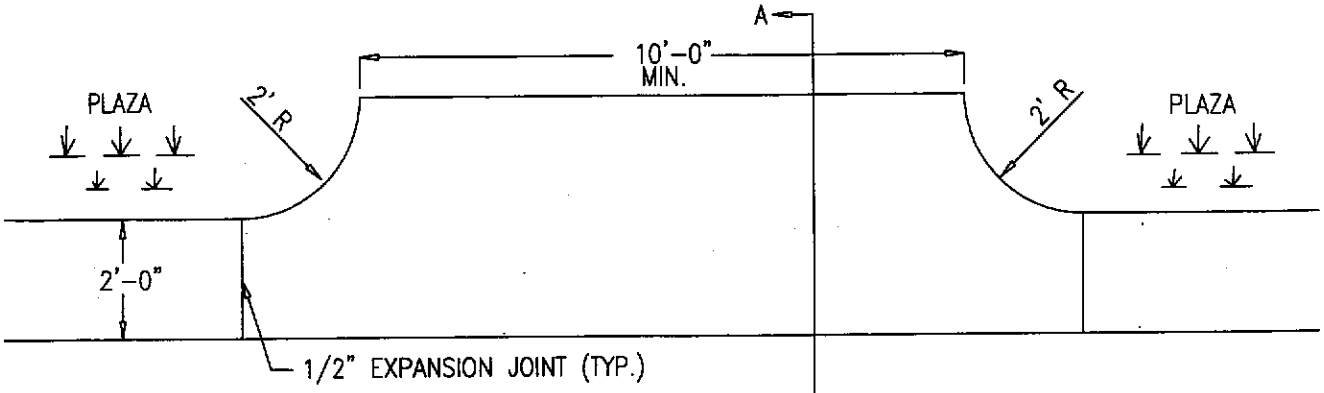

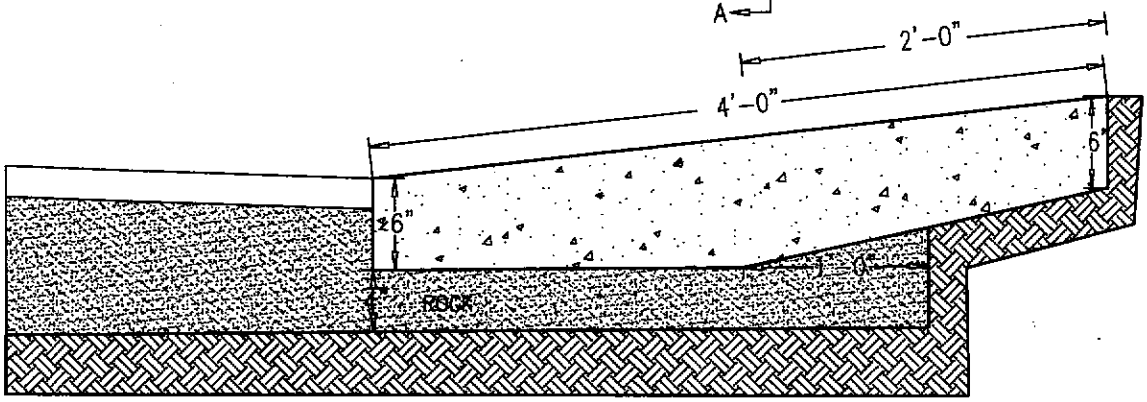

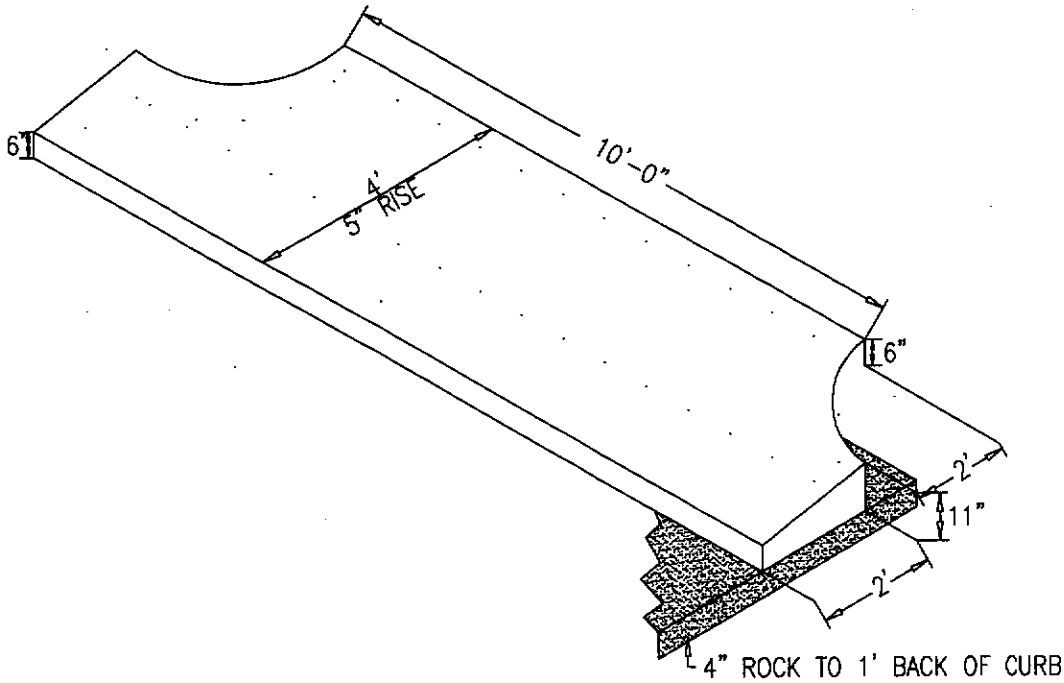

	STANDARD DETAIL	CITY OF WILMINGTON ENGINEERING OFFICE 305 CHESTNUT STREET PO. BOX 1810 WILMINGTON N.C. 28402 (910) 341-7807
DATE: 2001	TYPE "D" CURB DRIVEWAY ENTRANCE WITH 2' RADIUS	
DRAWN BY JSR/CMR		
CHECKED BY B.P., P.E.		
SCALE NOT TO SCALE		SD 8-01

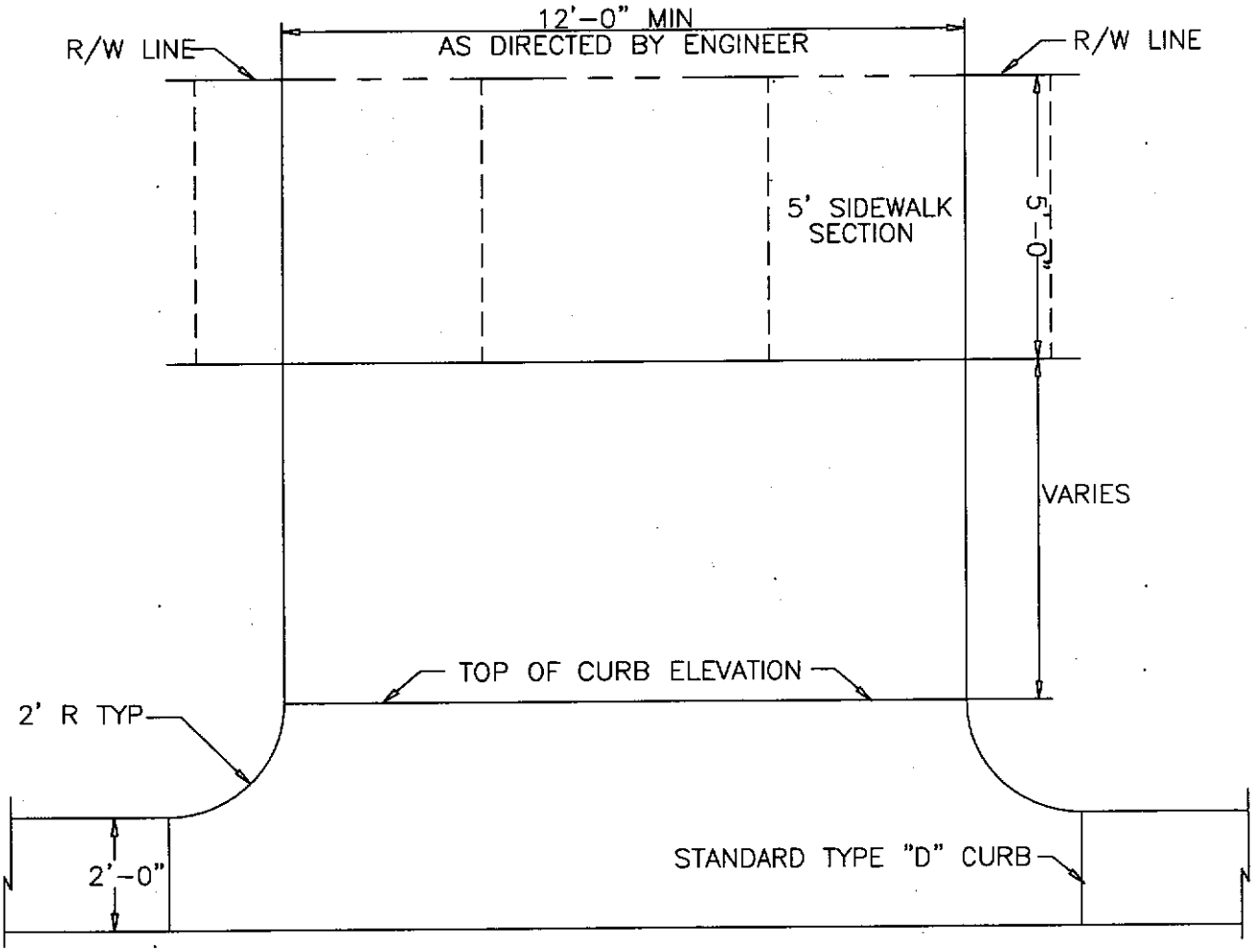

	STANDARD DETAIL	CITY OF WILMINGTON ENGINEERING OFFICE 305 CHESTNUT STREET PO. BOX 1810 WILMINGTON N.C. 28402 (910) 341-7807
DATE: 2001	TYPICAL DRIVEWAY WITH TYPE "D" CURB	
DRAWN BY JSR/CMR		
CHECKED BY B.P., P.E.		
SCALE NOT TO SCALE		SD 8-06

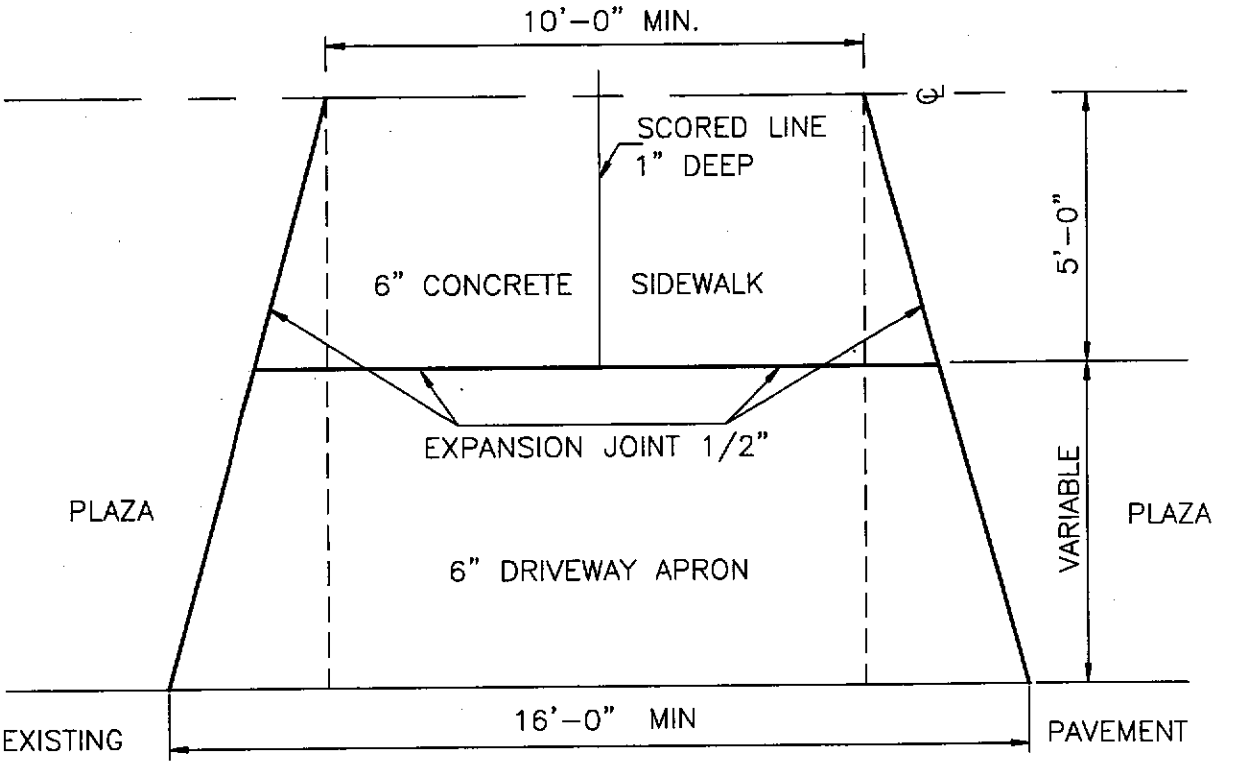

PLAN

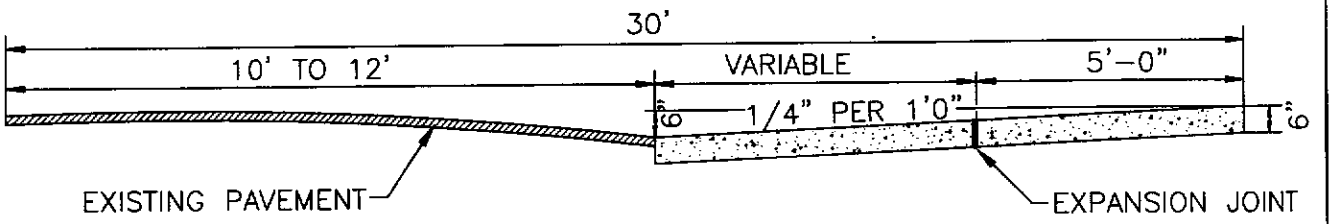

SECTION A-A

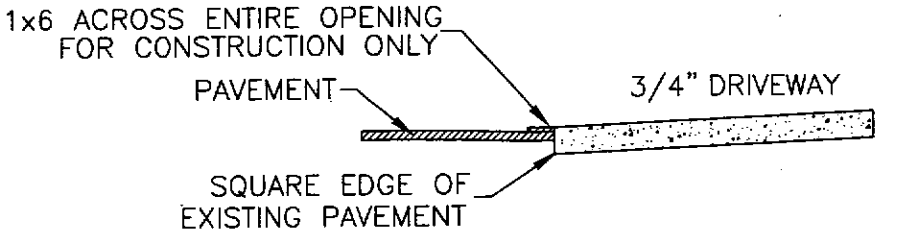

FORMING DETAIL

	STANDARD DETAIL	CITY OF WILMINGTON ENGINEERING OFFICE 305 CHESTNUT STREET PO. BOX 1810 WILMINGTON N.C. 28402 (910) 341-7807
DATE: 2001	RESIDENTIAL DRIVEWAY STREETS WITH NO CURB	
DRAWN BY JSR/CMR		
CHECKED BY B.P., P.E.		
SCALE NOT TO SCALE		SD 8-05

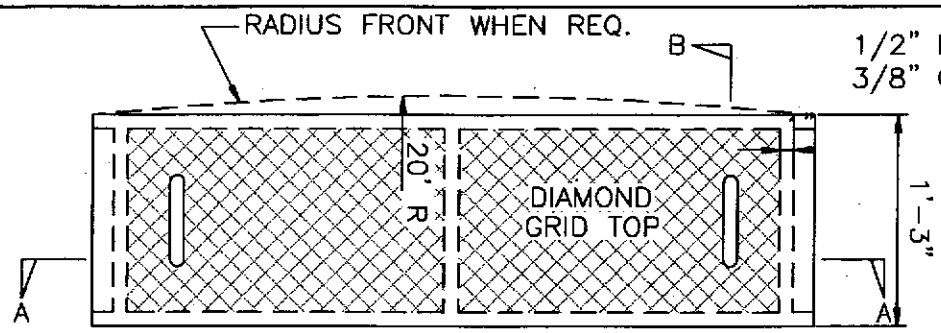

PLAN OF COVER

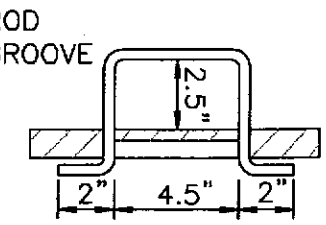

DETAIL OF HANDLE

MINIMUM AVERAGE WEIGHT
FRAME (EACH) 65LBS.
COVER (RADIUS) 225 LBS.
COVER (STR.) 225 LBS.

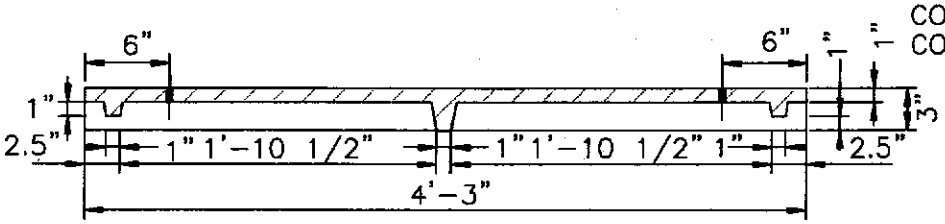

SECTION "A-A"

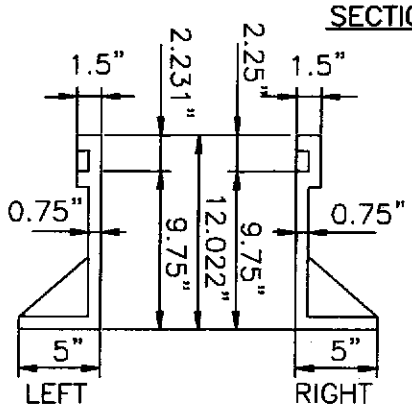

ENDS

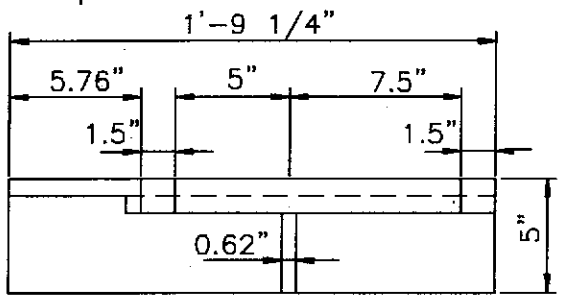

TOP VIEW

3/4" HOLES

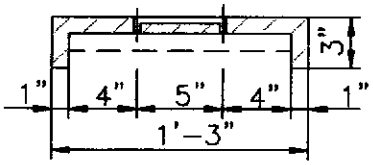

SECTION "B-B"

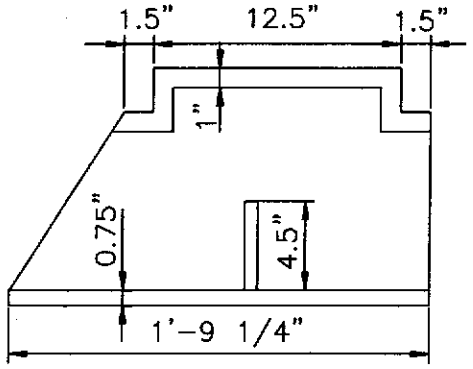

SIDE

CATCH BASIN CASTINGS
SD 2-16

	STANDARD DETAIL	
DATE: 2001	CATCH BASIN CASTINGS DETAIL	CITY OF WILMINGTON ENGINEERING OFFICE 305 CHESTNUT STREET PO. BOX 1810 WILMINGTON N.C. 28402 (910) 341-7807
DRAWN BY JSR/CMR		
CHECKED BY B.P., P.E.		
SCALE NOT TO SCALE		SD 2-16

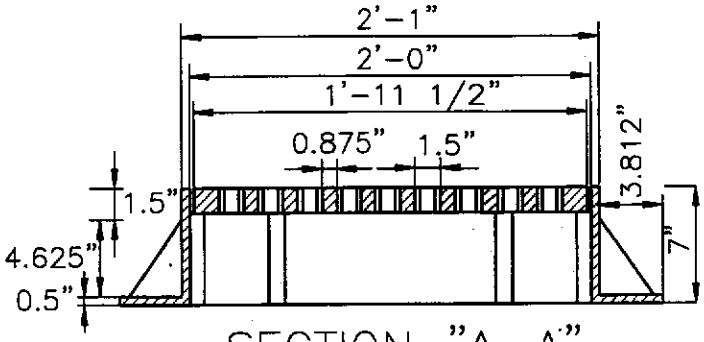

SECTION "A-A"

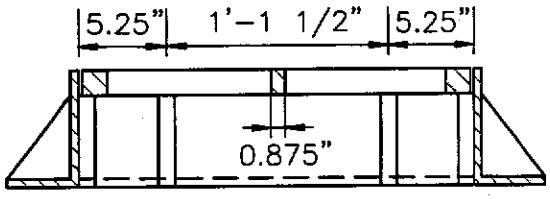

SECTION "B-B"

MINIMUM AVERAGE WEIGHT
FRAME 195 LBS.
GRATE 145 LBS.

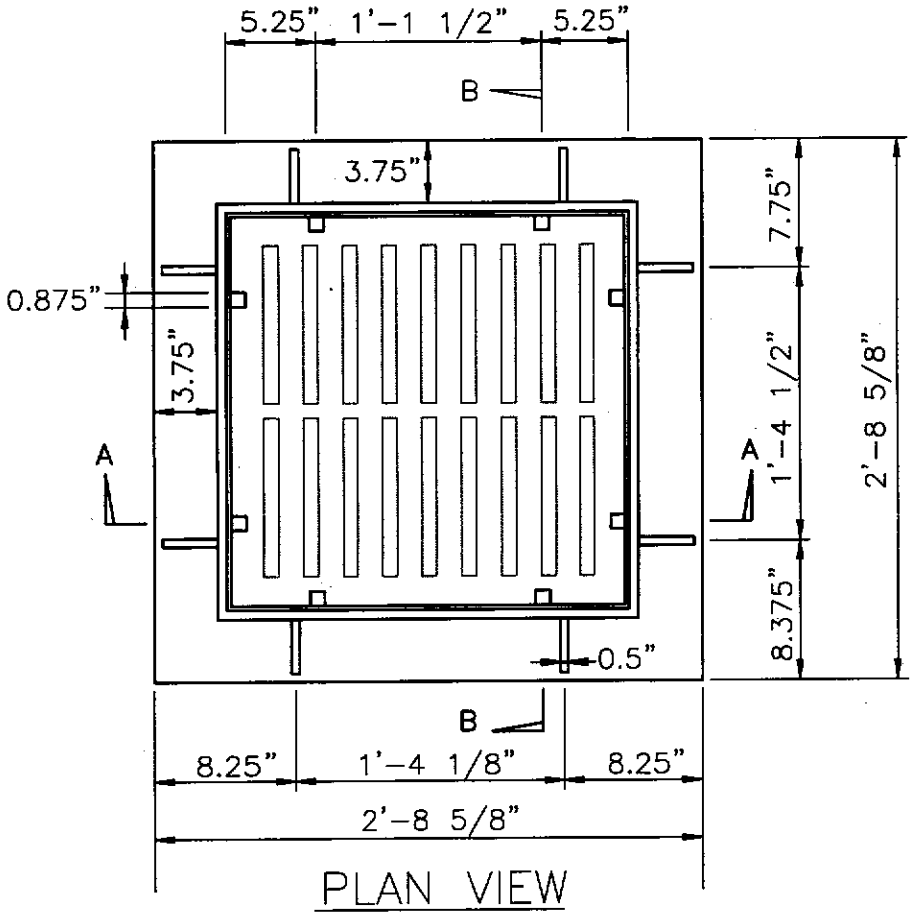

PLAN VIEW

	STANDARD DETAIL	CITY OF WILMINGTON ENGINEERING OFFICE 305 CHESTNUT STREET PO. BOX 1810 WILMINGTON N.C. 28402 (910) 341-7807
DATE: 2001	GRILL BASIN CASTINGS	
DRAWN BY JSR/CMR		
CHECKED BY B.P., P.E.		
SCALE NOT TO SCALE		SD 14-04

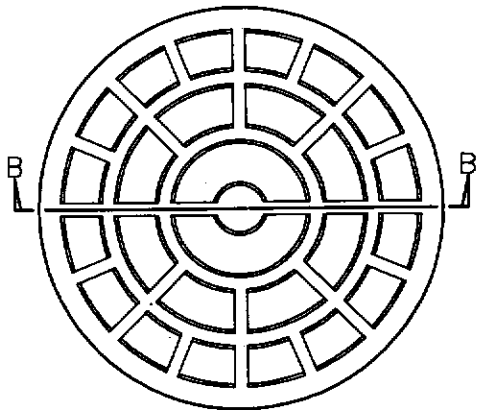

TOP VIEW

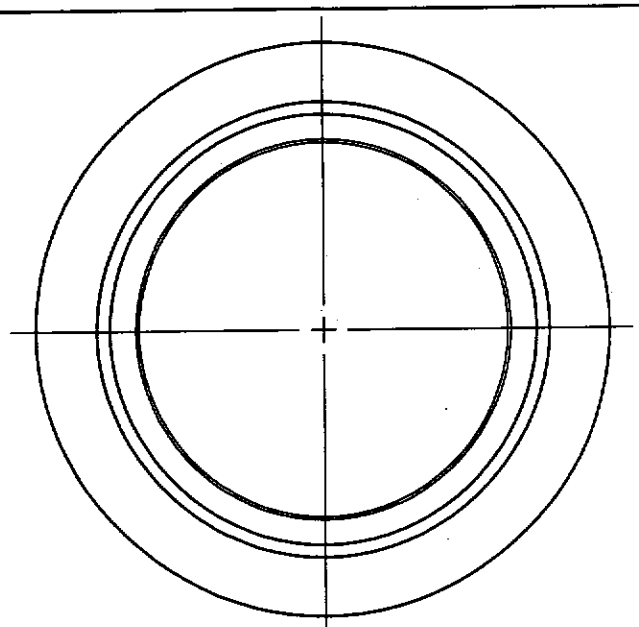

TOP VIEW

SECTION 'A–A'

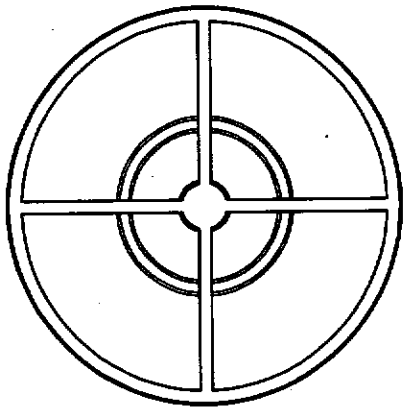

BOTTOM

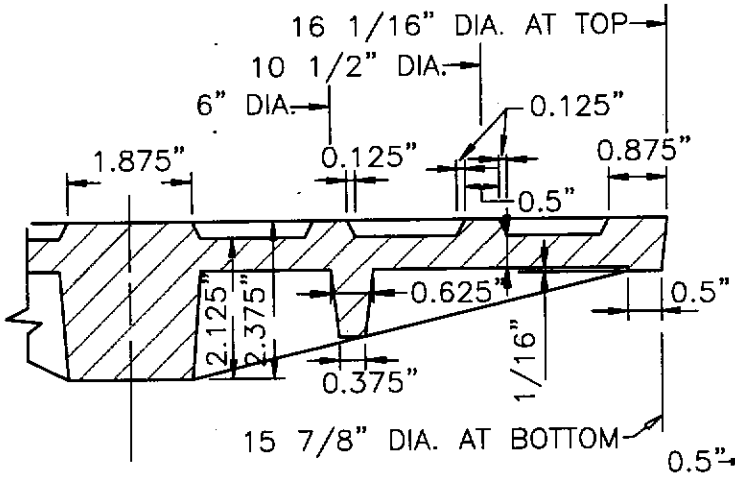

PART OF SECTION

ENLARGED

DEWEY BROS. NO. MH–VA–1

MINIMUM AVERAGE WEIGHT

RING 96 LBS.

COVER 40 LBS.

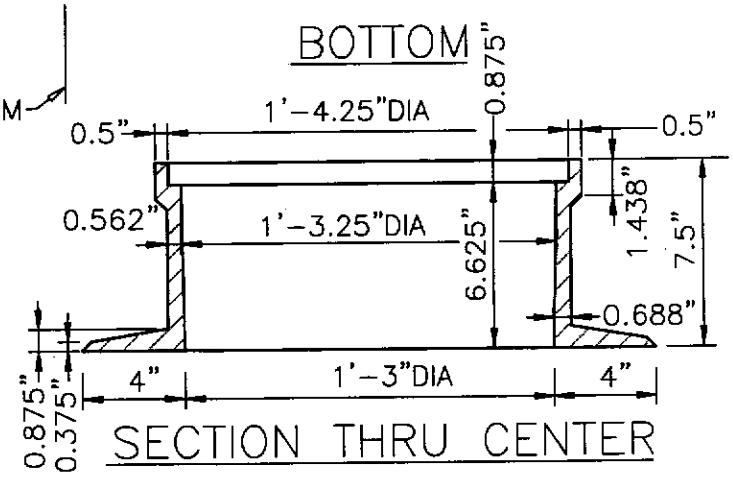

SECTION THRU CENTER

	STANDARD DETAIL	CITY OF WILMINGTON ENGINEERING OFFICE 305 CHESTNUT STREET PO. BOX 1810 WILMINGTON N.C. 28402 (910) 341-7807
DATE: 2001	MONUMENT DETAIL	
DRAWN BY JSR/CMR		
CHECKED BY B.P., P.E.		
SCALE NOT TO SCALE		SD 14–05

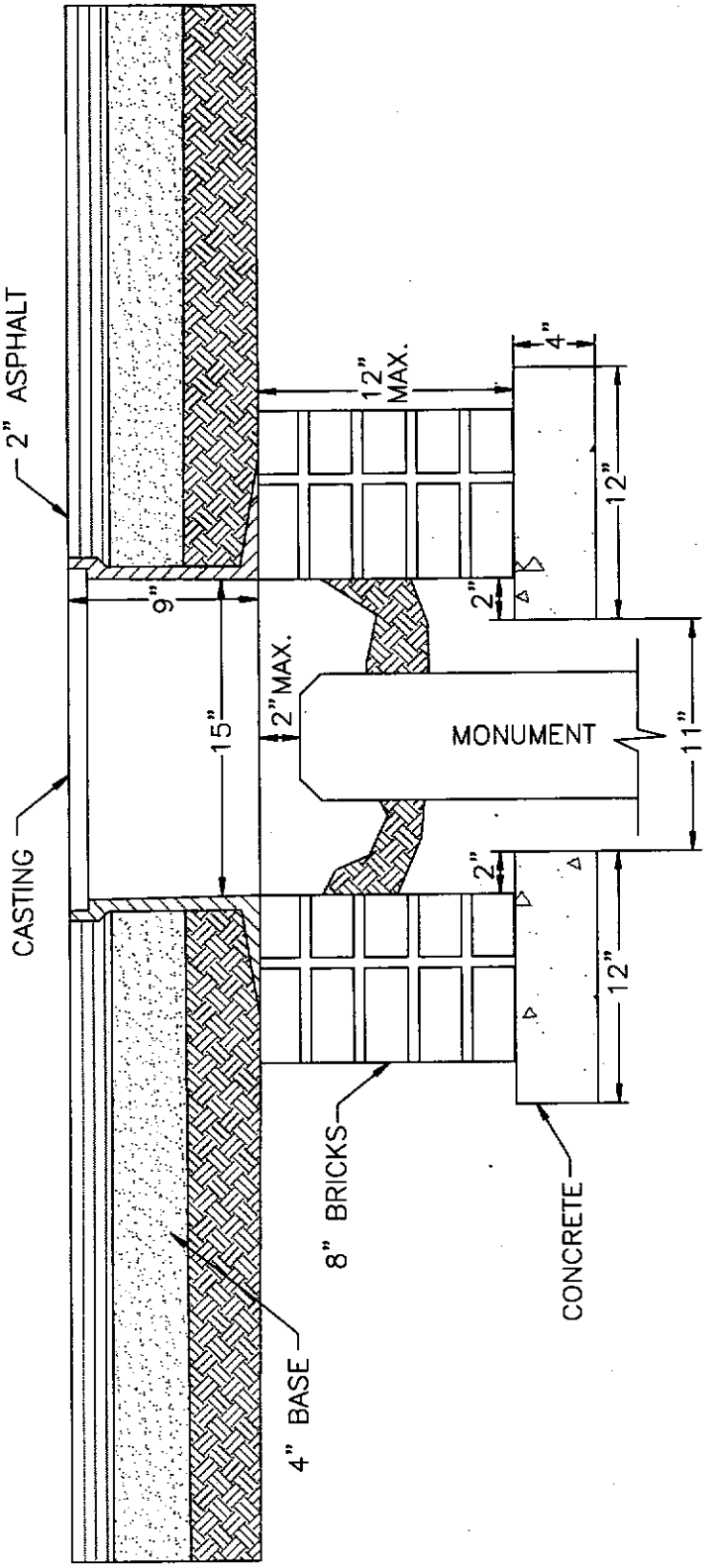

	STANDARD DETAIL	CITY OF WILMINGTON ENGINEERING OFFICE 305 CHESTNUT STREET PO. BOX 1810 WILMINGTON N.C. 28402 (910) 341-7807
DATE: 2001	MONUMENT CASTING AND BASE	
DRAWN BY JSR/CMR		
CHECKED BY B.P., P.E.		
SCALE NOT TO SCALE		SD 15-01

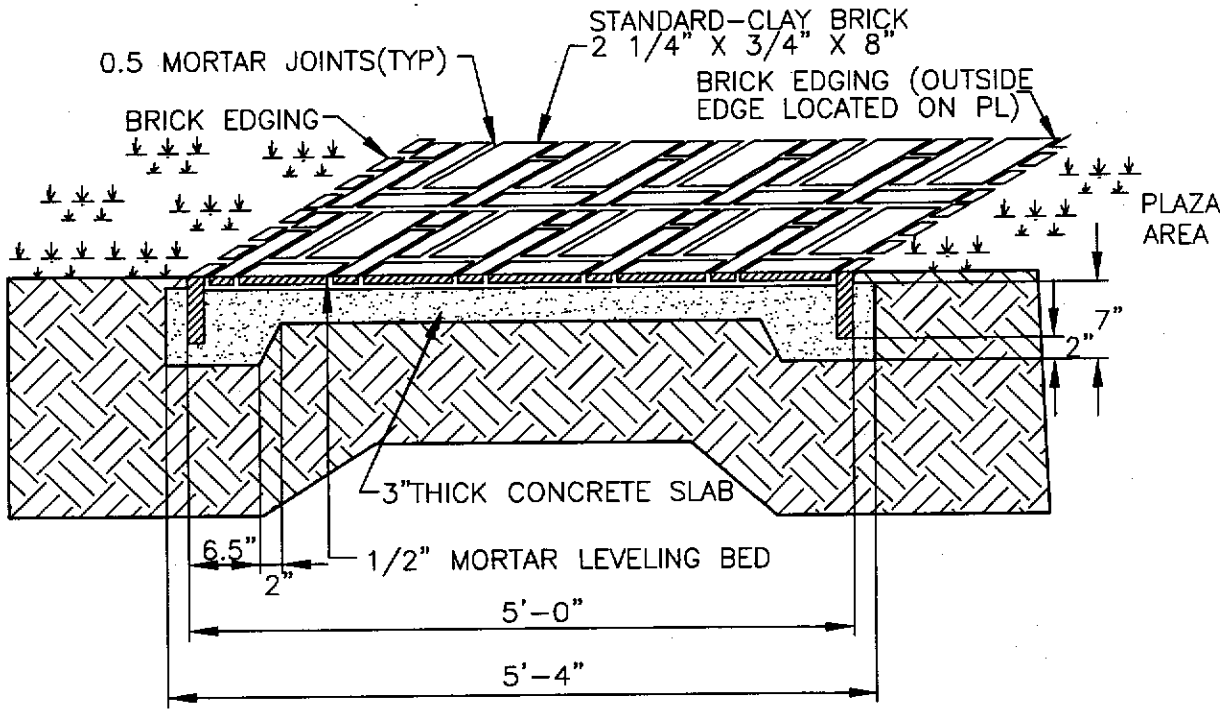

	STANDARD DETAIL	CITY OF WILMINGTON ENGINEERING OFFICE 305 CHESTNUT STREET PO. BOX 1810 WILMINGTON N.C. 28402 (910) 341-7807
DATE: 2001	GUIDELINES FOR BRICK SIDEWALK	
DRAWN BY JSR/CMR		
CHECKED BY B.P., P.E.		
SCALE NOT TO SCALE		SD 8-08

GENERAL NOTES

1. In accordance with N.C.G.S. 136-44.14, all street curbs being constructed or reconstructed shall provide wheelchair ramps for the physically handicapped on each side of any street or road, where curbs and sidewalks are provided and at other major points of pedestrian flow.
2. Wheelchair ramps shall be located as indicated in detail drawings; however, existing light poles, fire hydrants, drop inlets, etc. may affect placement.
3. Curb ramps shall have detectable warnings extending the full width of the ramp and a minimum of 2-ft. in length.

CONSTRUCTION NOTES

1. Construction shall conform with construction standards of the governing body which has jurisdiction of the particular street.
2. Wheelchair ramps shall be constructed of Class "A" concrete with the surface having a rough, non-skid type finish.
3. A ½-in. expansion joint shall be required where the concrete wheelchair ramp joins any rigid pavement or structure.
4. In no case shall the width of a curb ramp or curb cut be less than 40-in. (3-ft, 4-in.), not including the flared sides.
5. Transitions from ramps to walks, gutters or streets shall be flush and free of abrupt changes.
6. The maximum slope on the curb ramp run is 1:12.
7. The maximum cross slope of the curb ramp is 1:50.
8. Maximum slopes of adjoining gutters, road surface immediately adjacent to the curb ramp, or accessible route shall not exceed 1:20.
9. Any raised islands in crossings shall be cut through level with the street or have curb ramps at both sides and a level area at least 48-in. long between the curb ramps.
10. Detectable warnings shall consist of raised truncated domes with a diameter of nominal 0.9-in., a height of nominal 0.2-in. and a center-to-center spacing of nominal 2.35-in. and shall contrast visually with adjoining surfaces, either light-on-dark, or dark-on-light.

ADDITIONAL NOTES

1. Stop bars shall be used where it is important to indicate the point behind which vehicles are required to stop in compliance with a traffic signal, stop sign or other legal requirement.
2. Parking shall be eliminated a minimum of 20 feet back of the pedestrian crosswalk.
3. All pavement markings shall be in accordance with the latest edition of the Manual of Uniform Traffic Control Devices, published by the Federal Highway Administration. This document is available from the Superintendent of Documents, U.S. Government Printing Office, Washington, D.C. 20402.
4. Curb ramps at marked crossings shall be wholly contained within the markings, excluding any flared sides.
5. The bottom of diagonal (corner type) curb ramps at marked crossings shall have 48-in. minimum clear space within the markings.
6. If diagonal curb ramps have flared sides, they shall have at least a 24-in. long segment of straight curb located on each side of the curb ramp and within the marked crossing.

	STANDARD DETAIL	
DATE: 2/28/2008	GUIDELINES FOR WHEELCHAIR RAMPS	CITY OF WILMINGTON ENGINEERING OFFICE 305 CHESTNUT STREET PO. BOX 1810 WILMINGTON N.C. 28402 (910) 341-7807
DRAWN BY J. RHYNE		
CHECKED BY AMS, P.E.		
SCALE NOT TO SCALE		SD 8-09

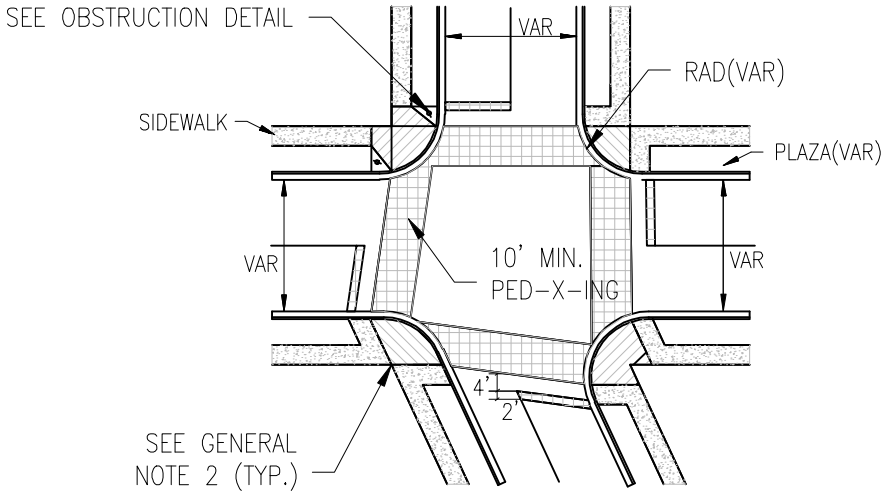

TYPICAL LOCATION OF WHEELCHAIR RAMP

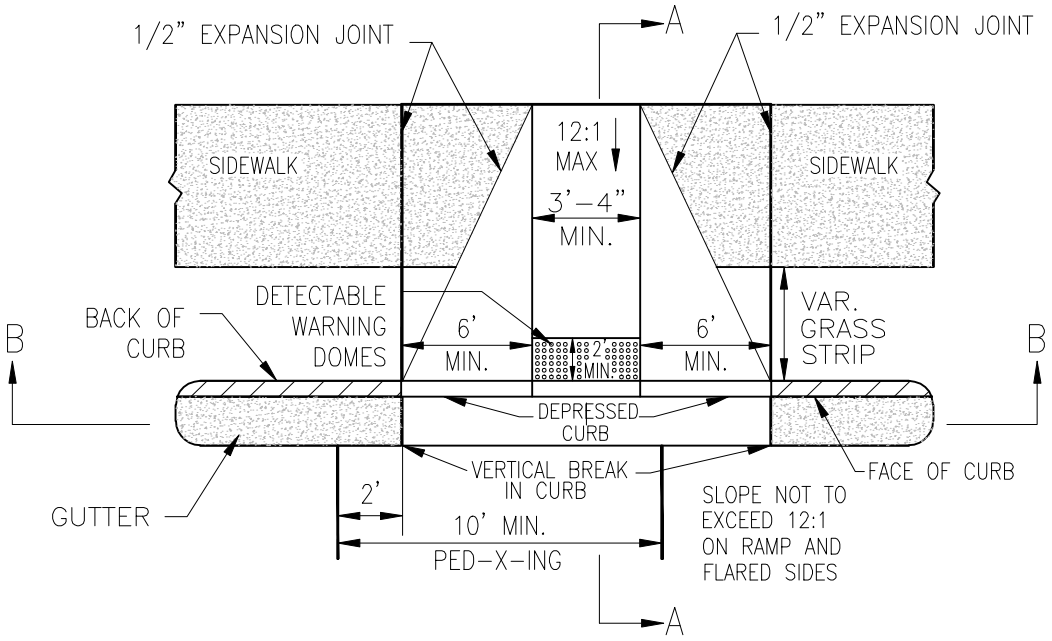

PLAN VIEW WHEELCHAIR RAMP

GUIDELINES FOR WHEELCHAIR RAMPS
& DEPRESSED CURBS

SD 8-10

	STANDARD DETAIL	CITY OF WILMINGTON ENGINEERING OFFICE 305 CHESTNUT STREET PO. BOX 1810 WILMINGTON N.C. 28402 (910) 341-7807
DATE: 2/29/2008	**GUIDELINES FOR WHEELCHAIR RAMPS & DEPRESSED CURBS SHEET 1 OF 2**	
DRAWN BY J. RHYNE		
CHECKED BY AMS, P.E.		
SCALE NOT TO SCALE		SD 8-10

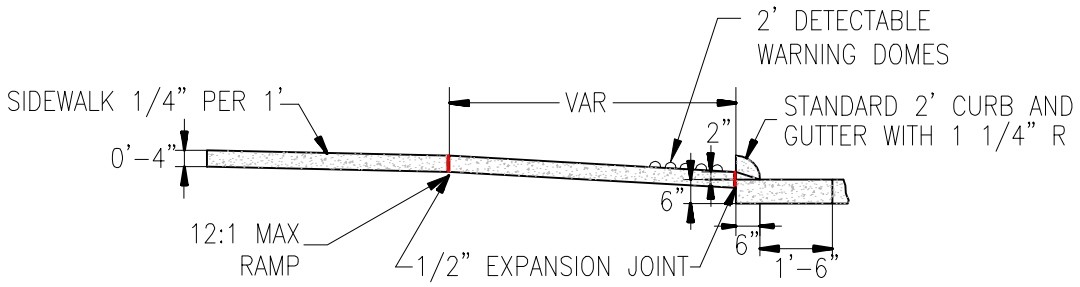

SECTION A–A

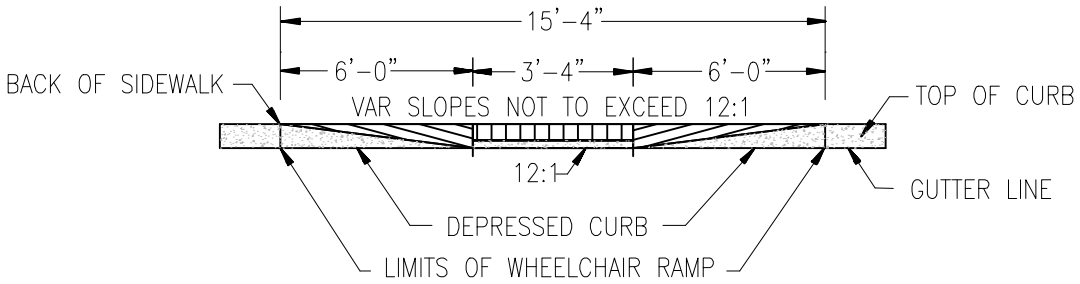

SECTION B–B

	STANDARD DETAIL	CITY OF WILMINGTON ENGINEERING OFFICE 305 CHESTNUT STREET PO. BOX 1810 WILMINGTON N.C. 28402 (910) 341–7807
DATE: 2/29/2008	**GUIDELINES FOR WHEELCHAIR RAMPS & DEPRESSED CURBS SHEET 2 OF 2**	
DRAWN BY J. RHYNE		
CHECKED BY AMS, P.E.		
SCALE NOT TO SCALE		**SD 8-10**

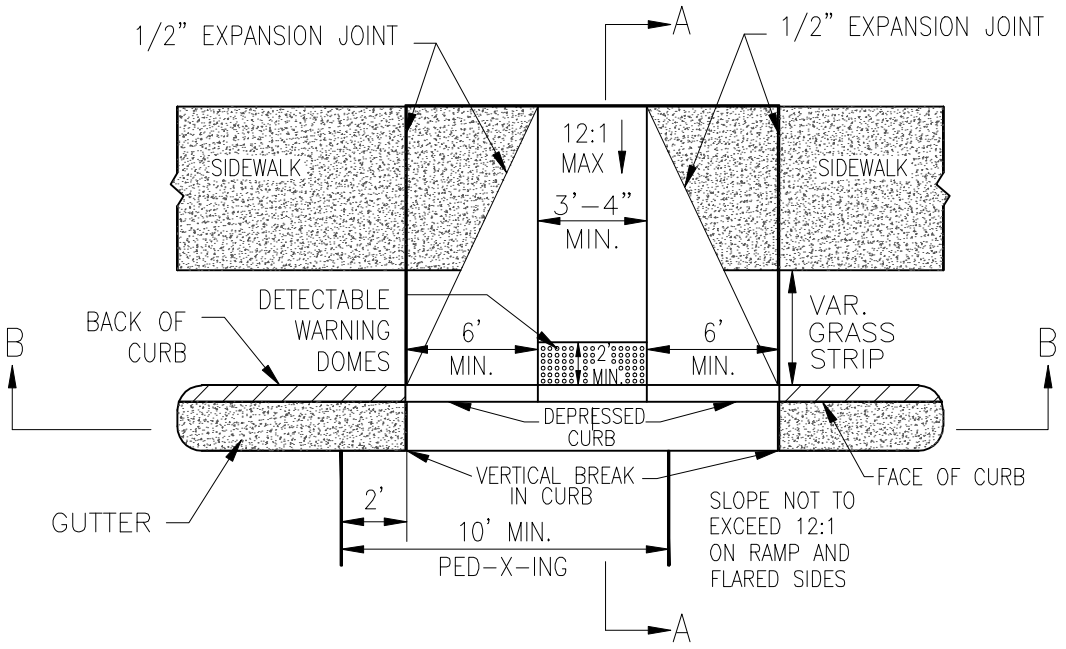

PLAN VIEW WHEELCHAIR RAMP

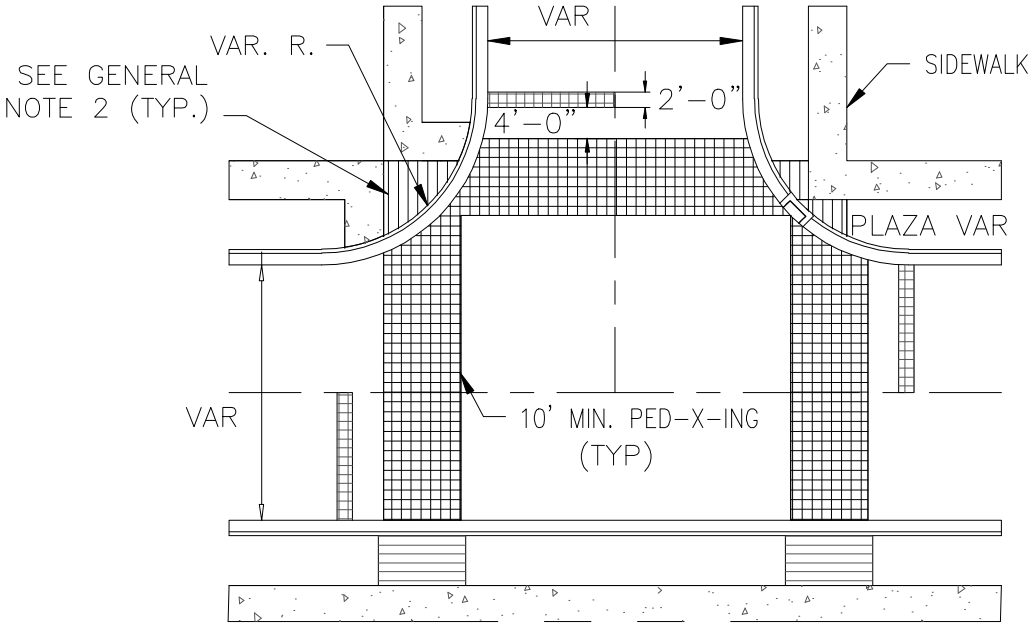

TYPICAL LOCATION OF WHEELCHAIR RAMPS, PEDESTRIAN CROSS WALKS & STOP BARS FOR TEE INTERSECTION

GUIDELINES FOR WHEELCHAIR RAMPS
& DEPRESSED CURBS

SD 8-11

	STANDARD DETAIL	CITY OF WILMINGTON ENGINEERING OFFICE 305 CHESTNUT STREET PO. BOX 1810 WILMINGTON N.C. 28402 (910) 341-7807
DATE: 2/29/2008	**GUIDELINE FOR WHEELCHAIR RAMPS & DEPRESSED CURBS SHEET 1 OF 2**	
DRAWN BY J. RHYNE		
CHECKED BY AMS, P.E.		
SCALE NOT TO SCALE		SD 8-11

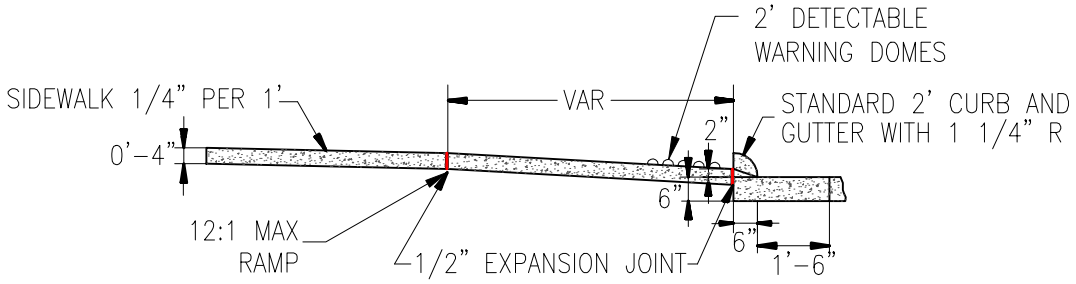

SECTION A–A

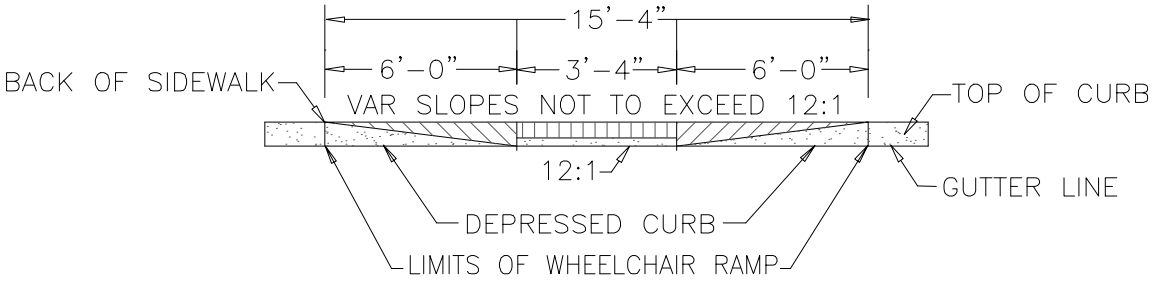

SECTION B–B

	STANDARD DETAIL	CITY OF WILMINGTON ENGINEERING OFFICE 305 CHESTNUT STREET PO. BOX 1810 WILMINGTON N.C. 28402 (910) 341–7807
DATE: 2/29/2008	**GUIDELINE FOR WHEELCHAIR RAMPS & DEPRESSED CURBS SHEET 2 OF 2**	
DRAWN BY J. RHYNE		
CHECKED BY AMS, P.E.		
SCALE NOT TO SCALE		SD 8-11

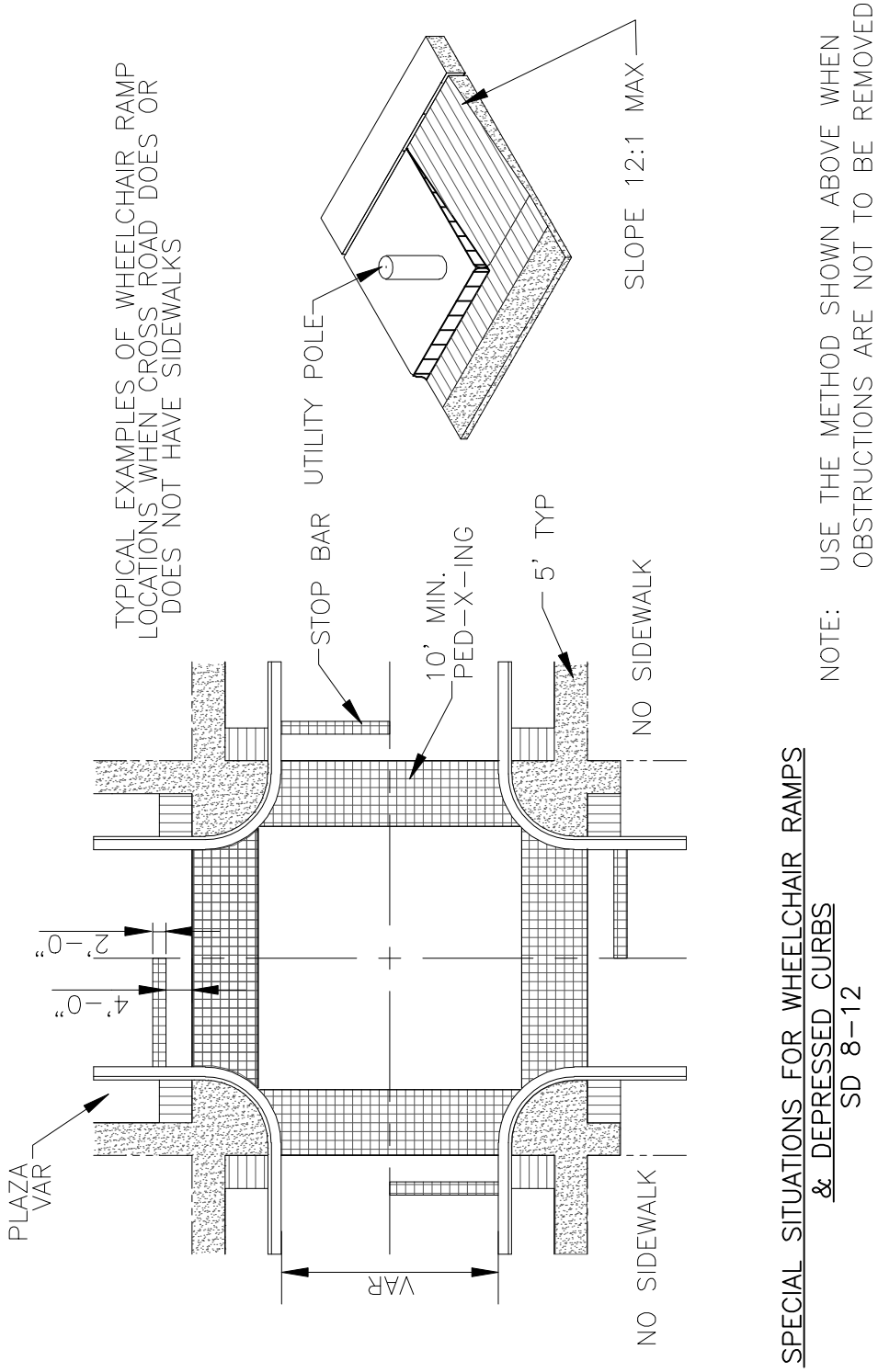

NOTE: USE THE METHOD SHOWN ABOVE WHEN OBSTRUCTIONS ARE NOT TO BE REMOVED

SPECIAL SITUATIONS FOR WHEELCHAIR RAMPS & DEPRESSED CURBS
SD 8-12

	STANDARD DETAIL	CITY OF WILMINGTON ENGINEERING OFFICE 305 CHESTNUT STREET PO. BOX 1810 WILMINGTON N.C. 28402 (910) 341-7807
DATE: 2/29/2008	SPECIAL SITUATIONS FOR WHEELCHAIR RAMPS AND DEPRESSED CURBS SHEET 1 OF 2	
DRAWN BY J. RHYNE		
CHECKED BY AMS, P.E.		
SCALE NOT TO SCALE		

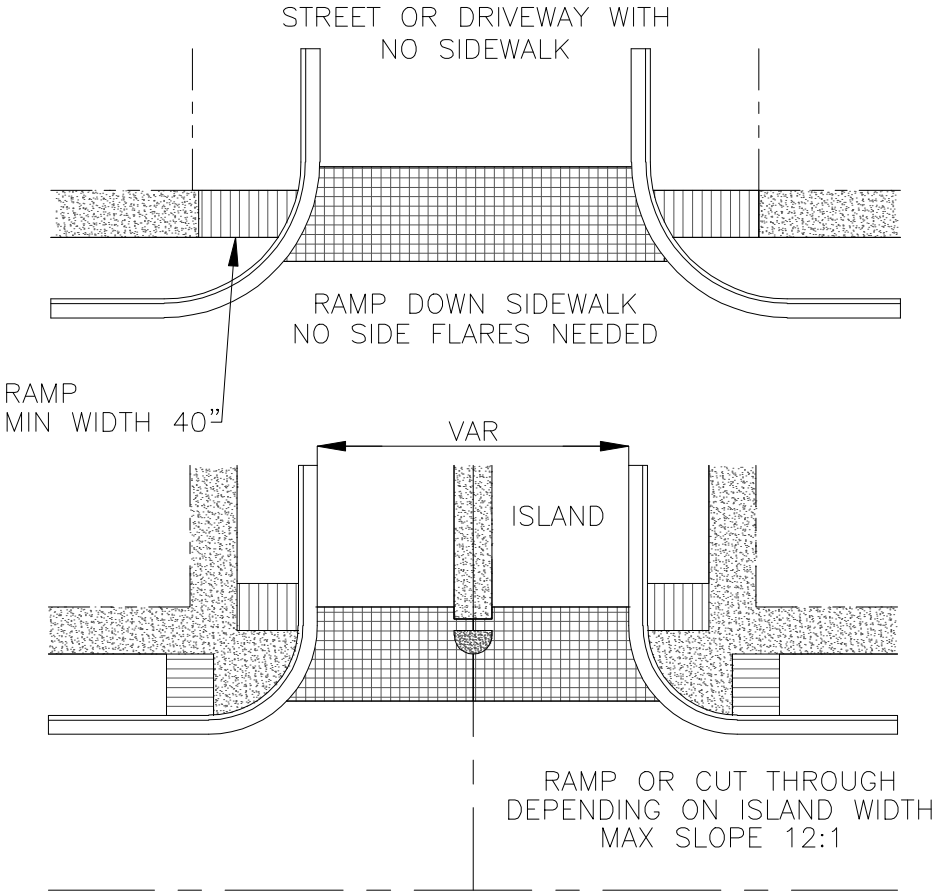

SPECIAL SITUATIONS FOR WHEELCHAIR RAMPS
& DEPRESSED CURBS
SD 8–12

	STANDARD DETAIL	CITY OF WILMINGTON ENGINEERING OFFICE 305 CHESTNUT STREET PO. BOX 1810 WILMINGTON N.C. 28402 (910) 341–7807
DATE: 2/29/2008	**SPECIAL SITUATIONS FOR WHEELCHAIR RAMPS AND DEPRESSED CURBS SHEET 2 OF 2**	
DRAWN BY J. RHYNE		
CHECKED BY AMS., P.E.		
SCALE NOT TO SCALE		**SD 8-12**

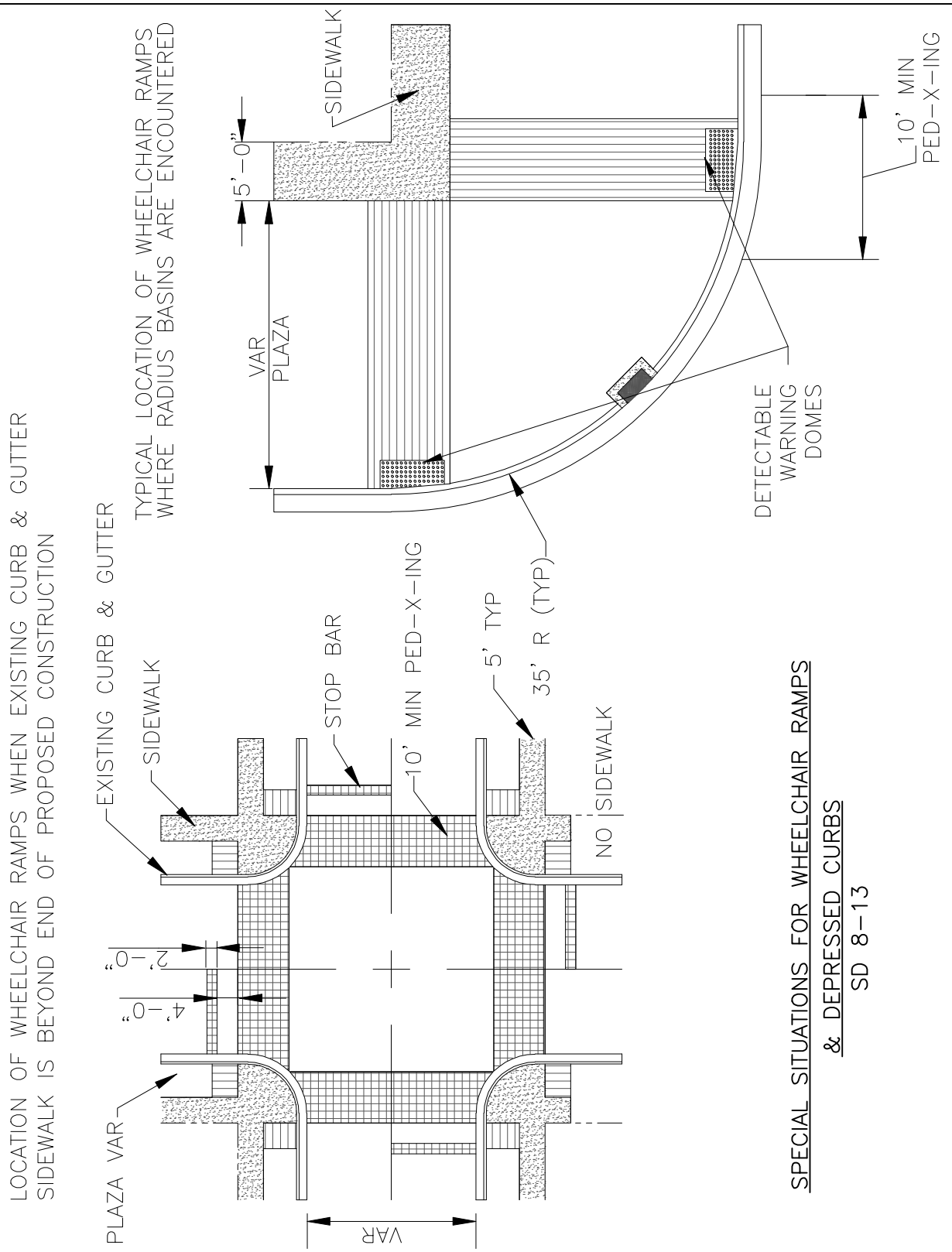

SPECIAL SITUATIONS FOR WHEELCHAIR RAMPS
& DEPRESSED CURBS
SD 8-13

	STANDARD DETAIL	CITY OF WILMINGTON ENGINEERING OFFICE 305 CHESTNUT STREET PO. BOX 1810 WILMINGTON N.C. 28402 (910) 341-7807
DATE: 2/29/2008	**SPECIAL SITUATIONS FOR WHEELCHAIR RAMPS AND DEPRESSED CURBS**	
DRAWN BY J. RHYNE		
CHECKED BY AMS, P.E.		
SCALE NOT TO SCALE		SD 8-13

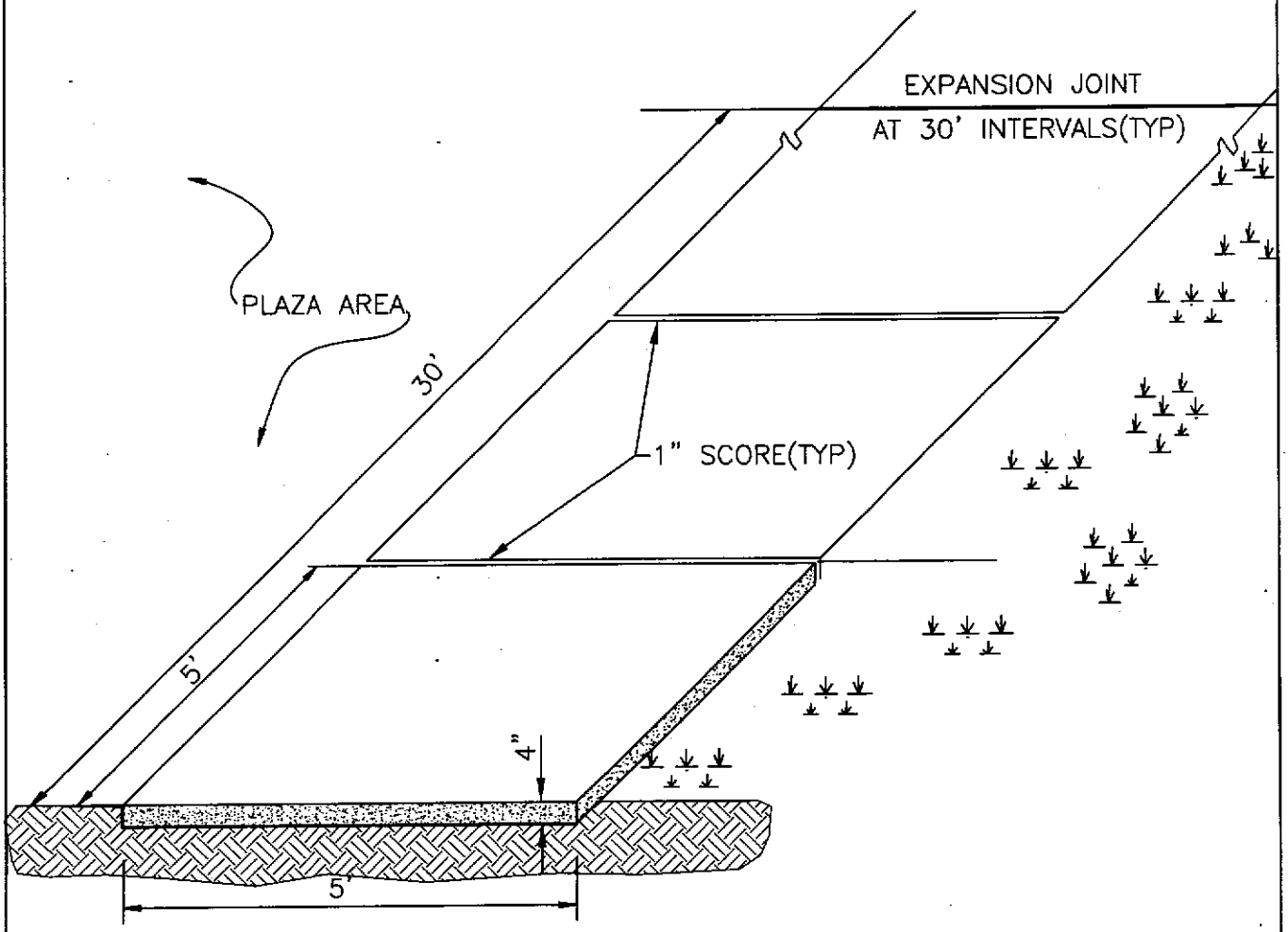

	STANDARD DETAIL	CITY OF WILMINGTON ENGINEERING OFFICE 305 CHESTNUT STREET PO. BOX 1810 WILMINGTON N.C. 28402 (910) 341-7807
DATE: 2001	SIDEWALK DETAIL	
DRAWN BY JSR/CMR		
CHECKED BY B.P., P.E.		
SCALE NOT TO SCALE		SD 8-15

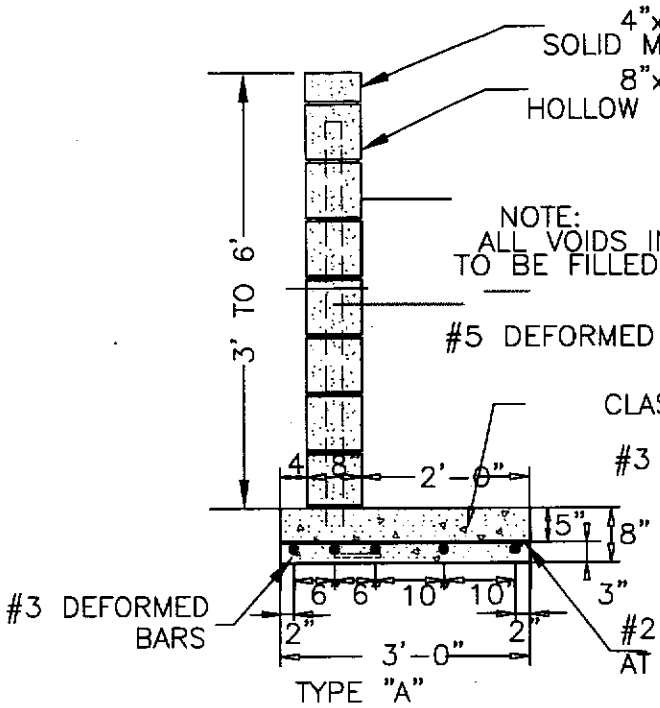

TYPE "A"
TYPICAL SECTION CONC MASONRY
RETAINING WALL FOR HEIGHT OVER 3'

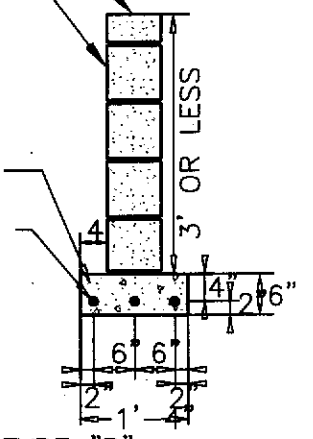

TYPE "B"
TYPICAL SECTION CONC MASONRY
RETAINING WALL FOR HEIGHT 3'

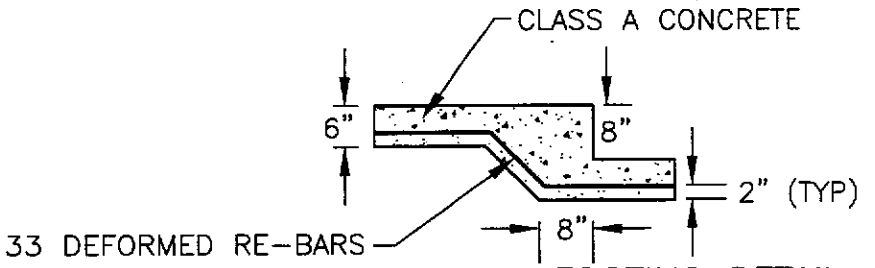

TYP LONGITUDINAL FOOTING DETAIL

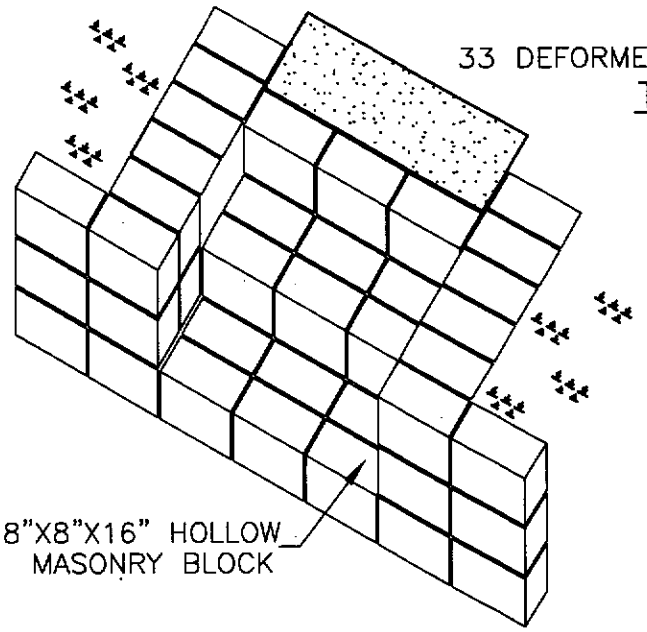

NOTE:
4' OPENING TYP W/6' CONCRETE
SLAB FOUNDATION UNDER STEPS

	STANDARD DETAIL	CITY OF WILMINGTON ENGINEERING OFFICE 305 CHESTNUT STREET PO. BOX 1810 WILMINGTON N.C. 28402 (910) 341-7807
DATE: 2001	MASONRY BLOCK RETAINING WALL, FOOTING & BLOCK STEPS	
DRAWN BY JSR/CMR		
CHECKED BY B.P., P.E.		
SCALE NOT TO SCALE		SD 8-14

FIG. 1
CLASS – C
SHAPED BOTTOM

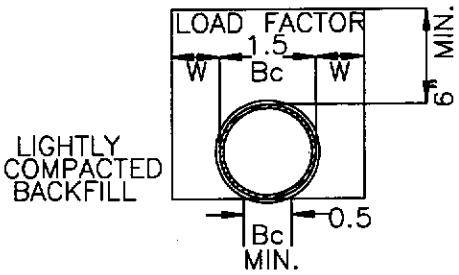

HAND SHAPED FROM
FIRM UNDISTURBED SOIL

FIG. 2
CLASS – C
SHAPED BOTTOM

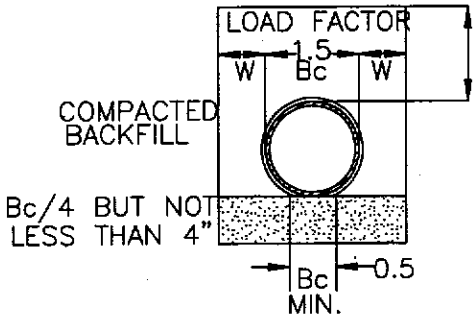

HAND SHAPED FROM
ANGULAR BEDDING MATERIAL

FIG. 3
CLASS – B

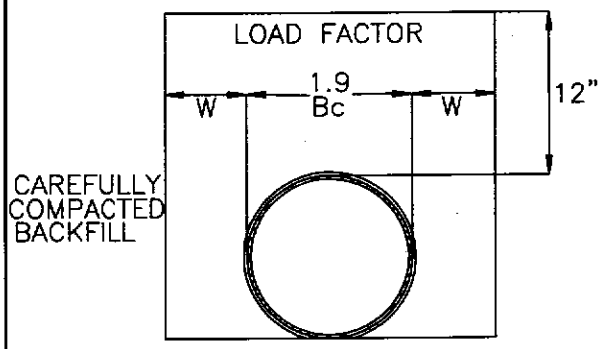

HAND SHAPED FROM
UNDISTURBED FIRM SOIL

FIG. 3
CLASS – B

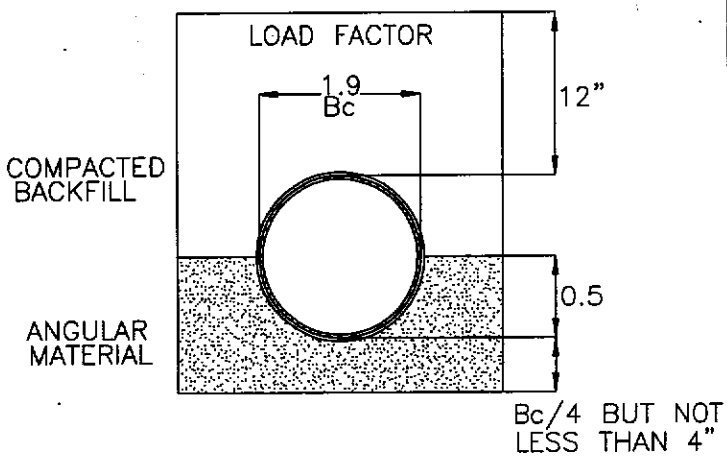

	STANDARD DETAIL	CITY OF WILMINGTON ENGINEERING OFFICE 305 CHESTNUT STREET PO. BOX 1810 WILMINGTON N.C. 28402 (910) 341-7807
DATE: 2001	GUIDELINES FOR BEDDING DETAILS, SANITARY SEWER CLASSES (B & C)	
DRAWN BY JSR/CMR		
CHECKED BY B.P., P.E.		
SCALE NOT TO SCALE		SD 3-07

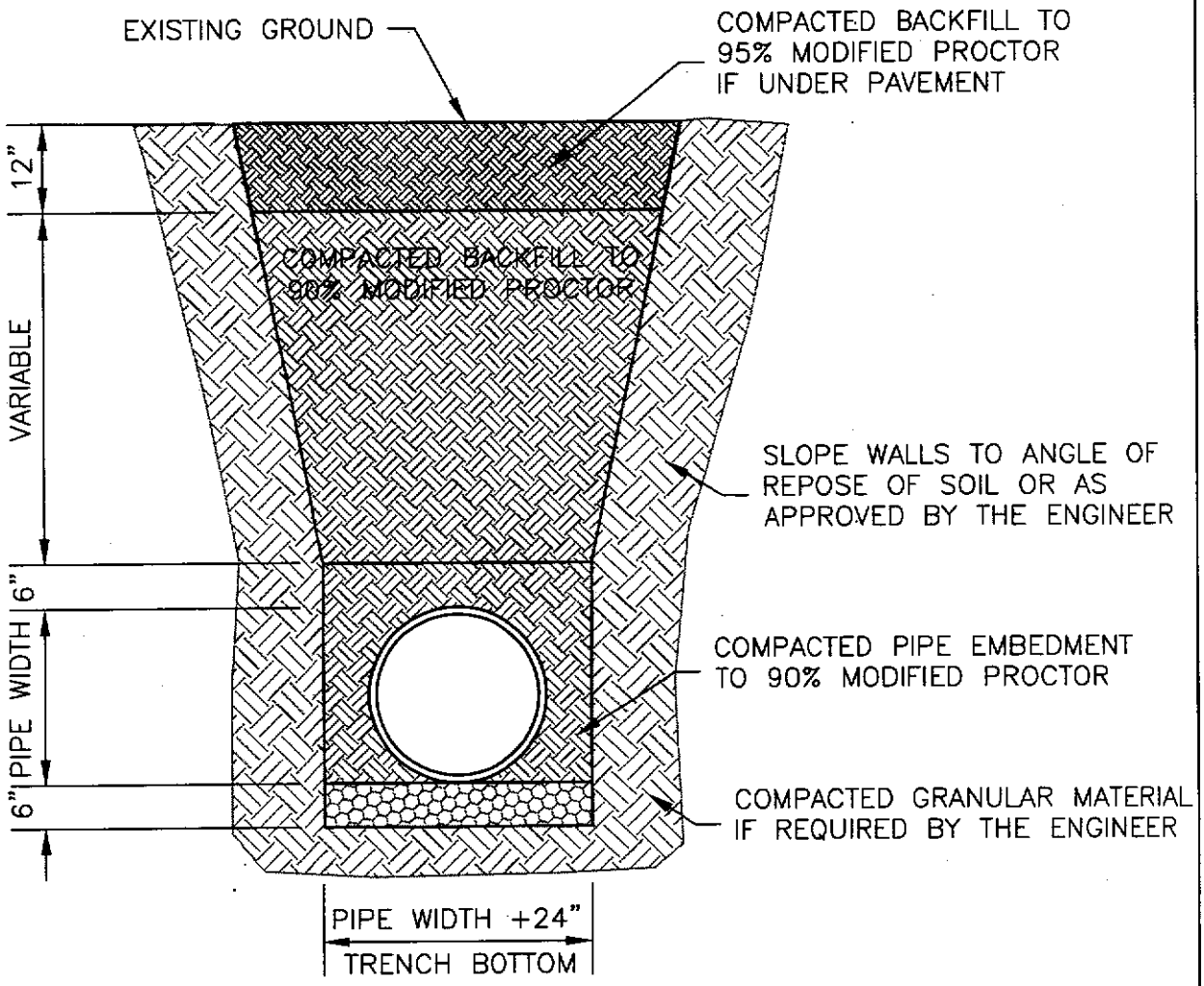

	STANDARD DETAIL	CITY OF WILMINGTON ENGINEERING OFFICE 305 CHESTNUT STREET PO. BOX 1810 WILMINGTON N.C. 28402 (910) 341-7807
DATE: 2001	STANDARD PIPE TRENCH DETAIL	
DRAWN BY JSR/CMR		
CHECKED BY B.P., P.E.		
SCALE NOT TO SCALE		SD 1-07

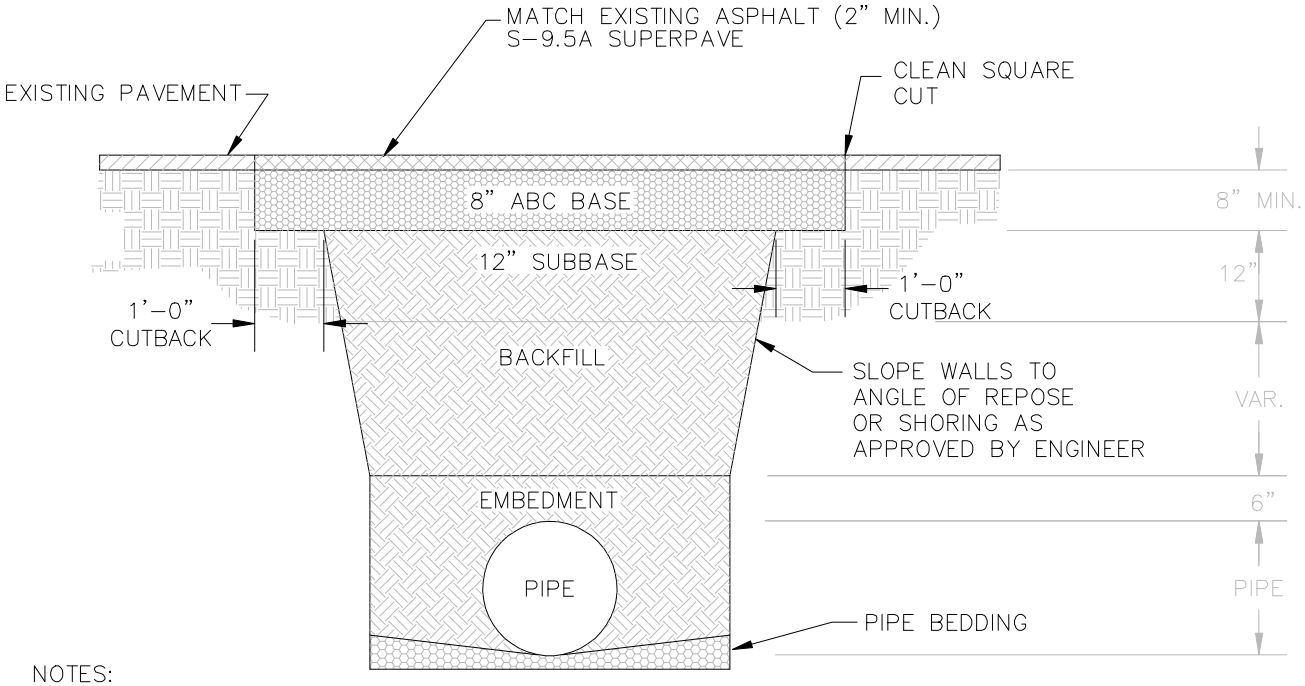

NOTES:

1. BACKFILL SHALL BE SUITABLE MATERIAL THAT IS FREE FROM HEAVY CLAY, GUMBOS, DEBRIS, ORGANICS AND LITTLE OR NO EXCESSIVE MOISTURE.
2. SELECT BACKFILL MAY BE SUBSTITUTED OR REQUIRED BY CITY ENGINEER FOR TIGHT COMPACTION, (I.E. #57, ABC, CRUSHED LIMESTONE, CLEAN SAND, FLOWABLE FILL, ETC).
3. 8-INCH OF ABC BASE MATERIAL SHALL BE USED ON CITY STREETS.
4. BACKFILL AND BASE MATERIALS SHALL BE COMPACTED 12" MINIMUM LIFTS
5. SOIL SHALL BE COMPACTED BY A MECHANIZED TAMPER (I.E JUMPING JACK), HOWEVER, VIBRATORY ROLLERS > 18" WIDTH MAY BE USED FOR LARGER EXCAVATIONS. THE PLATE TAMP METHOD SHALL NOT BE USED.
6. ALL CASTINGS SHALL BE SET FLUSH TO GRADE AND SUPPORTED IF APPLICABLE.
7. ABC BASE AND SUBBASE COMPACTED TO 95% AND BACKFILL AND EMBEDMENT COMPACTED TO 90% AS DETERMINED BY THE MODIFIED PROCTOR AASHTO METHOD T-99.
8. 1-FOOT CUTBACKS OF ASPHALT SHALL BE PREPARED ON UNDISTURBED SOIL AFTER BACKFILL AND COMPACTION OF TRENCH.

	STANDARD DETAIL	CITY OF WILMINGTON ENGINEERING OFFICE 305 CHESTNUT STREET PO. BOX 1810 WILMINGTON N.C. 28402 (910) 341-7807
DATE: NOVEMBER, 2008	PAVEMENT REPAIRS	
DRAWN BY JSR		
CHECKED BY B.R., P.E.		
SCALE NOT TO SCALE		SD 1-05

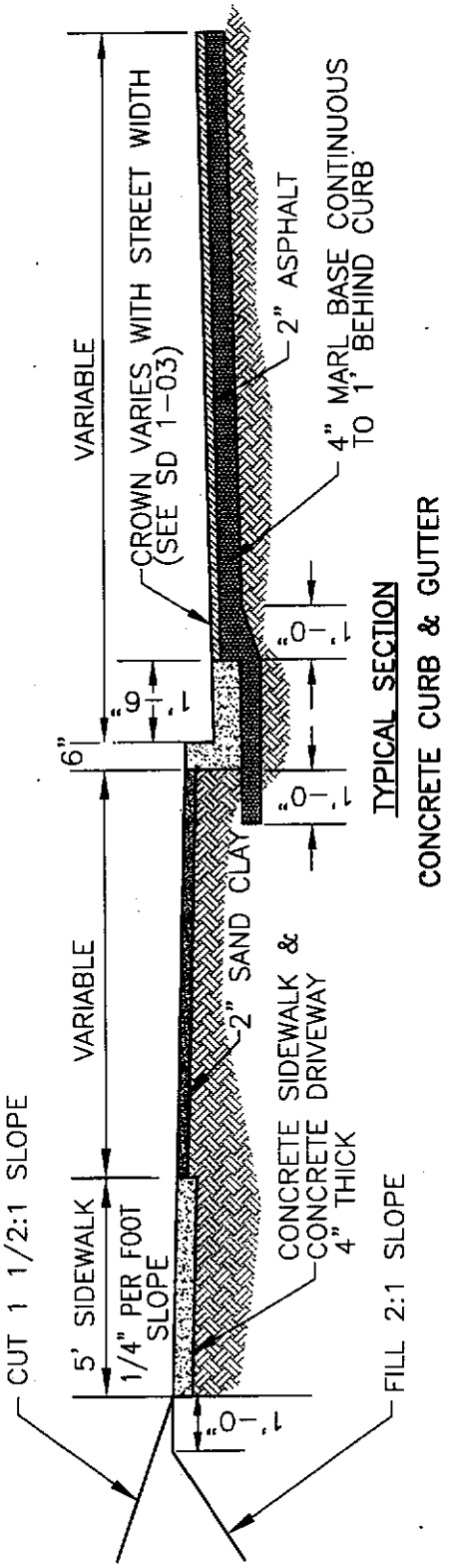

TYPICAL SECTION

CONCRETE CURB & GUTTER

NOTES:

*COMBINED CONCRETE CURB & GUTTER, CONCRETE SIDEWALK AND DRIVEWAYS TO BE 3000 POUNDS STRENGTH CONCRETE.
*SCORE JOINTS TO BE PLACED EVERY 5' ACROSS SIDEWALK, IN SIDEWALK AREA OF DRIVEWAYS.
*EXPANSION JOINTS TO BE PLACED ACROSS SIDEWALK EVERY 30'.
*EXPANSION JOINTS TO BE PLACED BETWEEN: SIDEWALK AND CURB, SIDEWALK AND DRIVEWAY, AND DRIVEWAY AND CURB RETURN WHERE THEY ADJOIN.

	STANDARD DETAIL	CITY OF WILMINGTON ENGINEERING OFFICE 305 CHESTNUT STREET PO. BOX 1810 WILMINGTON N.C. 28402 (910) 341-7807
DATE: 2001	STANDARD STREET SECTION	
DRAWN BY JSR/CMR		
CHECKED BY B.P., P.E.		
SCALE NOT TO SCALE		SD 1-02

III

WATER

SEE CAPE FEAR PUBLIC UTILITIES AUTHORITY

www.cfpua.org

IV

SEWER

SEE CAPE FEAR PUBLIC UTILITIES AUTHORITY

www.cfpua.org

V

STORM WATER MANAGEMENT

TABLE OF CONTENTS

SECTION	PAGE
A. GENERAL	5-1
B. STORM WATER MANAGEMENT POLICY	5-1
C. PLAN SUBMITTALS	5-1
D. MINIMUM DESIGN STANDARDS	5-2
1. PIPED DRAINAGE SYSTEMS	5-2
2. INLET DESIGN	5-4
3. OPEN CHANNELS	5-4
4. DETENTION FACILITIES	5-6
E. DETERMINATION OF RUNOFF	5-8
F. PIPE SYSTEM DESIGN	5-17
G. OPEN CHANNEL DESIGN	5-41
H. STORM WATER DETENTION PONDS	5-49
I. INFILTRATION SYSTEM	5-58
J. CONSTRUCTION STANDARDS	5-59
K. MAINTENANCE	5-63
STANDARD DETAILS	5-70
CHARTS AND TABLES	5-71

A. GENERAL

This section is intended to set forth performance, design and construction standards for storm water management systems, the plan submittal requirements of the City of Wilmington, and design procedures for use by the designer. The methods and procedures presented are intended to simplify the design and review process for residential and commercial storm water management systems in the City of Wilmington. It is not required that the methods presented be used by the designer, however, these methods, charts and procedures will be used by the City to determine adequacy of storm water management systems.

B. STORM WATER MANAGEMENT POLICY

It is the policy of the City of Wilmington that all developed land within the City have adequate storm water facilities and controls to ensure the protection and safety of life and property. The City may accept a storm water management system for maintenance if the system provides drainage for streets that have been accepted for maintenance by the City Council and has been designed and constructed in accordance with the provisions of Chapter 20 of the City Code and this Chapter.

C. PLAN SUBMITTALS

One set of site plans shall be submitted to the City Engineering Department for review and approval, and shall include:

All applicable items scheduled in the "Checklist for the City of Wilmington Storm Water Standards". A copy of this checklist is provided at the end of the technical standards.

1. Certification Requirements

The following certifications shall appear on all plans:

a. Designers Certification

"I hereby certify that this plan has been prepared in accordance with the latest Wilmington Standards and Specifications for Storm Water Management and Chapter 20 of the Code of Ordinances of the City of Wilmington."

Signature:
Printed Name and Title:_____
Date:_____ Registration Number: _____

b. Owner's/Developer's Certification

"I/We hereby certify that any clearing, grading, construction or development, or all of these, will be done pursuant to this plan and that the applicable Stormwater Management conditions and requirements of the City of Wilmington, the State of North Carolina and the Federal Government and its agencies are hereby made part of this plan."

Signature:_____
Printed Name and Title:_____
Date:_____

D. MINIMUM DESIGN STANDARDS

1. Piped Drainage Systems

a. Piped Collection Systems

Piped collection systems shall be designed for the 10-year frequency storm event. The system low points shall be analyzed for the 50-year frequency storm event to check the system for flooding.

b. Areas Requiring Piping

Open streams, channels and ditches contained in or partly contained within the property being developed shall be piped by the developer unless the pipe designed exceeds 48 inches in diameter. The City Engineer may approve some of these ditches to remain open in extenuating circumstances and/or when they are designed to improve water quality. The designer shall consider all off-site areas which will drain through the project site for ultimate development in accordance with current zoning designations. Channels which remain open shall be designed and constructed in accordance with Section G- Open Channels.

1. Where there are existing open channels that are vegetated, stable and non-erosive, and where the existing channel can carry the estimated design flows (both from the development site and the offsite drainage area that flows through the channel), including streams where less than a 48 inches in pipe diameter is needed to carry the design flow, the channels may be left in their natural state. Sufficient easement shall be provided to access and maintain the channel. Where minor modifications to these channels are require to accommodate the total design flow, but most of the natural vegetation and natural banks can be preserved, the channel modifications will be allowed and the channel will not be required to be piped. Additionally, the channel shall be analyzed for the 100-year storm to ensure that there is sufficient area to carry the 100-year storm flow.

Where piped systems discharge into open channels, a vegetative channel or other appropriate BMP shall be required. This channel shall be designed to handle the 10-year storm and analyzed for the 100-year storm. The length of the vegetative channel shall be a minimum of 100 feet.

NOTE: The intent/purpose of analyzing the 100-year storm is to verify that no structures will be flooded by the 100-year event and that any flooding that occurs within streets is at an acceptable level as determined by the staff of the governing authority. It is not the intent that the channel or pipe contain the 100-year event, but that building are not flooded nor streets made impassable by the flooding.

c. Minimum Size Pipe

The minimum size storm drain pipe shall be 12 inches unless the pipe will be part of the NCDOT system, in which case NCDOT minimum pipe size requirements shall apply.

d. Subdrains

Where considered necessary by the City Engineer subdrains shall be installed. Reference SD-2.04 of this chapter. The ditch shall be at least three (3) feet, six (6) inches in depth and the stone shall completely encircle the perforated pipe for a minimum distance of six (6) inches from the pipe in all directions. The stone shall be #467M washed stone. The pipe shall be six (6) inch perforated pipe selected from those listed in Chapter II, Section H, paragraph 16. A non-woven filter fabric shall be installed as per SD-2.04 and in strict accordance with the manufacturer's recommendation. The City Engineer shall approve the non-woven filter fabric.

e. Minimum and Maximum Velocity

The minimum allowable velocity for a pipe segment for the design storm shall be 2.5 feet per second unless authorized by the City Engineer. The maximum velocity shall vary per specific situation, but shall be designed such that scour or other deteriorative conditions will not exist.

f. Minimum Cover

The minimum cover over a storm drainage pipe shall be 2.0 feet. Cover shall be measured from the top of the pipe to the bottom of the base course in roadways. For alternative materials a greater minimum cover may be required, as determined by the manufacturer. In the event lesser cover requirements are determined to be necessary, specific approval of the City Engineer will be required.

g. Easements

Piped systems to be dedicated public shall be located within the public rights-of-way as shown in SD-15.05 of this chapter, where possible. Where this is not possible, a dedicated drainage easement will be required with a width determined by the following equation, rounded to the nearest five (5) foot increment except that in no case shall the easement be less than twenty (20) feet:

$$\text{Width} = (2 \times \text{depth}) + \text{Dia.} + 12'$$

The easement shall be continuous along the pipe to a point of junction with an existing public right-of-way or easement.

h. Manhole Spacing

Manholes shall be required at changes in grade and/or alignment and at pipe junctions. The maximum spacing between two manholes in any instance shall be 400 feet. Spacing in excess of 400 feet on pipelines greater than 54 inches in diameter may be approved on a case-by-case basis by the City Engineer.

i. Headwalls

Headwalls or flared end sections shall be required at the inlet and outlet of all pipe systems.

j. Energy Dissipaters

Energy dissipaters shall be designed and constructed at the outlets of all pipe systems to prevent erosion in the receiving water course. These shall be designed for the 10-year storm.

k. Existing Systems

Where feasible, the piped drainage system shall connect to an existing piped drainage system.

2. Inlet Design

a. Design Storm Event

Curb inlets and catch basins shall be designed for the 10-year storm. Inlets in low points shall be analyzed for the 50-year storm to identify potential hazards.

b. Inlet Locations

1. Curb inlets shall be located such that the gutter flow spread does not exceed eight (8) feet or 1/3 of the street width, whichever is less, during a 10-year storm event with a maximum spacing of 400 feet.
2. Curb inlets shall be located at all low points to prevent ponding water.
3. Curb inlets shall be located an the upstream sides of intersecting streets to prevent flow across the intersecting street.
4. No curb inlets shall be constructed in the radius of curbing at intersections. The minimum distance from the end of radius (PC/PT) to the center of a catch basin is five (5) feet.

3. Open Channels

a. Design Storm Event

Open channels, where allowed, shall be designed for the peak run-off produced by a 10-year frequency storm. Analyses shall also be provided for the 50-year frequency storm. The designer shall include in his calculations the run-off from the off-site areas assuming ultimate development in accordance with the current zoning regulations, as well as the run-off from the property being developed. Tailwater conditions at the channel outlets

shall be evaluated in the design of the open channels. Hydraulic grade line calculations shall be included in the submittals. Hydrographs shall be routed through channel reaches using the convex or other accepted method when channel reaches exceed 500-feet. Open channels, streams and ditches, requiring pipe less than 48 inches in diameter shall be piped unless authorized by the City Engineer.

b. Side Slopes

It is the intent that all side slopes for vegetated channels be designed such that the soils and slopes of the banks will support stable vegetation growth unless armored or designed in another approved manner. The side slopes for vegetated channels shall be 3 (horizontal) to 1 (vertical) or flatter. The side slopes should be 3 to 1 where mowing is necessary. Where the side slopes are protected with riprap, fabric form, or other approved armoring, side slopes of 2 to 1 will be permitted. Steeper slopes may be approved by the City Engineer on a case-by-case basis.

c. Bottom Width

The minimum bottom width for an open channel shall be three (3) feet.

d. Maximum Velocities

The maximum velocities for a channel are dependent upon the type of lining used. Refer to Section G for maximum allowable velocities for various linings.

e. Alternative Solutions

The linings referred to in Section G are not intended to limit the designer in his choice of linings. Innovative techniques used in design of channels are encouraged. Proposed innovative linings shall be approved by City engineering staff prior to use. Complete supporting documentation shall be submitted for approval of alternative lining methods in these situations.

f. Rights-of-way and Easements

In order to maintain municipally-owned unpiped storm water management systems in public or private developments, rights-of-way and easements will be required by the City for all open ditches, swales, or other systems dedicated to the City located outside of public rights-of-way. Such rights-of-way or easements shall be provided in accordance with the following sketch, and shall be continuous to a point of junction with a public right-of-way where possible:

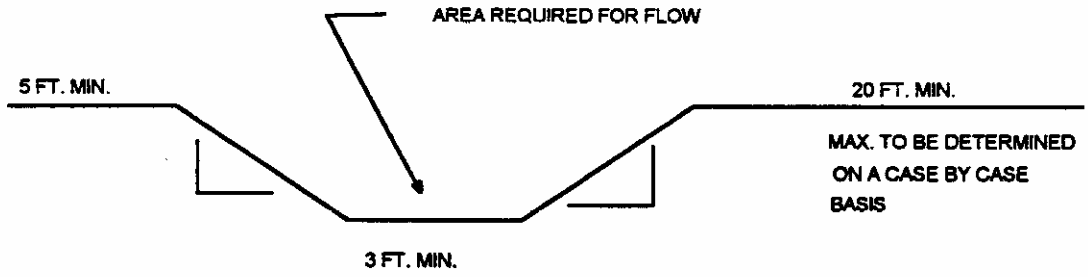

NOTE: See paragraph b. above for allowable side slopes.

Widths in excess of the X-section shown may be necessary and required by the City Engineer on a case-by-case basis.

NOTE: The designer should refer to the N.C. Department of E.H.N.R. "Erosion and Sediment Control Planning and Design Manual" for supplemental information.

g. <u>Swales</u>

Swales shall have a minimum bottom width of 3 feet. Swales shall be considered as a secondary drainage system while open channels shall be considered primary drainage systems. Preferred side slopes are 5:1 unless otherwise approved by the City/County Engineer. For slopes steeper that 5:1 stabilization may be required using sod, geotextile fabric, erosion control fabric, or other approved erosion control material.

4. <u>Detention and Wet Retention Facilities</u>

Storm water detention facilities shall be designed to meet two goals. The first goal is to control the post development peak discharge from the site for the 2-yr, and 10-yr storms to not exceed the pre-development peak runoff discharge rate for the same storm. The second goal is to detain a sufficient volume of runoff from the site in order to release it over a two (2) to five (5) day period for the purpose of minimizing impacts on water quality and downstream flooding conditions. In addition to the COD requirements, a minimum of the first 1-inch of rainfall shall be detained for at least two (2) days and no more than five (5) days. The City can require a larger amount if site conditions dictate. An emergency spillway shall be provided such that it can handle the 50-year storm assuming the principle spillway is obstructed or not operating properly. The elevation of the dam shall be a minimum of 0.5 feet above the peak surface elevation for the 50-year storm.

However, the City suggests that the developer or owner incorporate storm water controls into the overall site as an amenity and/or visual enhancement. The following are minimum requirements for detention/retention facilities:

a. <u>Minimum Slopes</u>

It is the intent that all vegetated slopes be designed such that the soils and slopes of the banks will support stable vegetation growth unless armored or designed in another approved manner. Side slopes where vegetation is used for stabilization shall be 3 (horizontal) to 1 (vertical) or flatter. The side slopes should be a minimum of 3 to 1 where mowing will be necessary. Where the side slopes are protected with riprap, fabric form, or other approved armoring, side slopes of 2 to 1 will be permitted. Steeper slopes may be approved by the City Engineer on a case-by-case basis.

b. Vegetation

Vegetation for stabilization of side slopes shall be a hearty round cover such as the following listed in order of best overall suitability:

1) Tall Fescue
2) Bermuda Grass
3) Pensacola Bahiagrass
4) Reed Canary Grass

All of these are well suited for flooding tolerance and waterways and channels. The bahiagrass is excellent for sandy sites. The others spread by rootstocks making a well anchored and stable ground covering.

The designer shall consult with the appropriate staff regarding landscaping standards such as selection, spacing, location, and planting requirements of all grasses and plants which are to be incorporated in the system. Approval of a landscaping plan by the appropriate staff will be required prior to issuance of a construction permit. The approved landscaping plan must include the planting for the vegetative shelf for wet ponds.

c. Outlet Structures

Outlet structures shall be constructed out of concrete or masonry. The minimum barrel size shall be twelve (12) inches. A hinged trash rack with appropriate sized openings shall be provided over all outlet structure openings to avoid the pipe clogging. The outlet structure is to be accessible for maintenance.

d. Drain

The design of the pond should incorporate a method of draining all water by use of a valve assembly. Where this is not possible, a well defined low point shall be constructed to allow for pumping out the facility.

e. Overflow

An emergency outlet or overflow designed according to the following parameters:

1. Minimum of six (6) inches higher than the top of the outlet structure but in no case lower than the water surface elevation that restricts the discharge to the 25-year pre-development flow rate.
2. Sized to pass the 100-year storm event;
3. It shall have appropriately designed stabilization material from the top of the spillway down to natural grade.

f. Other Utilities

No other utilities shall be constructed within five (5) feet of the storm water detention/retention pond unless specifically approved by the City Engineer.

g. Landscaping

Open basins shall be provided with a minimum 5-foot landscaped zone around the periphery of the ponds which have a surface area up to 0.5 acres as measured at the top bank. A minimum 10-foot landscaped zone as measured outward from the top of the bank shall be provided for ponds larger than 0.5 acres. A typical storm water facility landscaping plan is shown on SD-16 located in Chapter VI, Landscaping.

h. Access

A stable access and maintenance shoulder with a minimum width of ten (10) feet measured from the top of bank shall be provided sufficient to allow the periodic removal of sediment from the system. This access shall be coordinated with the landscaping zone around the basin. The landscaping zone shall not be incorporated in the access/maintenance way.

i. Fencing

Fencing for private facilities shall be at the option of the developer.

j. Flooding of Parking Areas

The flooding of parking areas for providing storm water storage volume is discouraged. When this method is used, no more than 25% of the required parking may be flooded by three (3) inches or more for the ten-year storm. The storm water system shall be designed to completely drain from the parking lot within two hours after the storm.
Dams constructed as pan of storm water facilities which are regulated by the N.C. Department of Environment, Health, and Natural Resources, shall obtain a dam safety permit, prior to the City Engineer's approval.

E. DETERMINATION OF RUNOFF

One of the most frequently used methods for determining the peak rate of runoff for small watersheds is the Rational Method. The Rational Method is presented below as a guide to the designer. Other methods such as the SCS Curve Number Method should be utilized where the Rational Method is less appropriate. The Rational formula is expressed as:

$$Q=CIA$$

where **Q** is the maximum rate of runoff from the drainage area expressed in cubic feet per second (cfs); C is a runoff coefficient, which is unitless; I is the rainfall intensity, expressed in inches per hour; and A is the drainage area expressed in acres. These components to the Rational formula are explained in detail in the following sections.

The designer should be cautious in the use of the Rational Method and only with the understanding of the inherent limitations. Some of the more critical limitations are described below:

- This method uses one coefficient to describe the surface conditions in a watershed that may have greatly varying surfaces and soils. The use of a composite runoff coefficient is normally used to represent the variations in surface conditions.

- The return period for the resulting runoff is assumed to be directly related to the rainfall event regardless of the watershed conditions. An attempt to compensate for the antecedent moisture conditions is usually made in the determination of the runoff coefficient.

- The Rational Method assumes the rain event to have a constant intensity throughout the storm.

1. <u>Runoff Coefficient</u>

There are several factors to be considered in the determination of the runoff coefficient "C". The drainage area slope, soil type, land use, imperviousness, and antecedent moisture condition are the major factors to be considered. The designer shall use a composite or weighted "C" to reflect the variations encountered within a drainage area. Chart E-l gives typical values of "C" for the Wilmington area. This table should be used as a guide to develop a composite "C" for the drainage area m questions.

2. <u>Drainage Area</u>

The area that contributes runoff to the point of interest for storm drainage design can be determined by utilizing a suitable topographic map. The ridge lines of the drainage basin are first delineated on the map. The area defined can then be measured by a planimeter or other suitable method.

CHART E-1

Runoff Coefficient for Various Land Uses

Typical Values **

		Sandy Soils		Clay Soils	
Slope	**Land-Use**	**Min.**	**Max.**	**Min.**	**Max.**
Flat	Woodlands	0.10	0.15	0.15	0.20
(0-2%)	*pastures, grass,& Farmland	0.15	0.20	0.20	0.25
	Rooftops and pavement	0.95	0.95	0.95	0.95
	Single family Residential:				
	1/2 acre lots and larger	0.30	0.35	0.35	0.45
	Smaller lots	0.35	0.45	0.40	0.50
	Multi-family Residential:				
	Duplexes	0.35	0.45	0.40	0.50
	Apartments, townhouses, and condominiums	0.45	0.60	0.50	0.70
	Commercial and Industrial	0.50	0.95	0.50	0.95
Rolling	Woodlands	0.15	0.20	0.20	0.25
(2-7%)	*Pastures grass, & Farmland	0.20	0.25	0.25	0.30
	Rooftops and pavement	0.95	0.95	0.95	0.95
	Single family Residential:				
	1/2 acre lots and larger	0.35	0.50	0.40	0.55
	Smaller lots	0.40	0.55	0.45	0.60
	Multi-family Residential:				
	Duplexes	0.40	0.55	0.45	0.60
	Apartments, townhouses, and condominiums	0.50	0.70	0.60	0.80
	Commercial and Industrial	0.50	0.95	0.60	0.95

* Coefficients assume good ground cover and conservation treatment.

** Weighted coefficient based on percentage of impervious surfaces and green areas must be selected for each site.

Source: Storm water Design Manual, Town of Mount Pleasant, S.C.

3. Rainfall Intensity

The rainfall intensity "I" is a function of storm duration and return frequency. The storm duration used for design is normally equal to the time of concentration, or the time for water to travel from the most remote point in the watershed to the point of design. The first step to determine the applicable rainfall intensity is to estimate the time of concentration, Tc. Two methods for use in determining the Tc are described below.

a. Kirpich Method - The Kirpich method should be limited in use for watersheds 20 acres or less. The time of concentration can be determined using the nomograph labeled Chart E-2. To use the nomograph, the length of travel and the difference in elevation from the most remote point in the watershed to the point in question shall be determined. A straight line is drawn to connect the length and elevation difference determined above and extended to the intersection with the time of concentration line and Tc is read in minutes. The following equation can also be used:

$$T_c = T_t = \frac{\left(\frac{L}{H}^{3}\right)^{0.385}}{128}$$

where:

L is hydraulic length from most remote point in the watershed measured in feet, **H** is the height of the most remote point above the point of interest in feet.

b. TR-55 Method - This method should be used for watersheds larger than 20 acres up to 1300 acres. The TR-55 approach to determining the time of concentration is a method of estimating the velocity of flow through the different parts of the watershed including sheet flow, shallow concentrated flow, and flow in open channels or conduits. Using the velocity and length of travel through the different segments, the travel time is determined and summed to obtain the time of concentration, Tc. The following are steps taken to estimate Ic for the three flow types:

1) Sheet Flow - Sheet flow normally occurs at the head water of streams in the drainage basin. The flow is usually over plane surfaces for a maximum length of approximately 300 feet. Manning's "n" values are used to compensate for the various types of surfaces. Chart E-3 gives "n" values for normally encountered surfaces. The time of travel for sheet flow is computed using the following formula:

CHART E-2

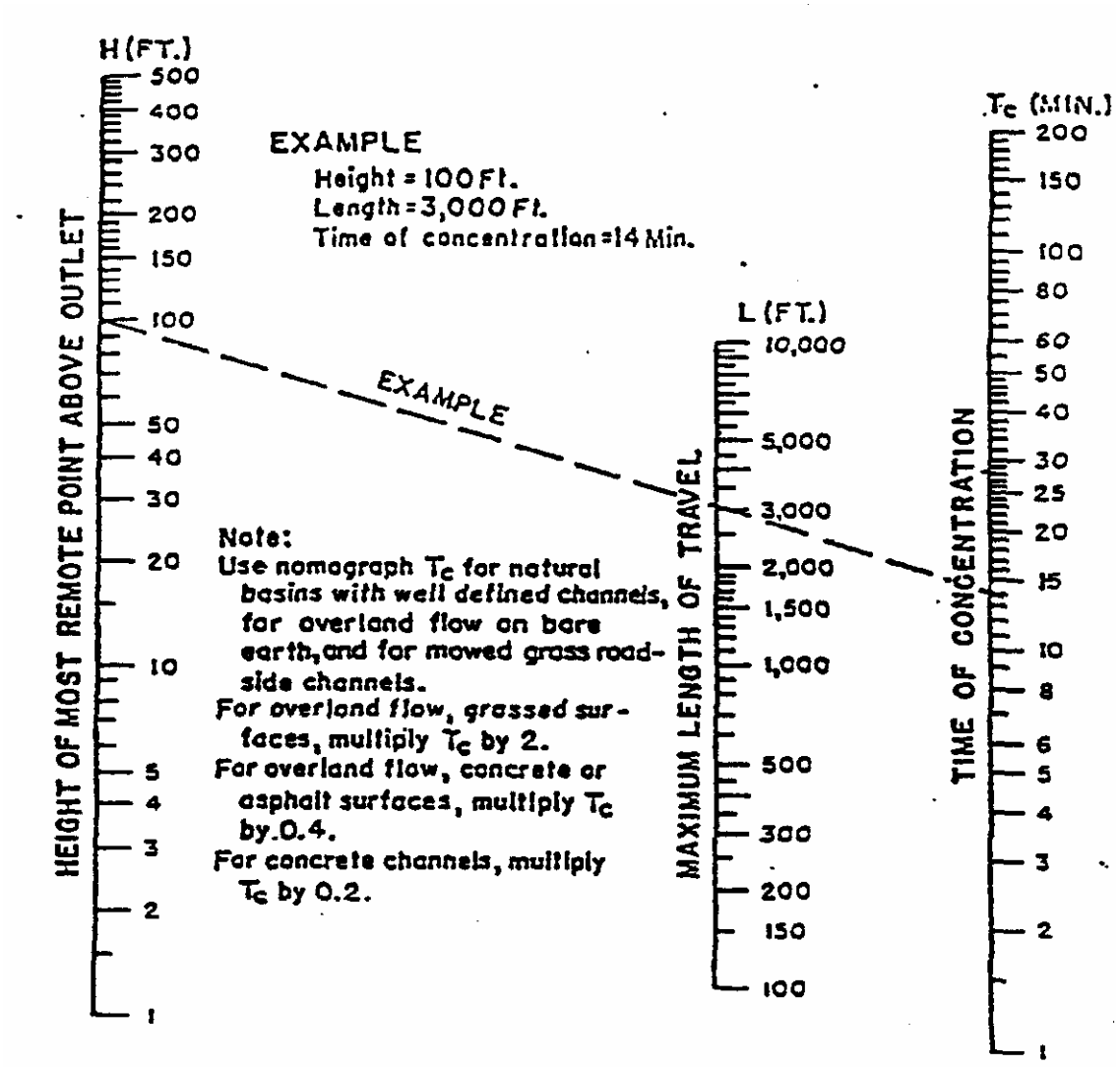

Based on study by P.Z. Kirpich,
Civil Engineering, Vol 10, No. 6, June 1940, p.362

$$Tt = \frac{.007\,(n\,L)^{0.8}}{P_2^{0.5}\,S^{0.4}}$$

where

Tt is travel time in hours
n is Manning's roughness coefficient

L is length of flow in feet
P_2 is 2-year 24-hour rainfall in inches
s is the land slope in ft/ft

CHART E-3

Roughness coefficients (Manning's n) for sheet flow

Surface Description	**n**
Smooth surfaces (concrete, asphalt, gravel, or bare soil)	**0.011**
Fallow (no residue)	**0.05**
Cultivated soils:	
Residue cover <200/o	**0.06**
Residue cover >20%	**0.17**
Grass:	
Short grass prairie	**0.15**
Dense grasses 0.24	
Bermuda grass	**0.41**
Range (natural)	**0.13**
Woods:	
Light underbrush	**0.40**
Dense underbrush	**0.80**

*Source: (Urban Hydrology for Small Watersheds, USDA-SCS 210-VI-Tr-55, Second Ed., June 1986)

2) <u>Shallow Concentrated Flow</u> - After 300 feet, sheet flow usually becomes shallow concentrated flow. The average velocity for this type of flow can be found by using Chart E-4 or by using the following formulas:

Unpaved $V = 16.1345(s)^{.05}$
Paved $V = 20.3282(s)^{.05}$

where s = slope

Once the average velocity is determined, the travel time can be computed as:

$$Tt = \frac{L}{3600V}$$

3) <u>Open Channel Flow</u> - For open channel flow, the travel time is computed using an estimated velocity of flow in the channel section. The velocity is estimated using Manning's equation expressed as follows:

$$V = \frac{1.49}{n} r^{2/3} s^{1/2}$$

where

V is velocity in feet per second (fps)

r is the hydraulic radius which is equal to the channel area divided by the wetted perimeter or the perimeter length of sides and bottom below the line of flow.

s is the slope of the hydraulic grade line or channel slope in ft/ft and n is the Manning's roughness coefficient

Once the average velocity is determined from the above equation, the travel time can be computed as in 2 above.

The time of concentration, Tc, is a summation of the three travel times computed in the preceding steps.

The rainfall intensity for design can be obtained from the Intensity-Duration Frequency Table or the equations provided on Page 5-17. The return period for design in the City of Wilmington for storm water management systems is the 10-year return frequency event.

CHART E-4

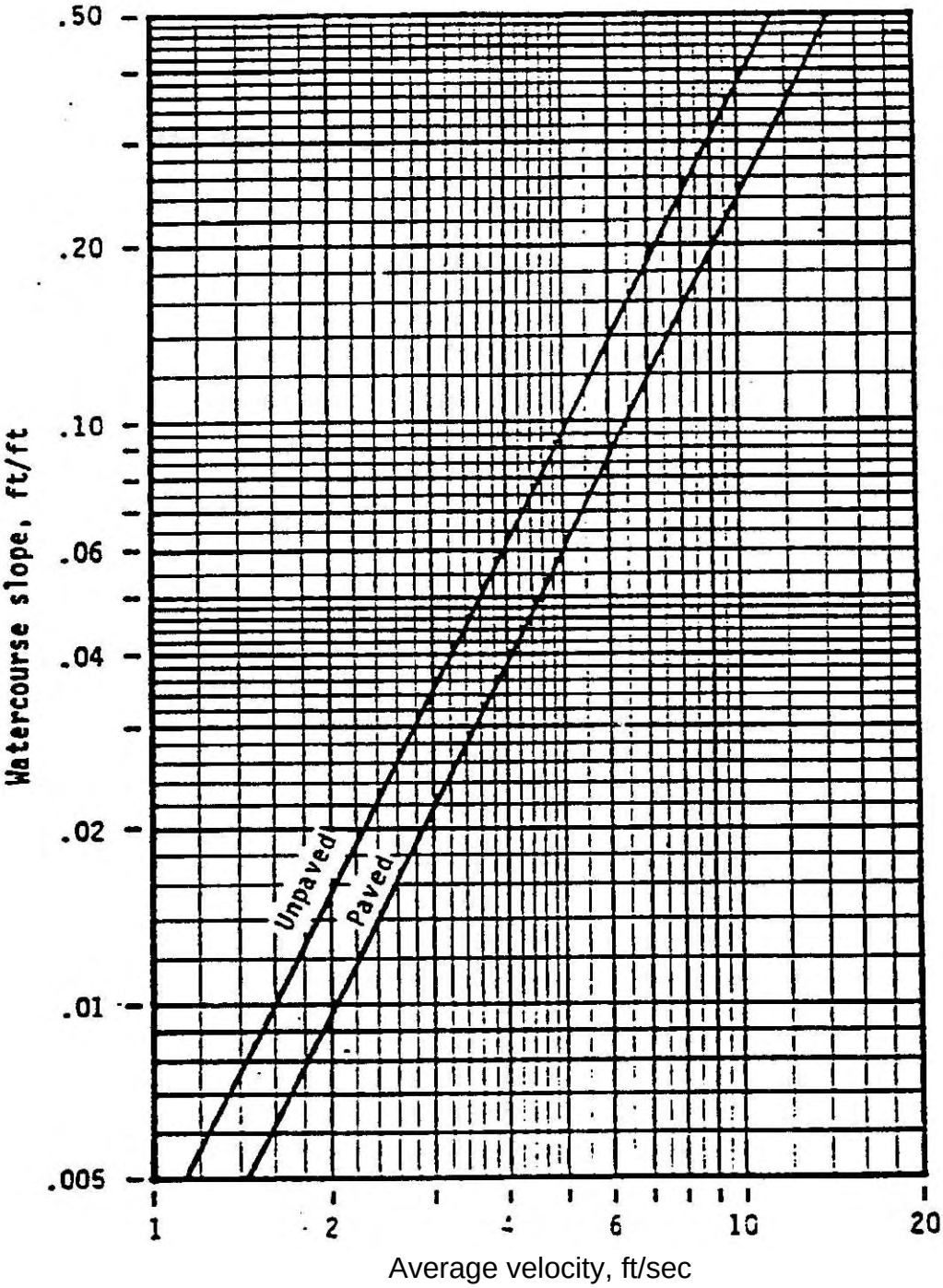

(210-VI-TR-55), Second Ed., June 1986

CHART E-5

Depth Duration Frequency Table

Location: Wilmington, NC

	Return Period					
Duration	2-yr [in]	5-yr [in]	10-yr [in]	25-yr [in]	50-yr [in]	100-yr [in]
5 min	0.49	0.55	0.60	0.68	0.74	0.80
10 min	0.84	0.96	1.05	1.19	1.30	1.41
15 min	1.09	1.24	1.36	1.54	1.69	1.83
30 min	1.58	1.90	2.12	2.46	2.72	2.98
60 min	2.10	2.58	2.92	3.41	3.80	4.18
2 hr	2.36	2.93	3.34	3.92	4.37	4.82
3 hr	2.63	3.29	3.76	4.42	4.94	5.46
6 hr	3.30	4.20	4.82	5.71	6.40	7.09
l2hr	3.90	5.00	5.77	6.86	7.70	8.55
24hr	4.50	5.81	6.72	8.01	9.01	10.00

CHART E-6

Intensity - Duration - Frequency Table

Location: Wilmington, NC

	Return Period					
Duration	2-yr [inlhr]	5-yr [in/hr]	10-yr [in/hr]	25-yr [in/hr]	50-yr [in/hr]	100yr [in/hr]
5 min	5.88	6.63	7.23	8.15	8.87	9.60
10 min	5.06	5.76	6.30	7.13	7.79	8.45
15 min	4.36	4.97	5.45	6.17	6.75	7.32
30 min	3.17	3.79	4.25	4.92	5.44	5.96
60 min	2.10	2.58	2.92	3.41	3.80	4.18
2hr	1.18	1.47	1.67	1.96	2.19	2.41
3hr	0.88	1.10	1.25	1.47	1.65	1.82
6hr	0.55	0.70	0.80	0.95	1.07	1.18
12 hr	0.33	0.42	0.48	0.57	0.64	0.71
24 hr	0.19	0.24	0.28	0.33	0.38	0.42

*Source: Master Drainage Improvement and Stormwater Management Plan, Vol. 1, McKim & Creed, June 1988

Intensity-Duration-Frequency Equation

I=G/(H+T)

for T from 5 to 120 minutes

Values of G and H

R	G	H
2	171	24
5	219	28
10	252	30
25	300	32
50	338	33
100	376	34

Where R is return period in years

Source: Master Drainage Improvement & Storm Water Management Plan, Vol. 1, McKim & Creed, June 1988.

F. PIPE SYSTEM DESIGN

1. Curb Inlet Design

The curb inlet design procedure is based on a standard City of Wilmington curb inlet with a 4-foot opening. The following procedure is used to locate inlets, however, other factors shall be considered such as location of low points, intersections and layout of pipe system.

a. Determine maximum gutter flow from the nomograph "flow in triangular gutter sections.' The known values of street longitudinal slope, S; street cross slope, Sx; allowable spread, T=8 feet; and roughness coefficient, n: are used to solve for the gutter capacity, Q.

b. Determine location of inlet using the rational formula rearranged such that:

A=Q/CI

Locate first inlet by trial and error with planimeter and topographic map such that gutter flow does not exceed capacity determined above. Check selection of "C" and "I" for the actual area determined.

c. The next inlets are located utilizing Charts F-1 and F-2. Determine the required curb opening length, Lt and enter in Chart F-2, with the ratio L/Lt where L is the actual curb opening of 4 feet for City standard curb inlets. This will yield the percentage of flow intercepted by each basin. The remainder of this flow shall be considered in determining the location of the next downstream inlet. This procedure is repeated as

necessary. The designer is encouraged to use the Catch Basin Design and Data Sheet, Chart F-4.

2. <u>Pipe Design</u>

After curb inlets have been preliminarily located, the pipe system may be designed. Use City of Wilmington standards for materials, minimum sizes, slopes, etc. Pipes shall be designed based on Manning's equation for gravity pipe flow.

Determine area, intensity, and runoff coefficients for the rational formula to obtain the design flow for each section of pipe. (Note - that the design is based on the sum of individual areas runoff and not the sum of the individual catch basin capacity). The designer is encouraged to use the Storm Drainage Design Data Sheet (Chart F-5) included in this manual.

Required pipe size may be determined by solving the following equation:

$$D = 16\left[\frac{Qn}{\sqrt{S}}\right]^{3/8}$$

where

D is minimum pipe diameter in inches
Q is design flow in cfs
n is Manning roughness coefficient
S is pipe slope in feet per foot

Check the preliminary design to ensure that velocity is within acceptable range.

The following example demonstrates use of the modified Manning's equation solution.

Given Q 20 cfs
Available slope is .4%
Pipe is concrete

Using n = .012 for concrete

$$D = 16\left[\frac{20x0.012}{\sqrt{0.004}}\right]^{3/8}$$

D = 26.38, therefore use 30" pipe

Storm Water Drainage Design

The columns of the table on page 5-27 are treated as follows:

(1) FROM -- The designation of the structure at the upper end of the pipe.
(2) TO -- The designation of the structure at the lower end of the pipe.
(3) SUB TOTAL AREA -- The drainage area contributing to the upstream end of the pipe, listed by designation. (ac)
(4) TOTAL AREA -- The total area (ac) draining to the upstream end of the pipe.
(5) INLET TIME -- Flow time (min) on the ground to the most remote inlet on the longest flow path (in terms of time) to the pipe being sized.
(6) PIPE TIME -- Sum of flow times (min) in pipe along the longest flow path (in terms of time) to the pipe being sized.
(7) TIME OF CONC. -- Col 5 + Col 6. This is the longest flow time of all possible paths from the most remote point in the system to the upstream end of the pipe being sized. It is the time of concentration (min).
(8) INTENSITY -- The rainfall intensity (in/hr) for the design storm of interest and the time of concentration (Col 7), taken from the applicable Intensity-Duration-Frequency Chart (See Page T-2-15), or computed from an IDF equation.
(9) RUNOFF COEF. -- The composite runoff coefficient for the areas in Col 3. This usually changes for the individual areas.
(10) DISCHARGE -- The design discharge (cfs). Q = CIA. (Col 9)*(Col 8)*(Col 4)
(11) SLOPE -- Invert of pipe (ft/ft), as decide within profile constraints.
(12) DIA. theo. -- Theoretical minimum pipe diameter (in), from the following equation:

$$D = 16\left[\frac{Qn}{\sqrt{s}}\right]^{(3/8)}$$

(13) SIZE -- Standard pipe size (in), as selected
(14) V full -- Full-flow average cross-sectional velocity (ft/sec), computed from the following equation:

$$V = \frac{\sqrt{s}D^{2/3}}{8.9n}$$

(15) LENGTH -- Length (II) of pipe segment of interest, from map or given data.
(16) SEGMENT TIME -- Row time (min) through pipe segment of interest, (Col 15)/((Col 14)*60)
(17) UPPER INVERT -- Invert elevation of the upper end of the pipe of interest, set by reference to upstream pipes and cover requirements.
(18) LOWER INVERT -- Invert elevation of the lower end of the pipe of interest, set equal to (Col 17)-((Col 11)*(Col 15)). Check for adequate cover; revise slope (Col 11) if necessary.
(19) TOP ELEVATION -- Ground elevation at upstream end, for reference.

3. Culvert Design

Whenever open channels are used to convey storm water, it may be necessary to cross under a roadway using a culvert. The culvert shall be designed to meet several hydraulic conditions based on headwater depth, full or partial flow, roughness, slope, entrance and exit types, and tail water depth.

Laboratory tests and field observations have determined that all these conditions can be grouped into two control conditions, inlet and outlet. Both types shall be considered separately in the design of culverts.

a. Inlet Control

Inlet control exists when the culvert barrel is not flowing full the entire length. The discharge capacity is controlled at the entrance by the depth of headwater (depth from culvert invert) and entrance geometry. Nomographs for inlet control are provided on Charts F-6 through F-10.

b. Outlet Control

Outlet control exists when the culvert barrel is flowing full the entire length, or only part of the length. This is why it is necessary to design for both types of control. The controlling factors in outlet control are tail water elevation in the outlet channel, slope, roughness, and length of culvert barrel.

Nomographs for outlet control are provided on Charts F-11 through F-15. In order to use these it is necessary to determine the coefficient of entrance loss, Ke. The Table on the following page is provided in order to determine the value of Ke.

To use the nomographs, enter the chart with a known pipe length and entrance coefficient on the curved portion and a trial pipe size. Extend a line between these two points on the respective graphs and mark the intersection with the Turning Line. Using the known flow, draw a line from the flow graph through the mark on the Turning Line and extend to the Head graph. Read head value, H, from the chart and use the following equation to compute headwater, HW for the given situation:

$$HW=H+ho-sL$$

where

H is Head as determined from the nomograph
ho is the tail water depth at the culvert outlet
s is the pipe slope, and
L is the length of the culvert

Compare the headwater values determined from the inlet control and outlet control procedures. The larger of the two is the controlling factor in culvert capacity.

Entrance Loss Coefficients*

Type of Structure and Design of Entrance	Coefficient, Ke
Pipe, Concrete	
Projecting from fill, socket end (groove-end)	0.2
Projecting from fill, sq. cut end	0.5
Headwa]l or headwall and wingwalls	
Socket end of pipe	0.2
Square-end	0.5
Rounded (radius = 1/12D)	0.2
Mitered to conform to fill slope	0.7
End section conforming to fill slope	0.5
Pipe, or Pipe-Arch, Corrugated Metal	
Projecting from fill (no headwall)	0.9
Headwall or headwall and wingwalls	
Square-edge	0.5
Mitered to conform to fill slope	0.7
End section conforming to fill slope	0.5

*Source: Design of Culverts, NRCD-Land Quality, August 1986

The following example demonstrates the use of the Nomographs provided:

Given:
Q=89c1s
Length of culvert =100ft
Pipe Slope = 2.0%
Inlet Type - Square Edge with Headwall
Pipe Type - Use RCP

Sizing for inlet control from the Chart F-6, a concrete pipe 48 inches in diameter has a headwater depth (HW/D) of 1.15 diameters or 4.6 feet. Check the embankment height to ensure at least one foot of free board remains. If inlet control design is satisfactory, check the 48-inch pipe for outlet control.

Determine entrance loss coefficient, Ke, from the preceding table. For concrete pipe with square edge and headwall, Ke is shown to be 0.5. Find the length of pipe on Chart F-11 for Ke = 0.5. Draw a line from this point to the size of pipe, which for this example would be 48”. Mark the intersection of this line with the

Turning Line. Next, draw a line from the know discharge of 89 cfs through the Turning Line at the mark previously made and extend to the line which gives a value of head in feet. For this example, the value of head, H, is 1.5 feet. Assume since no information is available that the tail water depth, ho, is equal to the diameter of the culvert. Compute the actual headwater depth as follows:

HW = H + ho - sL

HW= 1.5 +4.0-(02) (100)

HW= 3.5

Therefore inlet control is limiting actual flow since headwater depth is 4.6 feet. Use of 48" culvert is acceptable in this example.

When culverts are flowing full and the outlet is under tailwater conditions, outlet control charts should be used. The friction coefficient and other values for the pipe section should be estimated and the elevation (Za) of the upstream point on the HGL should be determined. This elevation should become the reference elevation (Zb) of the next section upstream.

4. <u>Energy Dissipaters</u>

Energy dissipaters are de-energizing devices and/or erosion resistant channel sections provided between storm drain or culvert outlets and existing downstream channels, to provide for stable flow transitions and reduce the velocity of storm water discharges sufficient to prevent erosion of the receiving channel.

These devices are needed for any storm drain outlet, culvert outlet, or channel outlet where the receiving channel or discharge area is subject to erosion.

Size of riprap as well as length and width of apron are controlled by the velocity of the outgoing water from the culvert. A simple and widely used method for estimating the stone size and dimensions for culvert aprons is provided in Charts F16, F-17, and F-18.

The velocity of flow can be determined by dividing the known flow **(Q)** by the culvert area: V=Q/A. Follow the steps on the charts to determine apron length to prevent scour at the outlet in questions The width of stone apron at the downstream edge should be approximately equal to the length except where conformance to the receiving channel is necessary. Chart F-17 is included as a guide to determine stone size, however, readily available stone sizes may be used with judgment.

CHART F-1

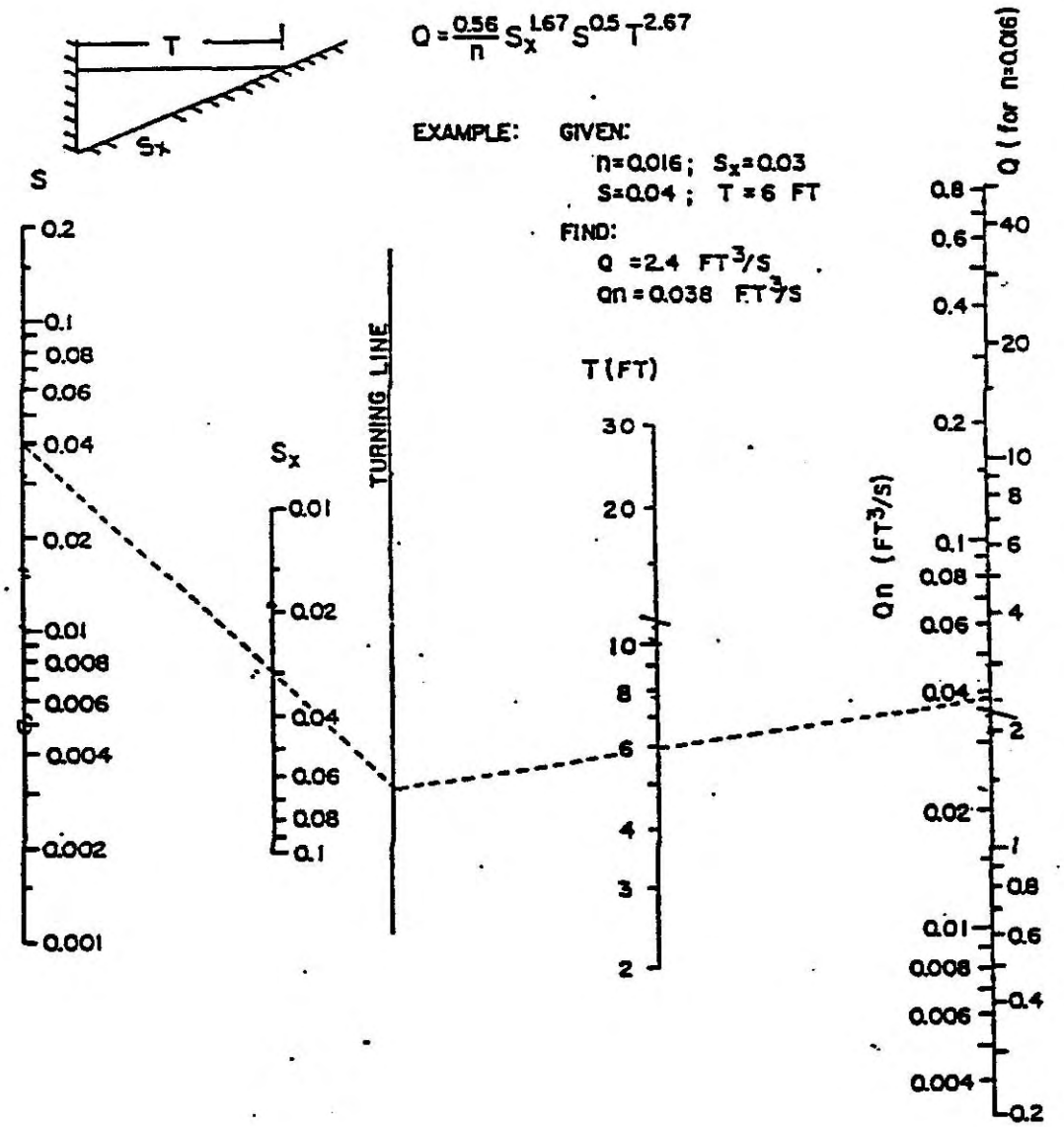

Source: FHWA-TS-84-202

Flow in triangular gutter sections.

CHART F-2

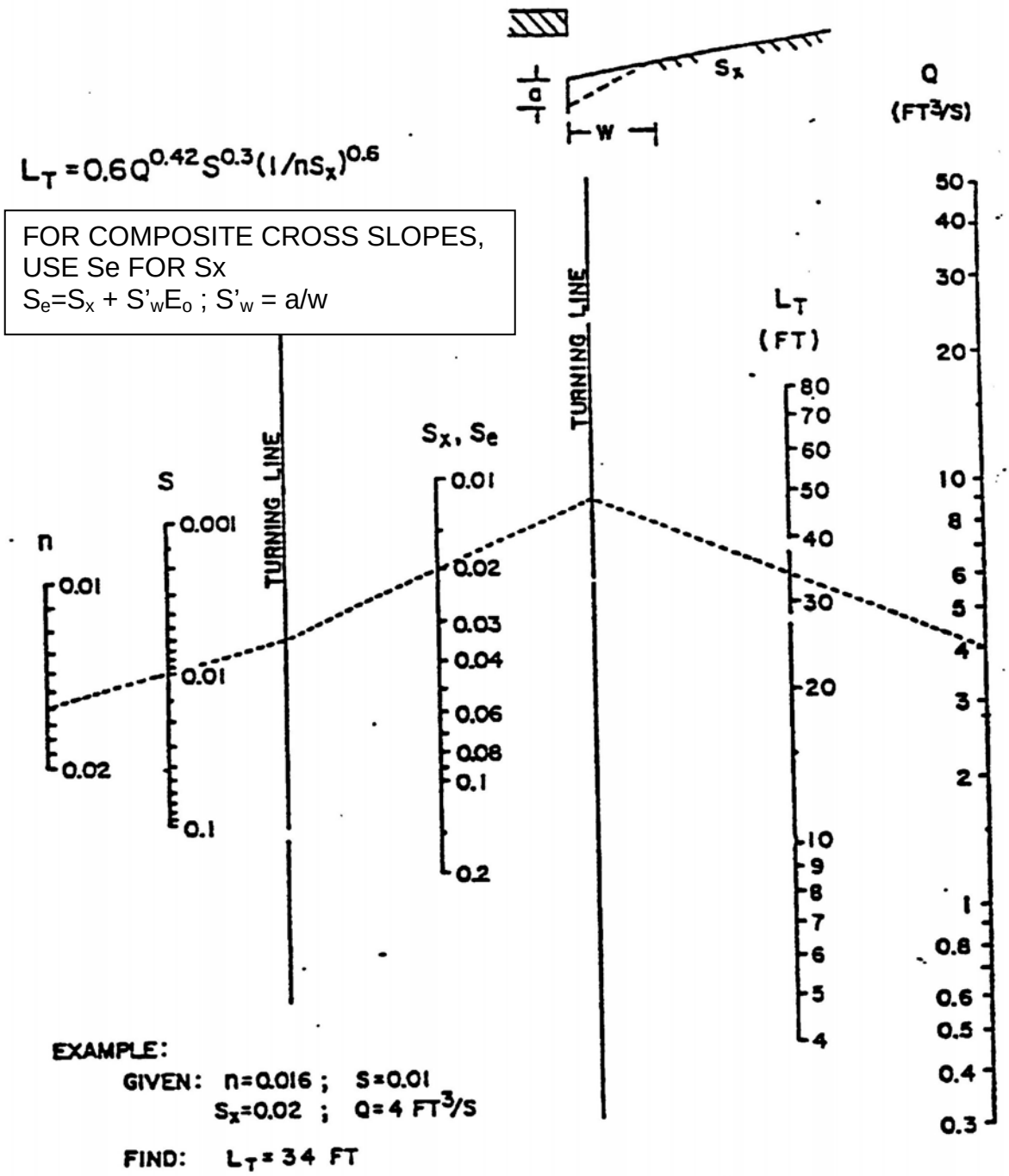

Source: FHWA-TS-84-202

CHART F-3

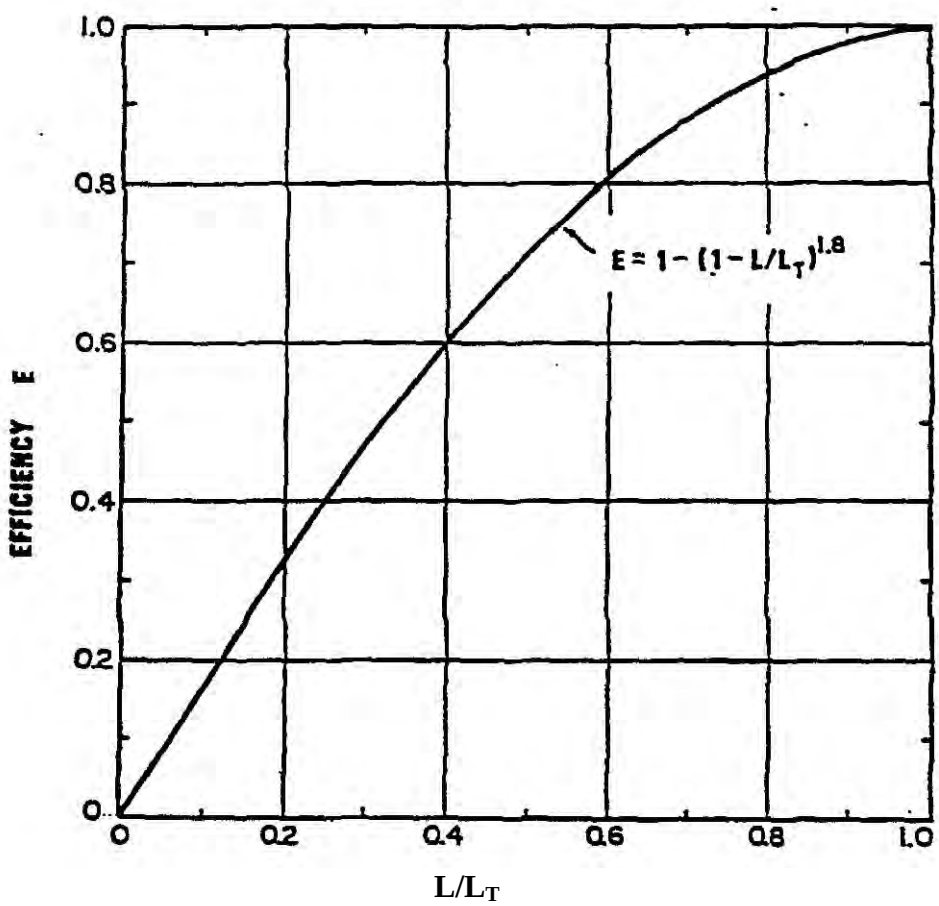

Source: FHWA-TS-84-202

CATCH BASIN DESIGN DATA SHEET

PROJECT_____ COMPUTED BY_____ DATE_____,_____.

LOCATION_____ CHECKED BY_____ SHEET_____ OF_____.

STORM FREQUENCY_____ YRS.

CATCH BASIN NO.	1 GUTTER SPREAD	2 LONGITUDINAL STREET GRADE (S_T)	3 MAX. GUTTER FLOW (C.F.S.)	4 INTERCEPTED FLOW (C.F.S.)	5 TRIAL COEF. OF RUNOFF	6 TRIAL INTENSITY (in.)	7 DERIVED AREA $= \frac{4 \times 5 \times 6}{}$	8 LENGTH OF DRAINAGE AREA	9 HEIGHT ABOVE MOST REMOTE POINT	10 COEF. OF RUNOFF	11 TIME OF CONCENTRATION (T_C)	12 ACTUAL INTENSITY (in.)	13 MAX. ALLOWABLE DRAINAGE AREA $= \frac{4 \times 10 \times 12}{}$	REMARKS (COLUMN 13 MUST BE W/N 10% OF COLUMN 7)

CHART F-4

STORM DRAINAGE DESIGN DATA SHEET

PROJECT:_____ COMPUTED BY:_____ DATE:_____

LOCATION:_____ CHECKED BY:_____ SHEET_____OF_____

STORM FREQUENCY_____YRS S=_____ h=_____ PIPE TYPE:_____ N:_____

1	2	3	4	5	6	7	8	9	10	11	12	13	14	15	16	17	18	19
LOCATION		AREA								PIPE DATA								
FROM	TO	SUB TOTAL (acres)	TOTAL (acres)	INLET TIME (min)	PIPE TIME (min)	Tc TIME OF CONC. (min)	I INTENSITY (in/hr)	C RUNOFF COEF.	Q=CIA (cfs)	SLOPE %	DIA. theo. (in)	SIZE (In)	V full (fps)	LENGTH (ft)	SEGMENT TIME (min)	UPPER INVERT (ft)	LOWER INVERT (ft)	UPSTRM TOP EL. (ft)

C=RUNOFF COEFICIENT
H=HEIGHT ABOVE INLET OF MOST REMOTE POINT
L=LENGTH OF DRAINAGE AREA
I=INTENSITY

N=COEFFICIENT OF FRICTION
S=SLOPE (%)
Q=FLOW (CFS)

NOTE: DESIGN IS BASED ON THE SUM OF THE AREAS AND NOT THE SUM OF THE DISCHARGES

CHART F-5

CHART F-6

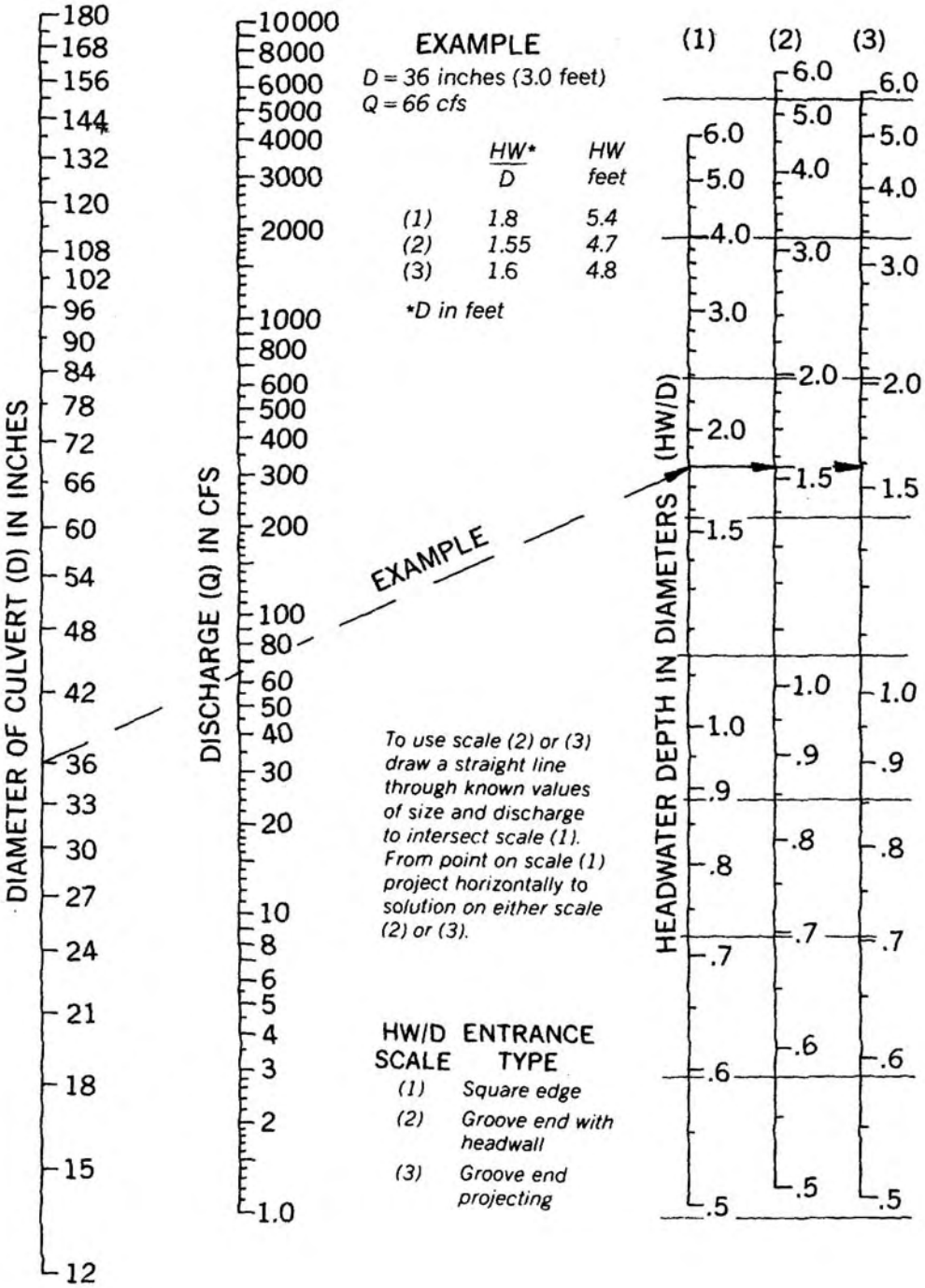

HEADWATER DEPTH FOR CONCRETE PIPE CULVERTS WITH INLET CONTROL

BUREAU OF PUBLIC ROADS JAN. 1963

HEADWATER SCALES 2 & 3
REVISED MAY 1964

CHART F-7

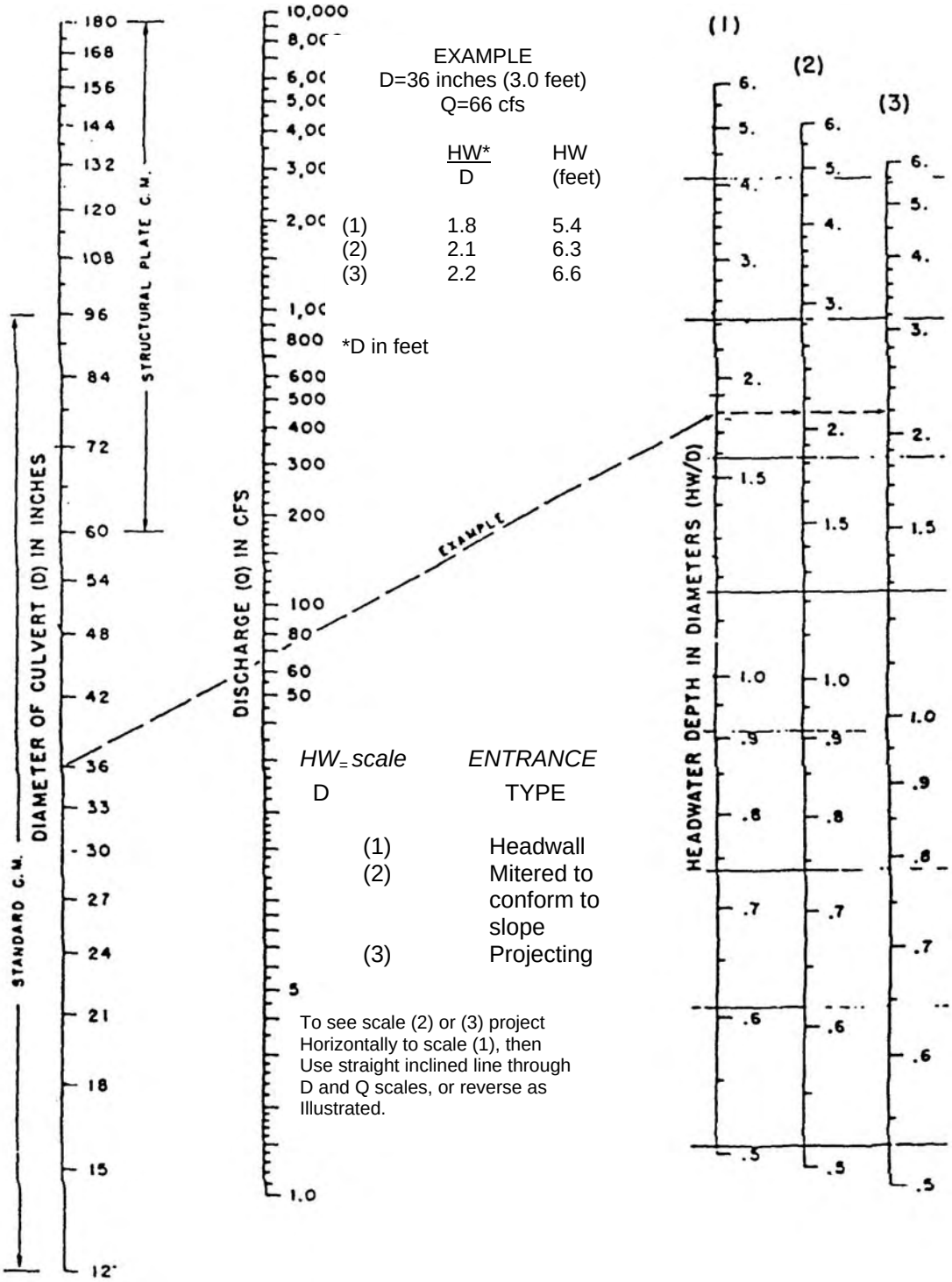

EXAMPLE
D=36 inches (3.0 feet)
Q=66 cfs

	HW*/D	HW (feet)
(1)	1.8	5.4
(2)	2.1	6.3
(3)	2.2	6.6

*D in feet

HW/D scale	*ENTRANCE* TYPE
(1)	Headwall
(2)	Mitered to conform to slope
(3)	Projecting

To see scale (2) or (3) project Horizontally to scale (1), then Use straight inclined line through D and Q scales, or reverse as Illustrated.

CHART F-8

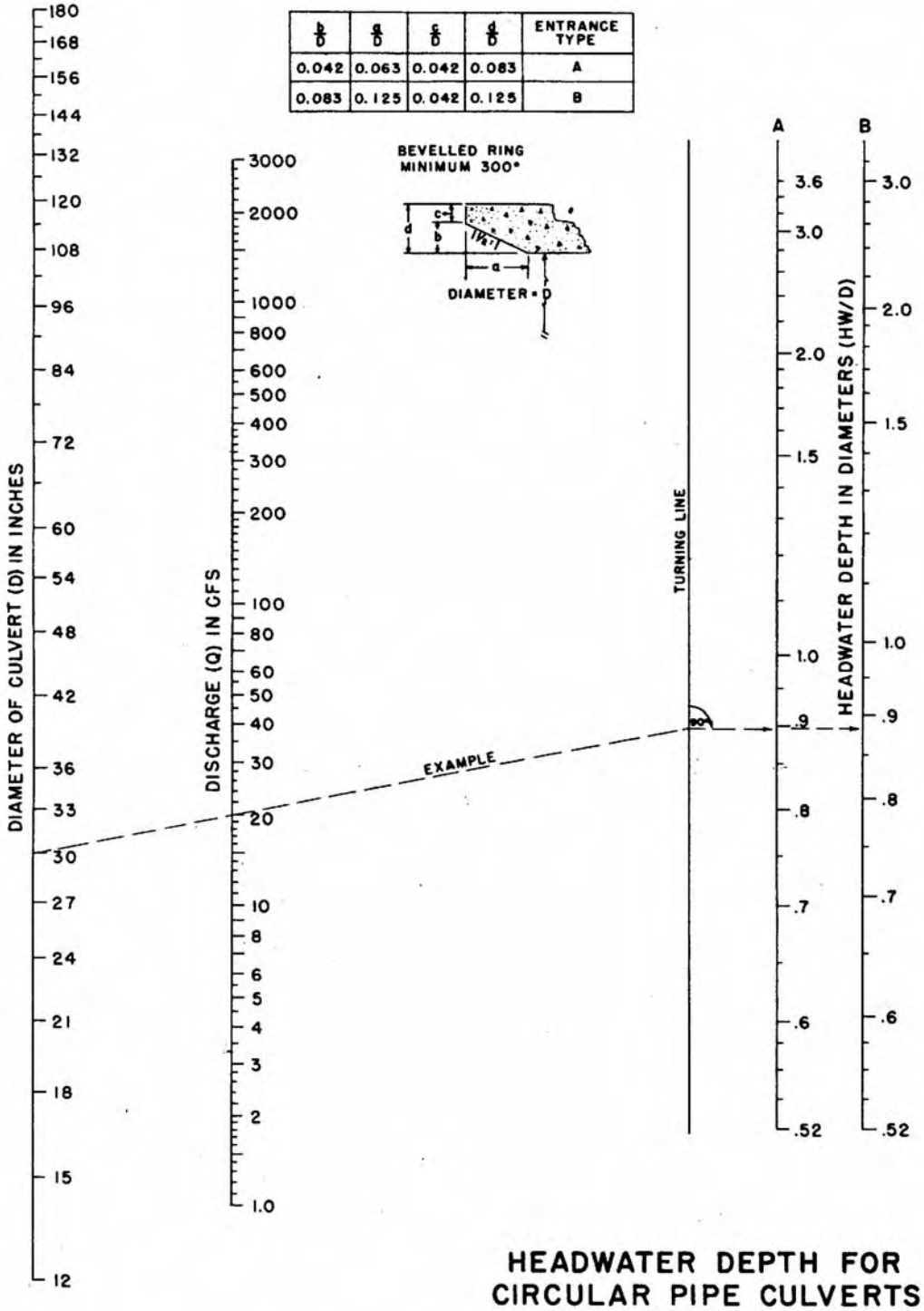

HEADWATER DEPTH FOR CIRCULAR PIPE CULVERTS WITH BEVELLED RING INLET CONTROL

FEDERAL HIGHWAY ADMINISTRATION
MAY 1973

CHART F-9

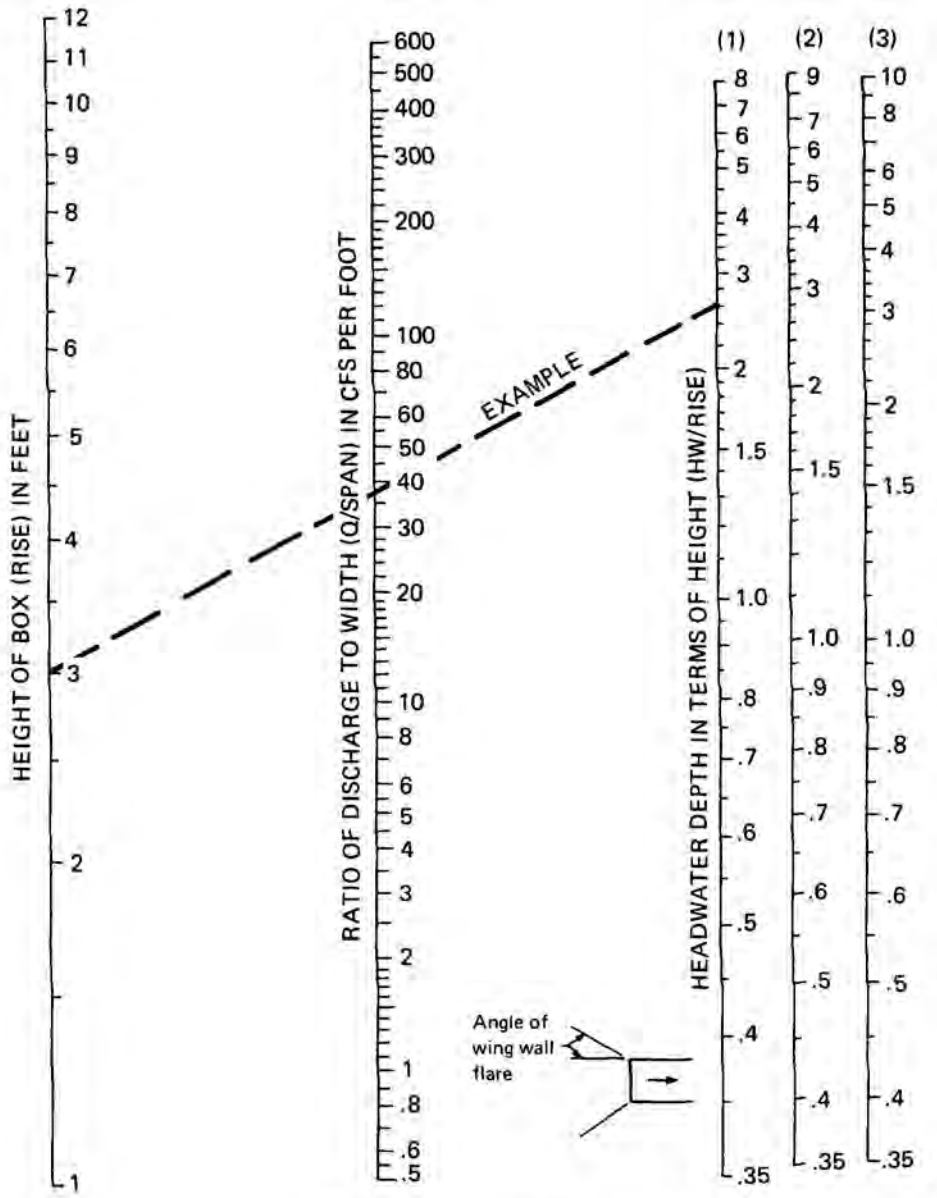

EXAMPLE

6' x 3' Box Q = 225 cfs
Q/Span = 37.5 cfs/ft

Inlet	*HW / Rise*	*HW ft*
(1)	*2.6*	*7.8*

HW / Rise SCALE	WING WALL FLARE
(1)	*30° to 75°*
(2)	*90° and 15°*
(3)	*0° (extensions of sides)*

To use scale (2) or (3) project horizontally to scale (1), then use straight inclined line through rise and Q scales, or reverse as illustrated.

BUREAU OF PUBLIC ROADS - JAN 1963

CHART F-10

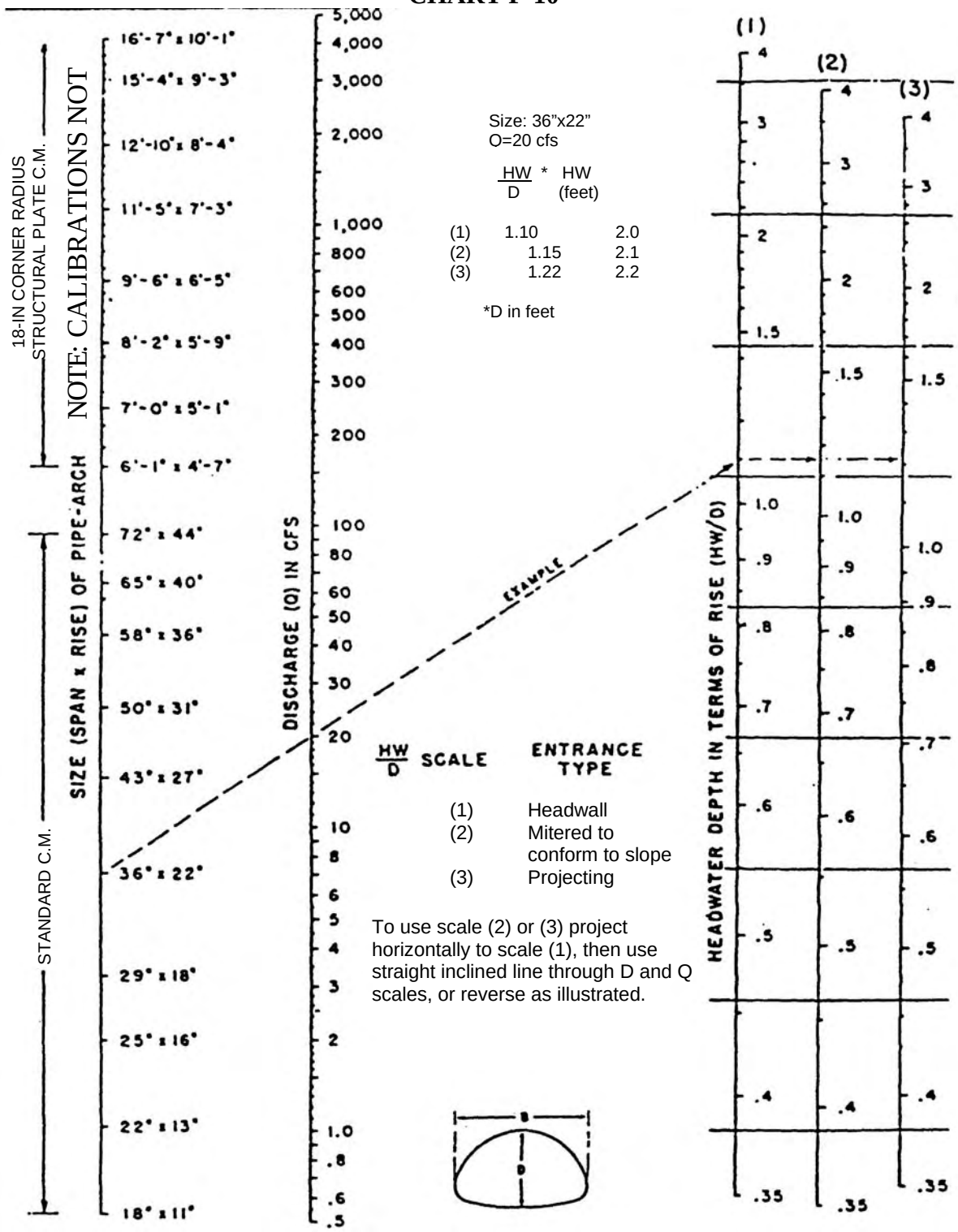

***ADDITIONAL SIZES NOT DIMENSIONED ARE LISTED IN FABRICATOR'S CATALOG**
BUREAU OF PUBLIC ROADS JAN. 1963

HEADWATER DEPTH FOR C.M. PIPE-ARCH CULVERTS WITH INLET CONTROL

CHART F-11

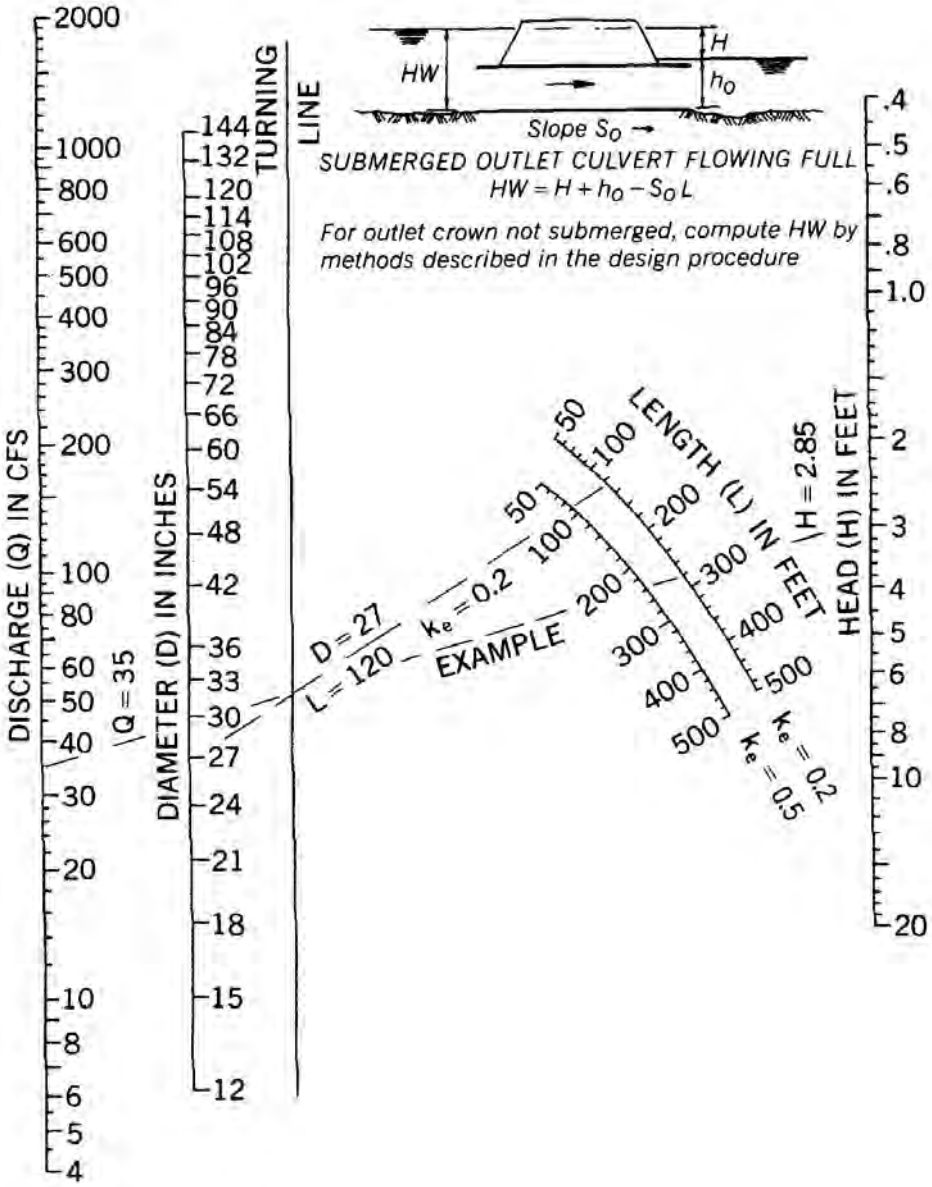

HEAD FOR
CONCRETE PIPE CULVERTS
FLOWING FULL
N=0.012

BUREAU OF PUBLIC ROADS JAN. 1963

CHART F-12

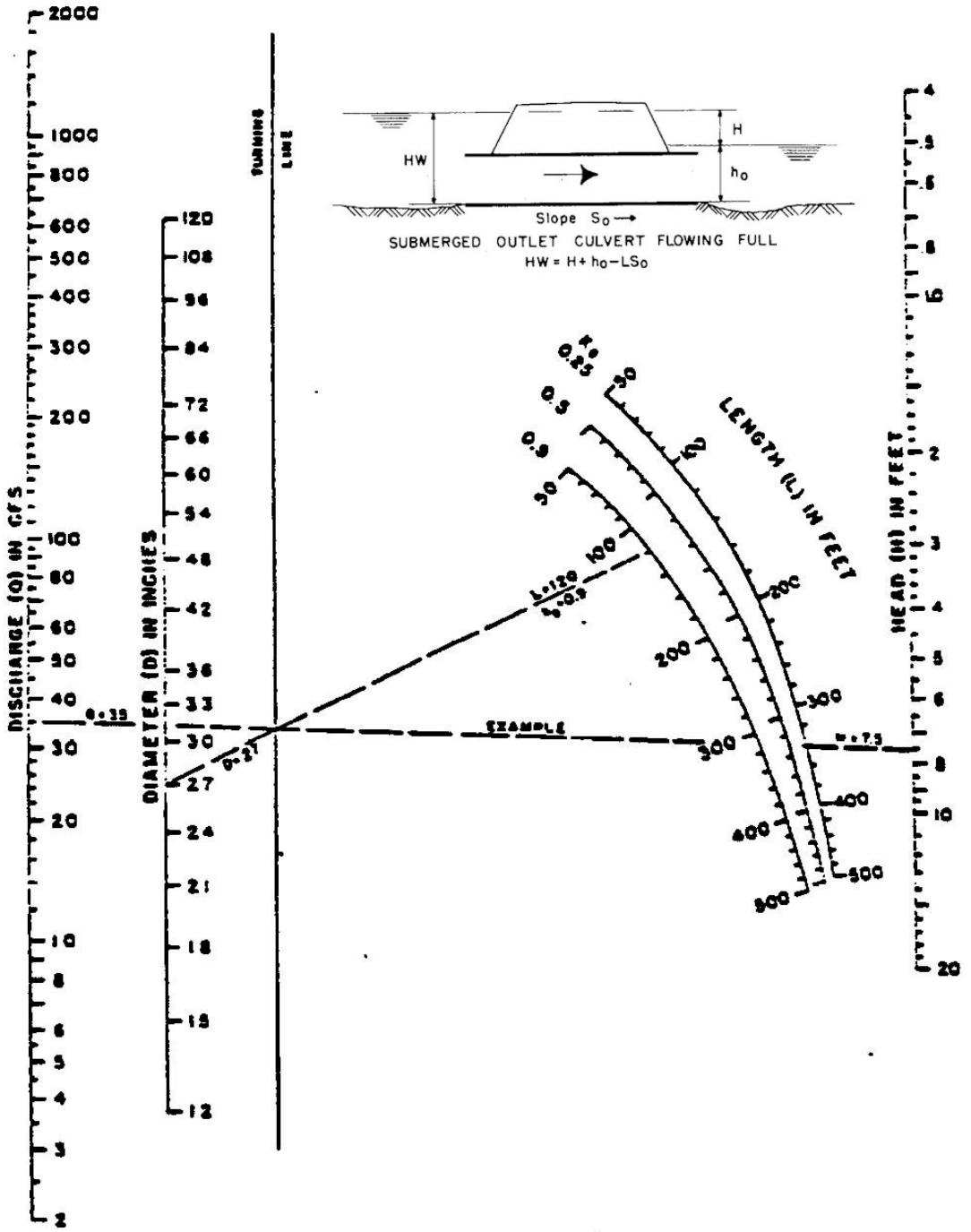

HEAD FOR STANDARD C. M. PIPE CULVERTS FLOWING FULL n = 0.024

BUREAU OF PUBLIC ROADS JAN 1963

CHART F-13

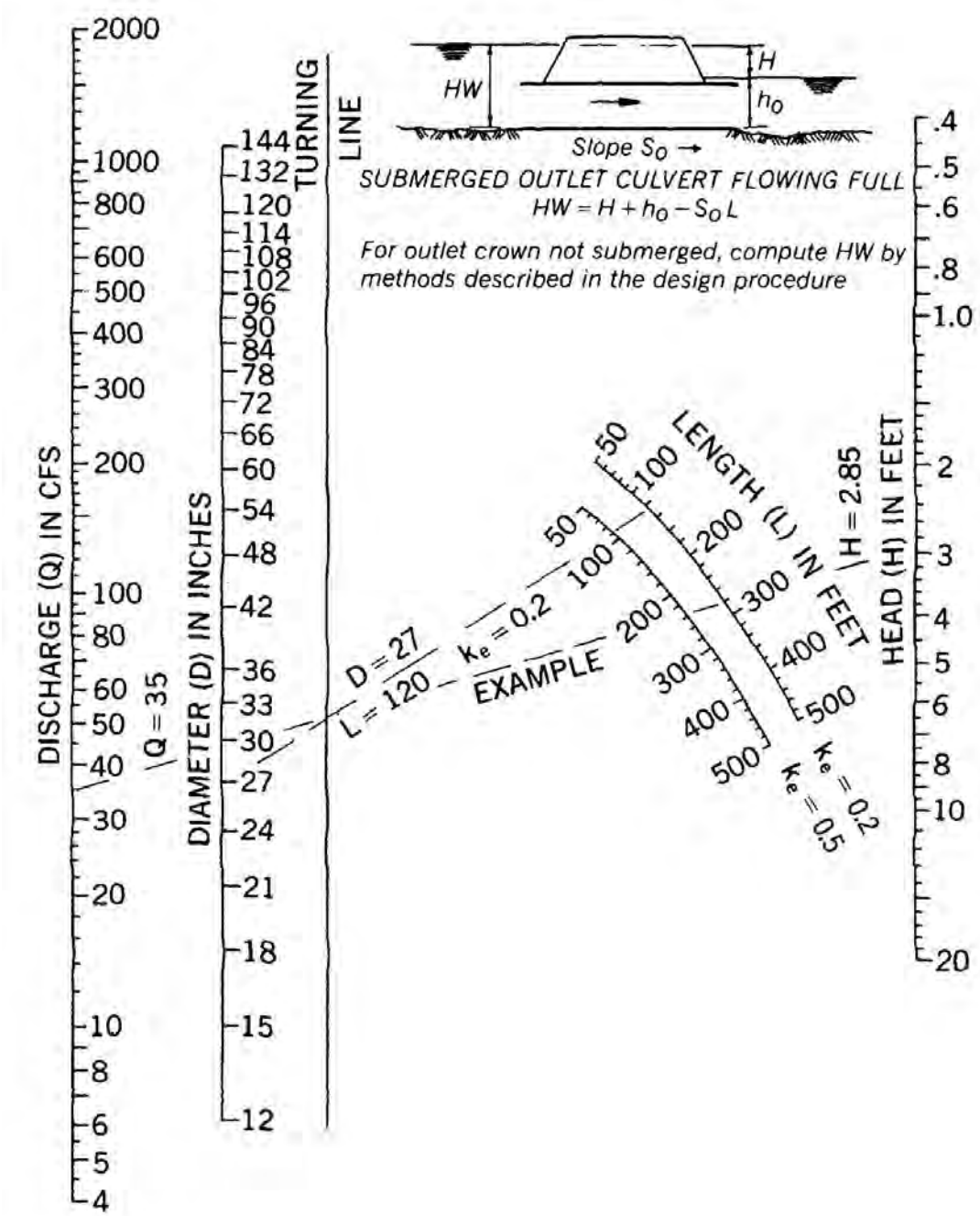

HEAD FOR
CONCRETE BOX CULVERTS
FLOWING FULL
N=0.012

BUREAU OF PUBLIC ROADS-JAN. 1963

CHART F-14

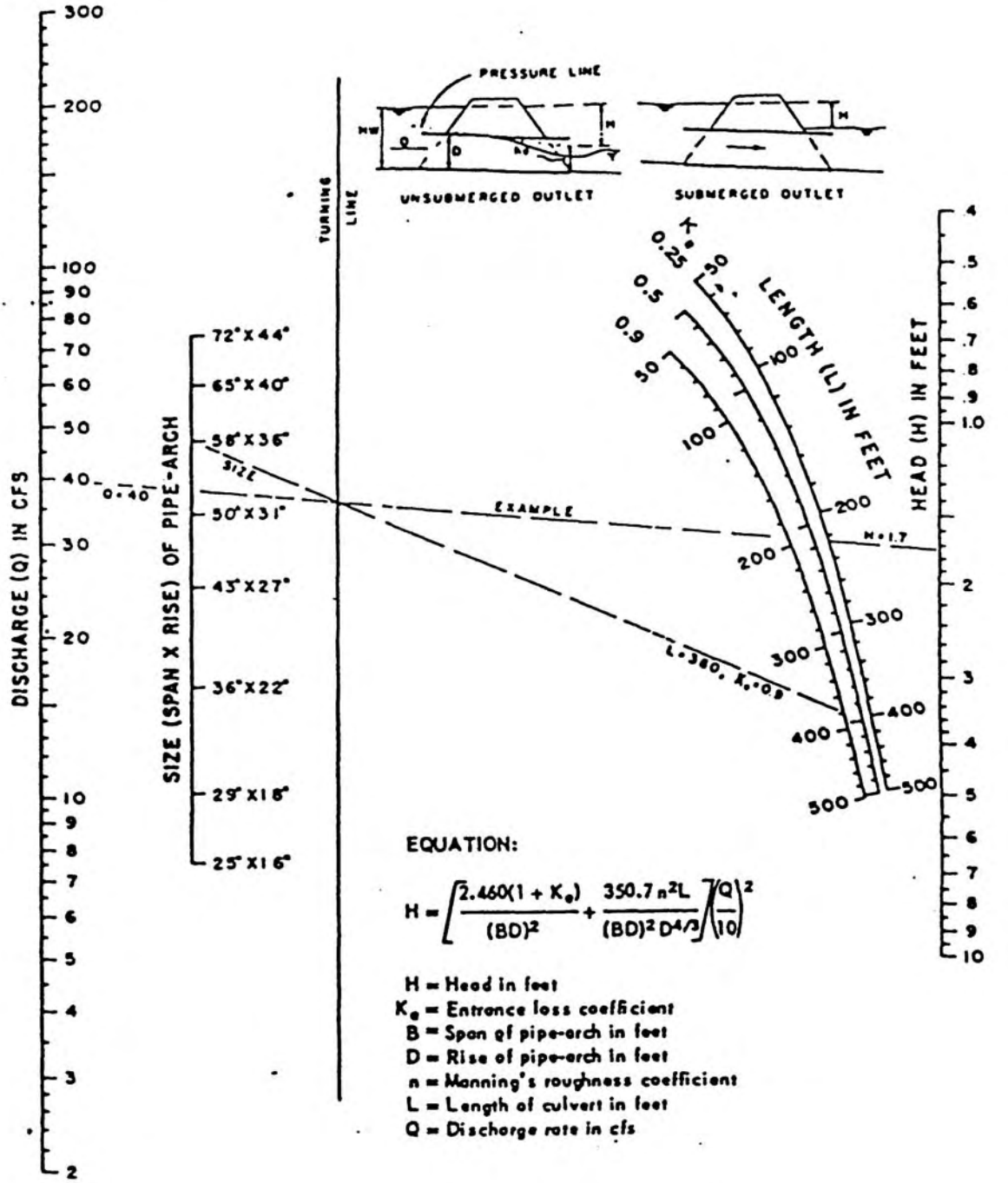

HEAD FOR
STANDARD C. M. PIPE-ARCH CULVERTS
FLOWING FULL
n = 0.024

PREPARED BY
BUREAU OF PUBLIC ROADS
JANUARY 1963

CHART F-15

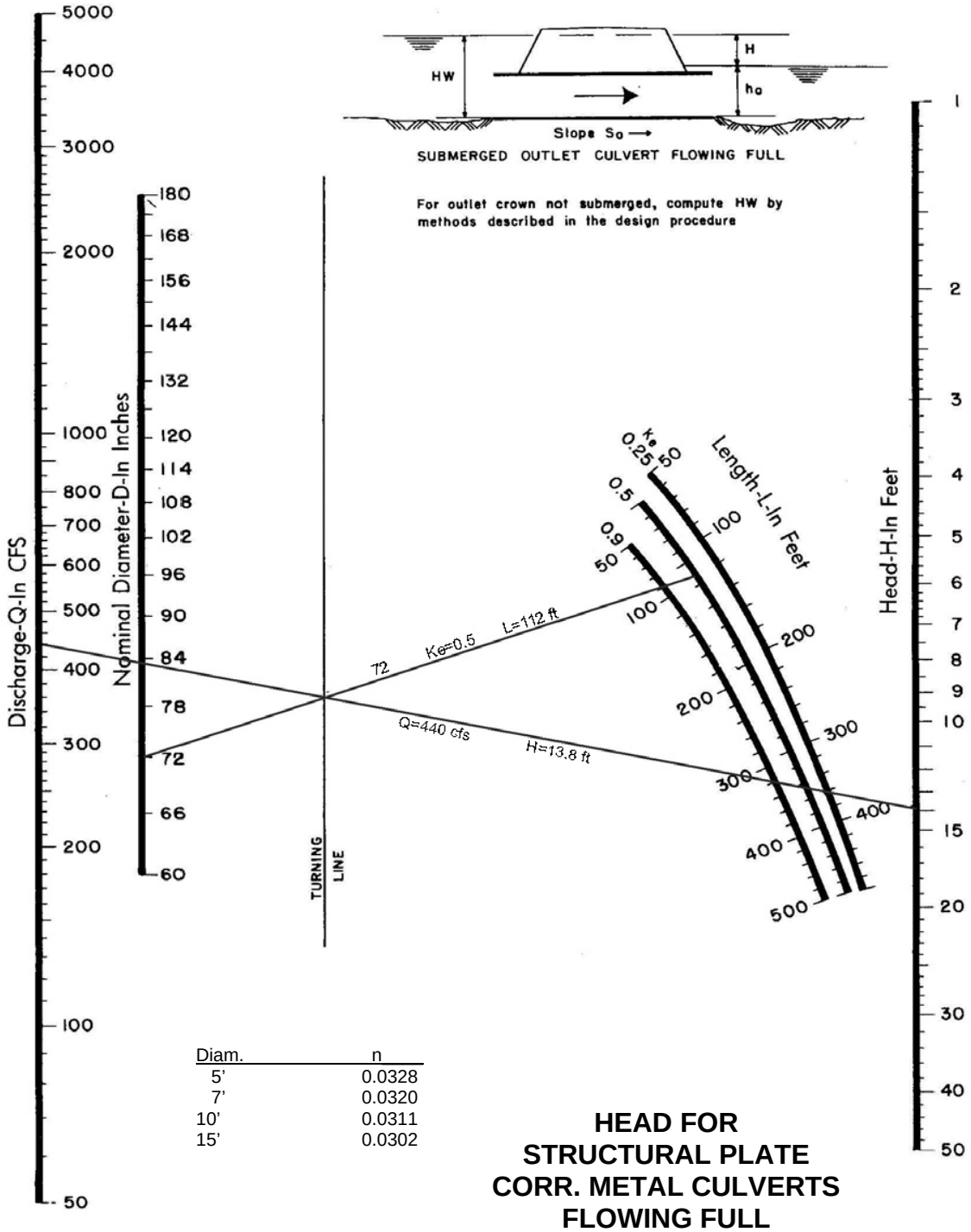

Diam.	n
5'	0.0328
7'	0.0320
10'	0.0311
15'	0.0302

HEAD FOR STRUCTURAL PLATE CORR. METAL CULVERTS FLOWING FULL N=0.0328 TO 0.0302

BUREAU OF PUBLIC ROADS-JAN. 1963

CHART F-16

NEW YORK DOT DISSIPATER METHOD FOR USE IN DEFINED CHANNELS

(Source: "Bank and Channel Lining Procedures", New York Department of Transportation, Division of Design and Construction. 1971)

Note: To use the following chart you must know:

1) Q full capacity
2) Q_{10}
3) V full
4) V_{10}

Where Q=discharge in cfs and V = Velocity in FPS.

ESTIMATION OF STONE SIZE AND DIMENSIONS FOR CULVERT APRONS

Step 1) Compute flow velocity V_o at culvert or paved channel outlet.

Step 2) For pipe culverts D_o is diameter

For pipe arch, arch and box culverts, and paved area channel outlets, $D_o=A_o$, where A=cross-sectional area of flow at outlet.

For multiple culverts, use $D_o=1.25xD_o$ of single culvert.

Step 3) For apron grades of 10% or steeper, use recommendations for next higher zone. (Zones 1 through 6).

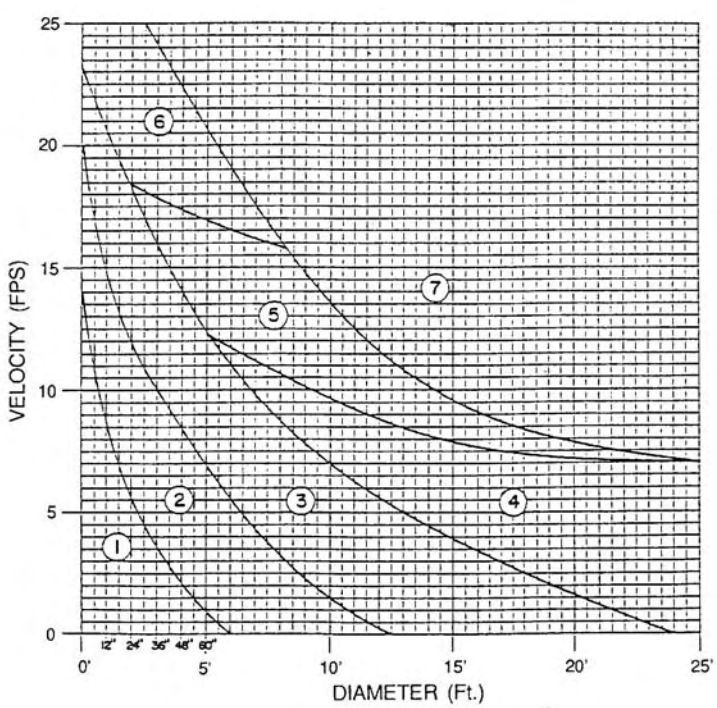

Source: Erosion and Sediment Control Planning and Design Manual, NC Department of NCRD, Land Quality Section, September 1988, Rev. 12/93.

CHART F-17

LENGTH OF APRON

ZONE	APRON MATERIAL	TO PROTECT CULVERT L1	TO PREVENT SCOUR HOLE USE L2 ALWAYS L2
1	STONE FILLING (FINE) CLASS A	3xDo	4xDo
2	STONE FILLING (LIGHT) CLASS B	3xDo	6xDo
3	STONE FILLING (MEDIUM) CLASS 1	4xDo	8xDo
4	STONE FILLING (HEAVY) CLASS 1	4xDo	8xDo
5	STONE FILLING (HEAVY) CLASS 2	5xDo	10xDo
6	STONE FILLING (HEAVY) CLASS 2	6xDo	10xDo
7	SPECIAL STUDY REQUIRED (ENERGY DISSIPATERS, STILLING BASIN OR LARGER SIZE STONE)		

Width = 3 times pipe diameter (min.)

DETERMINATION OF STONE SIZE FOR DUMPED STONE CHANNEL LININGS AND REVETMENTS

Step 1) Use figure F-18a to determine maximum stone size (e.g. for 12 Fps = 20" or 550 lbs.)

Step 2) Use figure F-18b to determine acceptable size range for stone (for 12 FPS it is 125-500 lbs. for 75% of stone, and the maximum and minimum range in weight should be 25-500 lbs.)

NOTE: In determining channel velocities for stone linings and revetment, use the following coefficients of roughness:

	Diameter (inches)	Mannings "n"	Minimum thickness of lining (Channels)	(inches) (Dissipaters)
Fine	3	0.031	9	12
Light	6	0.035	12	18
Medium	13	0.040	18	24
Heavy	23	0.044	30	36

Source: Erosion and Sediment Control Planning and Design Manual, NC Department of NRCD, Land Quality Section, September 1988, Rev. 12/93.

CHART F-18

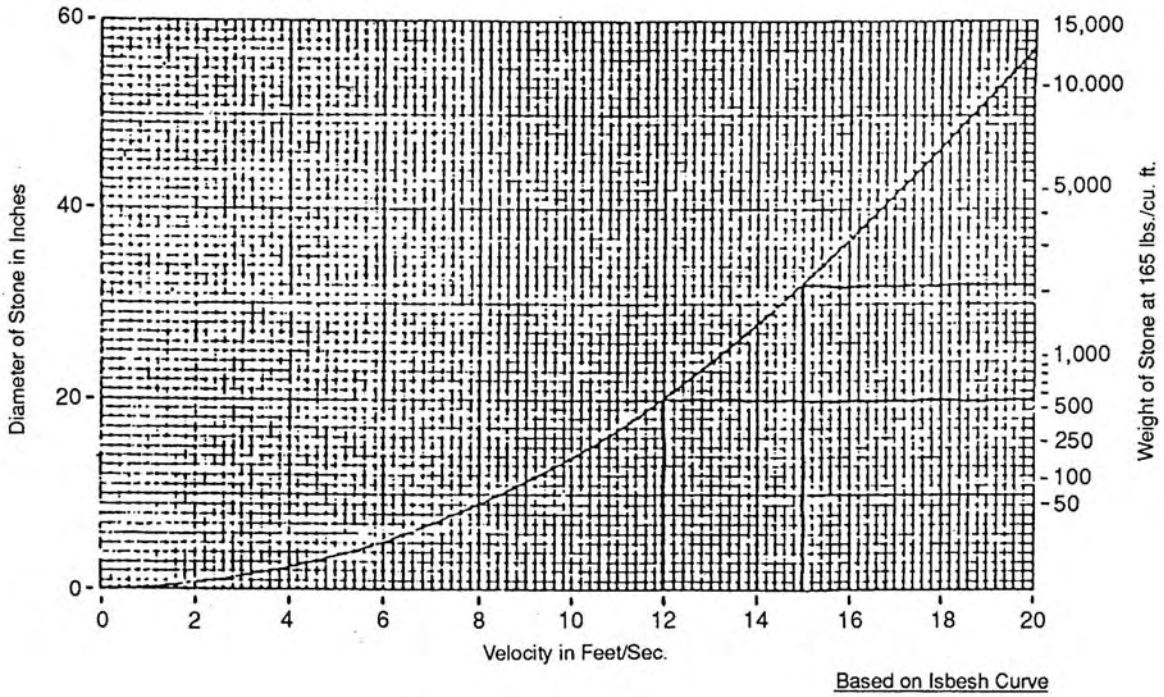

F-18a Max. Stone Size for Rip Rap

Maximum weight of stone required	Minimum and maximum range in weight of stones	Weight range of 75% of stones
(lbs.)	(lbs.)	(lbs.)
150	25 - 150	50 - 150
200	25 - 200	50 - 200
250	25 - 250	50 - 250
400	25 - 400	100 - 400
600	25 - 600	150 - 600
800	25 - 800	200 - 800
1,000	50 - 1,000	250 - 1,000
1,300	50 - 1,300	325 - 1,300
1,600	50 - 1,600	400 - 1,600
2,000	75 - 2,000	600 - 2,000
2,700	100 - 2,700	800 - 2,700

F-18b Gradation of Rip Rap

Source: "Band and Channel lining procedures." New York Department of Transportation, Division of Design and Construction, 1971.

Source: Erosion and Sediment Control Planning and Design Manual,
NC Department of NRCD, Land Quality Section, September 1988. Rev. 12/93.

G. OPEN CHANNEL DESIGN

In this area, proper consideration and design of the channel is of utmost importance, due to the high degree of potential erosion caused by the loose, non-cohesive soils native to the area.

Typical linings used to protect channel slopes include grasses, grass reinforced with a stabilization mat, stone riprap, paved slopes, and concrete fabric-form. The City encourages any introduction of new proven methods for lining channels. Alternative linings shall be approved by the City Engineer or his authorized representative.

1. Vegetative Channels

Typical channel cross sections include the trapezoidal cross section, triangular cross section, and the parabolic cross section. Chart G-2 may be used to determine geometric and hydraulic properties. Note that open channels to be dedicated to the City shall meet the geometric requirements stated in Section D. The triangular and parabolic section design guide is included for sites where these will be used as on-site water quality features for filtering and conveying storm water.

Channel capacity shall be computed using the Manning's equation and trial and en-or solution. The basic equation is:

$$Q = \frac{1.486 a r^{\frac{2}{3}} s^{\frac{1}{2}}}{n}$$

where:

Q is flow in cubic feet per second (cfs).
a is flow area in square feet (ft),
r is hydraulic radius which is equal to the channel area divided by the wetted perimeter,
s is the slope of the hydraulic grade line or channel bottom in ft/ft, and
n is the roughness coefficient of the channel.

Steps for determining channel design for using a vegetative lining proceeds as follows:

a. With the known flow rate, Q, and channel slope, s, select channel geometry type and lining type.

b. Determine permissible velocity from Chart G-3.

c. Estimate channel size by dividing Q by the permissible velocity. Then estimate channel width, depth and side slope to fit site conditions.

d. Compute the hydraulic radius of the trial channel configuration.

e. Determine Manning's n using vegetative retardance class from Chart G-4 and the graph below using the permissible velocity and hydraulic radius. It is

recommended to use at least one retardance class higher than the one determined from the chart.

f. Calculate velocity and flow using Manning's equation. Compare results with permissible velocity and required capacity.

g. Repeat the above steps as necessary adjusting channel geometry to obtain required capacity within velocity limitations.

The nomograph on the following page provides for the solution of Manning's equation for a trapezoidal channel with side slopes from 1 to 6 horizontal to 1 vertical. An example is shown in the lower right corner of the nomograph.

If the channel velocity exceeds 2 fps, a temporary lining may be required to stabilize the channel prior to the vegetation establishing. The procedure for designing temporary linings is the same as shown for riprap lined channels**.**

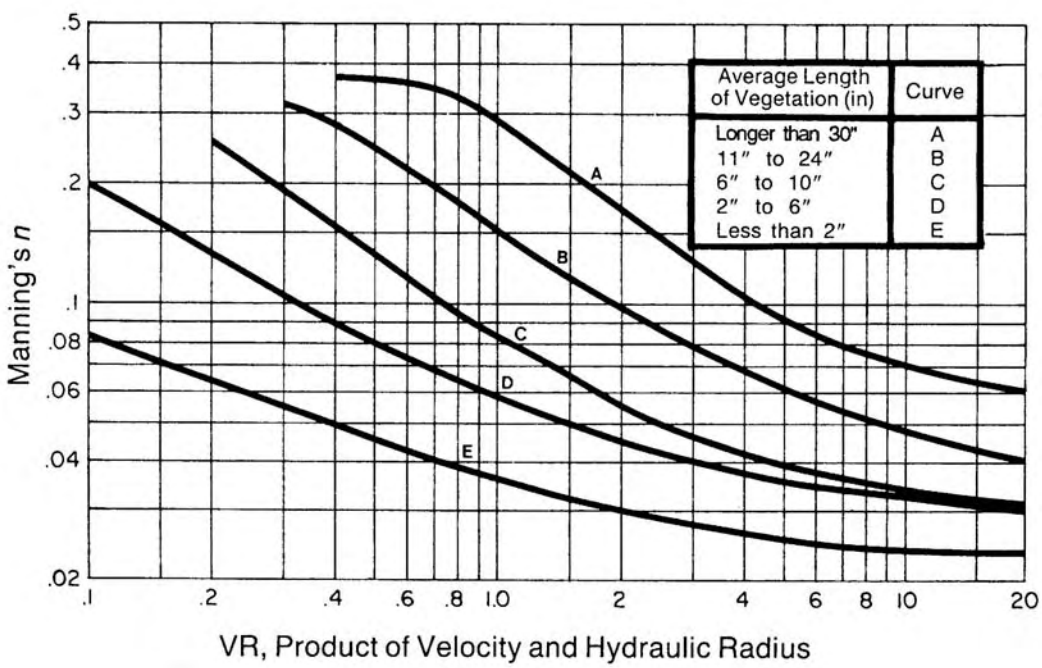

Manning's n related to velocity, hydraulic radius, and vegetal retardance.

Source: Erosion and Sediment Control Planning and Design Manual,
NC Department of NRCD, Land Quality Section, September 1988.

CHART G-1

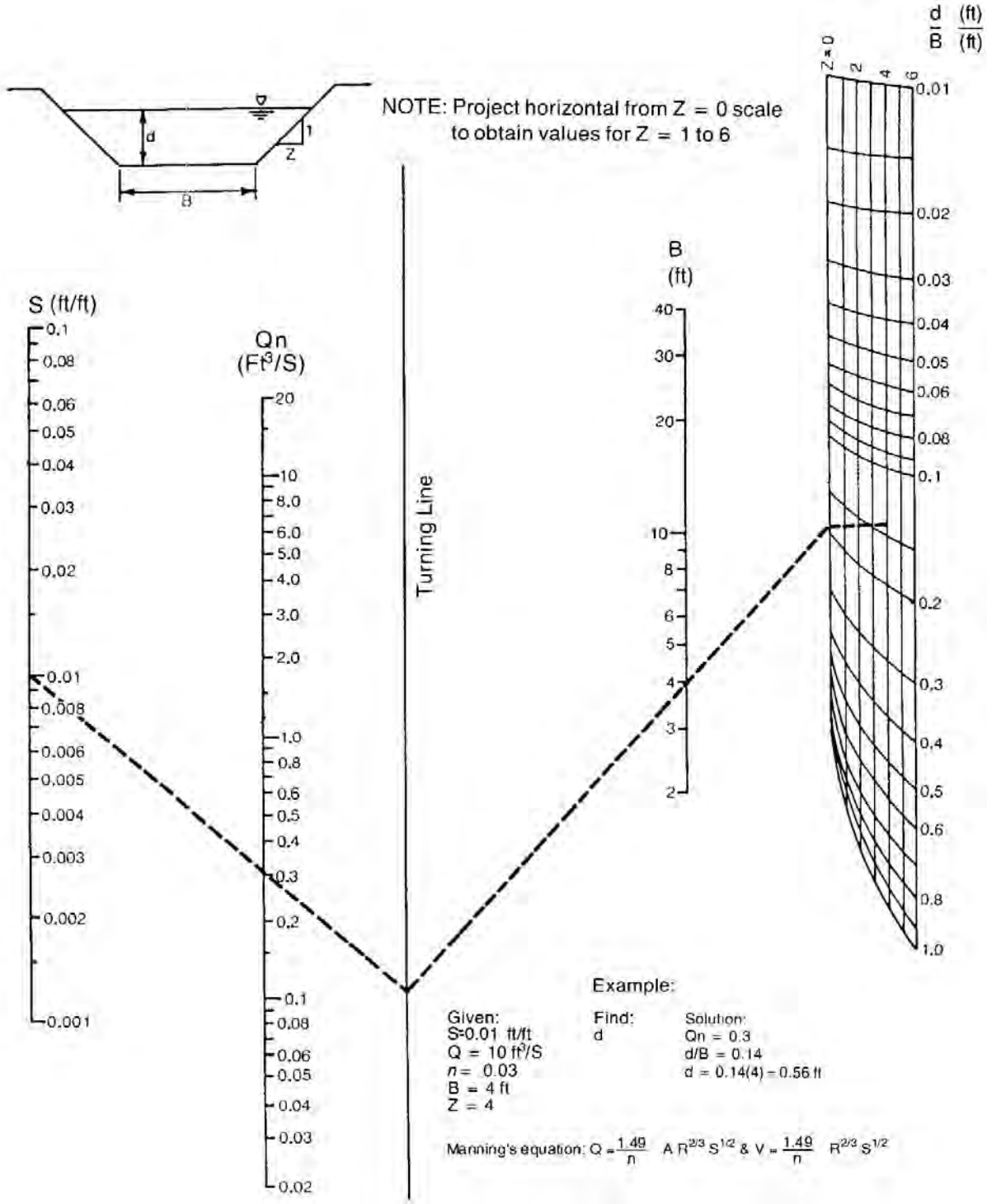

Solution of Manning's equation for trapezoidal channels of various side slopes.
Adapted from: FHWA-HEC. 15, Pg 40-April, 1988.

*Source: Erosion and Sediment Control Planning and Design Manual, NC Department of NRCD, Land Quality Section, September, 1988.

CHART G-2

V-Shape

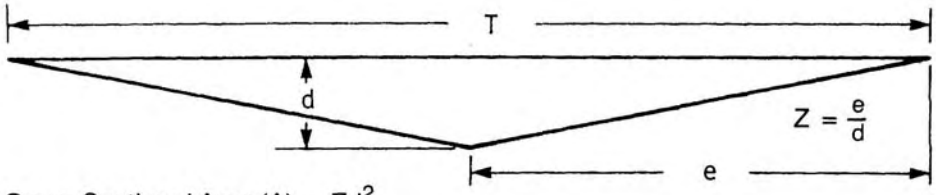

Cross-Sectional Area (A) = Zd^2
Top Width (T) = $2dZ$

Hydraulic Radius (R) = $\dfrac{Zd}{2\sqrt{Z^2 + 1}}$

Parabolic Shape

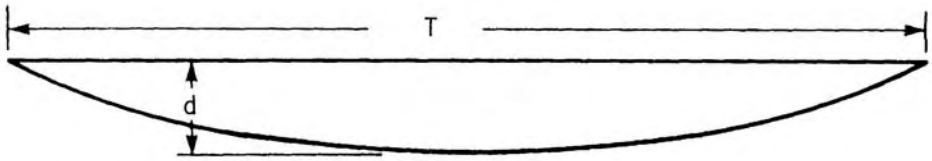

Cross-Sectional Area (A) = $\frac{2}{3}$ Td

Top Width (T) = $\frac{1.5\,A}{d}$

Hydraulic Radius = $\dfrac{T^2 d}{1.5T^2 + 4d^2}$

Trapezoidal Shape

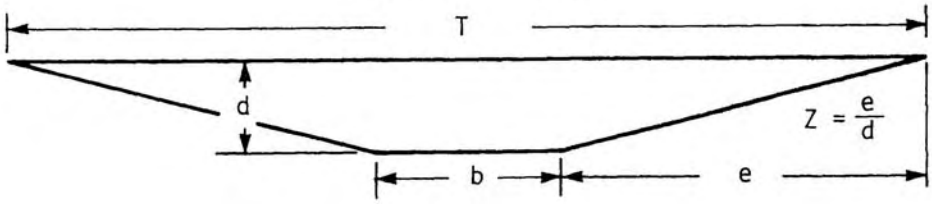

Cross-Sectional Area (A) = $bd + Zd^2$
Top Width (T) = $b + 2dZ$

Hydraulic Radius = $\dfrac{bd + Zd^2}{b + 2d\sqrt{Z^2 + 1}}$

Channel geometries for v-shaped, parabolic and trapezoidal channels.
Source: Erosion and Sediment Control Planning and Design Manual,
NC Department of NRCD, Land Quality Section, September 1988.

CHART G-3

Maximum Allowable Design Velocities for Vegetated Channels[1]

Typical Channel Slope	Soil Characteristics[2]	Grass Lining	Permissible Velocity[3] for Established Grass Lining (ft/sec)
0-5%	Easily Erodible Non-plastic (sand & silts)	Bermudagrass	5.0
		Tall Fescue	4.5
		Bahiagrass	4.5
		Kentucky bluegrass	4.5
		Grass-legume mixture	3.5
	Erosion Resistant Plastic (clay mixes)	Bermudagrass	6.0
		Tall Fescue	5.5
		Bahiagrass	5.5
		Kentucky bluegrass	5.5
		Grass-legume mixture	4.5
5-10%	Easily Erodible Non-plastic (sands & silts)	Bermudagrass	4.5
		Tall Fescue	4.0
		Bahiagrass	4.0
		Kentucky bluegrass	4.0
		Grass-legume mixture	3.0
	Erosion Resistant Plastic (clay mixtures)	Bermudagrass	5.5
		Tall Fescue	5.0
		Bahiagrass	5.0
		Kentucky bluegrass	5.0
		Grass-legume mixture	3.5
>10%	Easily Erodible Non-plastic (sand & silts)	Berniudagrass	3.5
		Tall Fescue	2.5
		Bahiagrass	2.5
		Kentucky bluegrass	2.5
	Erosion Resistant Plastic (clay mixtures)	Bermudagrass	4.5
		Tall Fescue	3.5
		Bahiagrass	3.5
		Kentucky bluegrass	3.5

* Source: USDA-SCS Modified, Erosion and Sediment Control Planning and Design Manual, NC. Department of Natural Resources and Community Development Land Quality Section, May 1994.

NOTE: [1]Permissible Velocity based on 10-yr storm peak runoff.

[2]Soil erodibility based on resistance to soil movement from concentrated flowing water.

[3]Before grass is established, permissible velocity is determined by the type of temporary liner used.

CHART G-4

Retardance Classification for Vegetal Cover

Retardance	Cover	Condition
A	Reed canarygrass	Excellent stand, tall (average 36”)
	Weeping lovegrass	Excellent stand., tall (average 30”)
B	Tall Fescue	Good stand, uncut, (average 18”)
	Bermudagrass	Good stand, tall, (average 12”)
	Grass-legume mixture (tall fescue, red fescue, sericea lespedeza)	Good stand, uncut
	Grass mixture (timothy, smooth bromegrass or orchardgrass)	Good stand, uncut (average 20”)
	Sericea lespedeza	Good stand, not woody, tall (average 19”)
	Reed canarygrass	Good stand, cut (average 12-15”)
	Alfalfa	Good stand, uncut (average 11”)
C	Tall Fescue	Good stand, (8-12”)
	Bermudagrass	Good stand, cut (average 6”)
	Bahiagrass	Good stand, uncut (6-8”)
	Grass-legume mixture summer (orchardgrass, redtop and annual lespedeza	Good stand, uncut (6-8”)
	Centipede grass	Very dense cover (average 6”)
	Kentucky bluegrass	Good stand, headed (6-12”)
	Redtop	Good stand, uncut (15-20”)
D	Tall Fescue	Good stand, cut (34”)
	Bermudagrass	Good stand, cut (2.5”)
	Bahiagrass	Good stand, cut (3-4”)
	Grass-legume mixture fall-spring (orchard-grass, redtop and annual lespedeza)	Good stand, uncut (4-5”)
	Red fescue	Good stand, uncut (12-18”)
	Centipede grass	Good stand, cut (34”)
	Kentucky bluegrass	Good stand, cut (3-4”)
E	Bermudagrass	Good stand, cut (1.5”)
	Bermudagrass	Burned stubble

Modified from: USDA-SCS. 1969, Engineering Field Manual

2. **Riprap Lined Channels**

The important consideration in design of riprap linings is that the velocity is not so great that the stones become dislodged.

Chart G-5 is provided to determine Manning's 'n" coefficient at different depths of flow.

The method in choosing the size riprap and depth is trial and error. The basic equation for use in design is:

Equation **T = (y) (d) (s)**
where:

T is shear stress in lb/ft,
y is 62.4 lb/ft, density of water,
d is flow depth in feet, and
s is channel slope.

The value of "d" is determined by the procedure described above or by using the nomograph for trapezoidal channels. Once the depth is determined, the assumed roughness coefficient should be checked with Chart 0-5. With the known channel slope, s, compute T using the above equation. This computed value should be less than T as shown in Chart G-6.

CHART G-5

Manning's Roughness Coefficient

Lining Category	**Lining Type**	**n-value** **n-value for Depth Ranges**		
		0-0.5 ft (0-15cm)	**0.5-2.0 ft (15—60cm)**	**>2.0 ft (>60cm)**
Rigid	Concrete	0.015	0.013	0.013
	Grouted Riprap	0.040	0.030	0.028
	Stone Masonry	0.042	0.032	0.030
	Soil Cement	0.025	0.022	0.020
	Asphalt	0.018	0.016	0.016
Unlined	Bare Soil	0023	0.020	0.020
	Rock Cut	0.045	0.035	0.025
Gravel Riprap	1-inch (2.5-cm) D_{50}	0.044	0.033	0.003
	2-inch (5-cm) D_{50}	0.066	0.041	0.034
Rock Riprap	6-inch (15-cm) D_{50}	0.104	0.069	0.035
	12-inch (30-cm)D_{50}	--	0.078	0.040

CHART G-6

Permissible Shear Stresses for Riprap and Temporary Liners

Lining Category	Lining Type	Permissible Unit Shear Stress, Td (lb/ft^2)
Temporary	Woven Paper Net	0.15
	Jute Net	0.45
	Fiberglass Roving:	
	Single	0.60
	Double	0.85
	Straw with Net	1.45
	Curled Wood Mat	1.55
	Synthetic Mat	2.00
Gravel	d_{50} Stone Size (inches)	
	1	0.33
	2	0.67
	3	2.00
Rock Riprap	6	3.00
	9	4.00
	12	5.00
	15	6.00
	18	7.00
	21	7.80
	24	8.00

* Source: Erosion and Sediment~ Control Planning and Design Manual, NC Department of NRCD, Land Quality Section, December 1993.

3. Alternative Liners

When the velocity in an open channel exceeds permissible velocities for vegetation shown in Chart G-3, it becomes necessary to use a permanent protective lining on the slopes and bottom. Riprap linings have been discussed in the previous section, and does provide a very economical and dependable protection for most flows if sized properly.

There are several other linings available which may be preferred due to cost, appearance, maintenance, and dependability. Among some available sources are fabric-form, concrete paving, gabions, brick or a combination of any of these, i.e. paved channels with grassed side slopes, if site conditions warrant.

Chart G-7 provides the Manning's roughness coefficient "n" to assist in the analysis of open channels.

CHART G7

Values of "n" in Manning Formula

Lining	**n**
Brick	.013-015
Concrete	
Trowel Finish	.013
Float Finish	.015
Unfinished	.017
Concrete, Bottom Float Finished, with Sides of	
Dressed Stone	.017
Random Stone	.020
Cement Rubble Masonry	.025
Dry Rubble or Riprap	.030
Fabric-Form (Uniform Cross-Section)	.015
Fabric-Form (Filter Points)	.025-030
Gabions	.030-035
Gravel, Bottom, with Sides of	
Random Stone	.023
Riprap	.033

*Sources: F. E. McJunkin and PA Vesilind, "Practical Hydraulics for the Public Works Engineer", Reprinted from Public Works Magazine

Fabric Forms for Concrete, Tri-State Consultants, 1988
The Rena Mattress, Maccaferri Gabions, 1983

H. STORM WATER DETENTION PONDS

1. Design Objective

Storm water detention ponds shall be designed such that the peak discharge from the site in the 10-year storm after development shall not exceed the peak discharge from the same site in the 10-year storm prior to development. An emergency spillway shall be provided such that it can handle the 50-year storm assuming the principal spillway is obstructed or not operating properly. The elevation of the top of the dam shall be a minimum of 0.5 feet above the peak water surface elevation for the 50-year storm.

2. Submission Requirements

The information outlined below shall accompany storm water detention facilities designs submitted for approval based on the size of watershed.

a. Information required for facilities where the watershed is one acre or greater.

1. A plan showing the drainage area of the watershed in sufficient detail to confirm the area and composition.
2. A site plan showing the detention basin with complete construction details.
3. Detailed computations of design discharges, including the peak 10-year discharge prior to development, the peak 50-year discharge after development, and the peak 10-year discharge after development.
4. Detailed computations of the stage-storage relationship, including a graph or table of water-surface elevation versus volume of storage.
5. Detailed computations of the stage-discharge relationship, including a graph or table of water- surface elevation versus total discharge through the outlet system.
6. Detailed computations of flood routing for the 10-year storm, in suitable time increments, including a table showing at least the four columns of elapsed time, accumulated storage, stage, and discharge.
7. Supporting calculations for the arrangement of the emergency spillway, particularly showing the determination of the elevations of the crest and top of dam, and the length of the spillway.
8. Detailed calculations for energy dissipaters design and outlet velocities for the 10-year storm.
9. Evaluation of composite hydrographs in downstream system, when required by the City.

b. Information required for facilities where the watershed is less than one (1) acre.

1. A plan showing the drainage area of the watershed in sufficient detail to confirm the area and composition.
2. A site plan showing the detention basin with complete construction details.
3. Computations of the peak 10-year discharge prior to development and the 10-year discharge after development. The designer should also evaluate the system for the peak 50-year discharge after development.
4. Calculations of available storage and outlet structure hydraulics necessary to show that the post development discharge will be no greater than the predevelopment discharge based on a 10-year storm.
5. Calculations for energy dissipation of the outlet of the system for the 10-year storm.
6. The volume shall be calculated using the equation for estimated volume of required storage as written in Section H.3.

3. System Analysis

The methods described below are the methods that will be used by the City to review the design. Other methods may be used by the designer to design or to analyze the pond and system. In cases where the designer proposes to use computer programs or desktop methods not recognizable by the City Engineer, the designer shall show that the pond adequately performs according to the following analysis.

a. Hydrograph Formulation

The three important aspects of the design hydrograph are the magnitude of the peak discharge the volume of run-off (area under the hydrograph), and the hydrograph shape. A simplified method of hydrograph formulation, based on these aspects, acceptable for analyzing detention pond designs from watersheds of less than one square mile. (For background, see Malcom, 1987.) For larger watersheds, detailed hydrologic modeling shall be done by accepted methods. The simplified method for hydrograph formulation is:

1. Estimate the Peak- The peak discharge of the hydrograph of the 10-year storm may be estimated by applying the Rational method as described in Section E, with the following provisions:

   (a) Determine C, the composite run-off coefficient, in the conventional way
   (b) Compute I, the applicable rainfall intensity (in/hr), for the 10-year storm at the appropriate time of concentration. Determine time of concentration by the Kirpich equation Determine the rainfall intensity by the equation or graph given in Section E.
   (c) Measure the watershed area contributory to the pond as delineated on a suitable topographic map.

2. Estimate the Volume of Run-off- The volume of run-off may be estimated by applying the run-off estimation methods of the Soil Conservation Service to an appropriate design storm. In this application, the design storm is taken to be the 10-year storm of six hours duration, which is a depth of 4.8 inches in Wilmington. (The six-hour duration is selected in this method to yield a hydrograph comparable in size to that produced in SCS TR-55, Corps of Engineers HEC-1 and similar methods.) The total volume of the run-off is the run-off depth multiplied by the watershed area The volume estimate may be made as follows:

   (a) Estimate the effective SCS Curve Number for the watershed under fixture development conditions. Refer to the SCS Soil Survey of New Hanover County to determine the soil types distributed in the watershed. Use Tables H-1 and H-2 to estimate the effective Curve Number for the watershed from observed soil types and cover conditions, or use SCS publications. Calculate a composite CN if the site should require one.

   (b) From the six-hour, 10-year rainfall and the applicable SCS Curve Number, compute the run-off depth by the SCS procedure:

TABLE H-1
Hydrologic Soil Groups for Local Soil Types

Map Symbol	Hydrologic Soil Group	Soil Type
Ba	D	Bayboro
Be	A	Baymeade
Bh	*	Baymeade-Urban Land Complex
Bp	*	Borrow Pit
Cr	C	Craven
DO	D	Dorovan
JO	D	Johnston
Ke	A	Kenansville
Kr	A	Kureb
Ku	*	Kureb-Urban Land Complex
La	A	Lakeland
Le	B/D	Leon
Lo	*	Leon-Urban Land Complex
Ls	C	Lynchburg
Ly	B/D	Lynn Haven
Mp	*	Mine Pits
Mu	A/D	Murville
Nh	A	Newhan
No	B	Norfolk
On	B	Onslow
Pm	D	Pamlico
Pn	B/D	Pantego
Ra	B/D	Rains
Rm	A	Rimini
Se	A/D	Seagate
Sb	*	Seagate-Urban Land Complex
St	C	Stallings
TM	*	Tidal Marsh
To	C	Torhunta
Ur	*	Urban Land
Wa	A	Wakulla
Wo	B/D	Woodington
Wr	C	Wrightsboro

* Requires field Judgment
A/D Refers to drained/undrained.

Sources: Urban Hydrology for Small Watersheds, USDA-SCS, 210-V1-TR-55, Second Ed., June 1986.

TABLE H-2
SCS Curve Numbers for Various Cover Conditions

Cover Description	Hydraulic Soil Group A	B	C	D	Percent Impervious
Fully Developed Urban Areas					
Open Space					
Poor Condition (<50% grass)	68	79	86	89	
Fair Condition (50-75% grass)	49	69	79	84	
Good Condition (>75% grass)	39	61	74	80	
Impervious areas					
Pavement, roofs	98	98	98	98	
Gravel	76	85	89	91	
Dirt	72	82	87	89	
Urban Districts					
Commercial and Business	89	92	94	95	85
Industrial	81	92	94	95	72
Residential areas (by lot size)					
1/8 acre (town houses)	77	85	90	92	65
1/4 acre	61	75	83	87	38
1/3 acre	57	72	81	86	30
1/2 acre	54	70	80	85	25
1 acre	51	68	79	84	20
2 acres	46	65	77	82	12
Agricultural areas					
Pasture, grassland					
Poor	68	79	86	89	
Fair	49	69	79	84	
Good	39	61	74	80	
Meadow (mowed)	30	58	71	78	
Brush					
Poor	48	67	77	83	
Fair	35	56	70	77	
Good	30	48	65	73	
Woods and Grass (Orchard)					
Poor	57	73	82	86	
Fair	43	65	76	82	
Good	32	58	72	79	
Woods					
Poor	45	66	77	83	
Fair	36	60	73	79	
Good	30	55	70	77	
Row Crops, straight, good	67	78	85	89	
Row Crops, contoured, good	65	75	82	86	
Small Grain, good	63	75	83	87	
Farmsteads	59	74	82	86	

Source:SCS TR-55 (SCS, 1986)

Determine the ultimate soil storage capacity, S:

$$S = \frac{1000}{CN} - 10$$

Determine run-off:

$$RUNOFF = \frac{(P - 0.2S)^2}{P + 0.8S}$$

in which P is the six hour, 10-year storm; use 4.8 inches for Wilmington

3. **<u>Set the shape of the hydrograph</u>**.
   The shape is determined by a pattern function that will preserve the estimated peak and estimated volume of run-off. The time to peak, Tp, is computed by the following expression:

$$Tp = \frac{43.5 * Area * Runoff}{Qp}$$

in which run-off is the SCS run-off depth in inches, area is the watershed area in acres, Qp is the estimated peak discharge in cfs, and Tp is the time to peak *in* minutes.

When the values of the peak, Qp, and the time to peak, Tp, have been set, the discharge at any time T may be determined by the pattern function (a step function):

For time T from zero to 1.25 *Tp:

$$Q = \frac{Qp}{2}\left[1 - \cos\frac{(\Pi t)}{TP}\right]$$

For times greater than 1 .25*Tp:

$$Q = 4.34Qp\exp\left[-1.3\left(\frac{t}{Tp}\right)\right]$$

in the step function, Q is the hydrograph discharge at the time of interest, t, in minutes. Qp is the estimated peak discharge in cfs, and Tp is the calculated time to peak in minutes. It is important to note that the argument of the cosine is in radians. If the calculations are carried out in a manual calculator, it shall be set to calculate in radians mode.

4. **<u>Estimating Required Storage:</u>**
   The required storage can be estimated using the following equation:

<u>S = (Qp - Qa) x Tp x1.39x60</u>

in which

S = Estimated storm water storage required (cu ft)
Qp=Estimated peak flow (cfs) (Post development flow rate)
Q_a = Allowable maximum outflow (cfs) (Pre-development flow rate)
Tp= Estimated time to peak (min)

On sites one acre or more, the system shall be routed to verify, sufficient storage is provided to meet the design criteria. Sites less than one acre are encouraged to be routed but will not be required.

b. <u>Stage-Storage Formulation</u>

The stage-storage function represents the most important aspects of the size and shape of the storage container. In the submission documents, it is presented as a graph of water surface elevation versus storage volume. Plotted values are normally computed from the topographic map of the detention pond. Areas of contours within the pond are measured. From these, the incremental volumes of water storage between the contours are computed, then accumulated to yield points of volume stored below each contour. Orderly supporting calculations shall be submitted with the stage-storage plot.

The stage-storage relation can be formulated as a graph or as a mathematical expression. The latter is more useful in this application because it includes both water volume information and surface area information as they relate to depth in a pond of complex shape. Stage is the depth of water relative to the bottom of the pond. Storage is the volume of storage at a given stage.

A stage-storage function may be formulated for a given basin as follows:

Compute a set of representative storage volumes at various stages by applying the average-end method of volume computation vertically to the set of known contours that express the basin topography. Arrange them as a list of stages, Z, and associated storages, S. If one plots the logarithms of storage versus the logarithms of stage, the resulting graph is usually remarkably a straight line, even the apparently complex topography of a natural draw or swale. This observation leads to the power-curve representation described below.

The expression for the stage-storage function is:

$$S = K_s Z^b$$

in which
Z = Stage (ft above the pond bottom)
S = Storage (Cu ft)
K_s and **b** are constants to be determined for the basin of interest.

There are two reasonable ways to determine K_s and b from the stage-storage list.
One is to use a linear regression routine applied to the logarithms of the data and back calculate the constants, K_s and b, from the regression results. The regression procedure is preferred because the shape information contained in a number of contours can be used to set the constants.

The other method is to obtain an approximation of the constants algebraically by using stage and storage values from two of the contours. It is usually best to select one point near the maximum expected water-surface elevation and the other at about mid-depth. The precision of the result can be tested and improved by trial and error.

Select two points on the stage-storage function as described above. Let the lower be point number one and the upper be point number two.

Estimate the exponent:

$$b = \frac{\ln\left[\frac{S_2}{S_1}\right]}{\ln\left[\frac{Z_2}{Z_1}\right]}$$

Estimate the coefficient:

$$Ks = \frac{S_2}{Z^b{}_2}$$

in which **Z** = Stage of the specified point (ft above the pond bottom)
S = Storage of the specified point (cu ft)
Ks and **b** are constants determined for the basin of interest.

Test the validity of the function by substitution of known values of storage to estimate the associated stages. If the stages agree acceptably with the actual stages (say within 0.1 ft or so), the expression is valid. For that check, the expression can be reformulated as

$$Z = \left[\frac{S}{Ks}\right]^{\frac{1}{b}}$$

in which the variables are the same as above.

Reference: (North Carolina Erosion and Sediment Control Planning and Design Manual, pp. 8.07.29 (rev 12/93), 8.07.30 (rev 12/93))

c. <u>Stage Discharge Function</u>

The stage-discharge function represents the most important aspects of the hydraulic behavior of the outlet system. Because there are many combinations of acceptable outlet devices, there can be no simple specification of permissible devices. The designer, having verified through analysis that the proposed outlet system is satis1~ctory, is expected to present the stage-discharge function as a graph of water-surface elevation versus outflow from the system. Detailed drawings of the outlet configuration and supporting hydraulic calculations shall be submitted with the stage-discharge plot.

Commonly, outlet devices are constructed as interactive systems of pipes and weirs. Pipes acting wider inlet control can be represented in calculations by the orifice equation, if the inlet is fully submerged, or by the charts published by the Federal Highway Administration (FHWA, 1985). Should the orifice equation be used, acceptable values of coefficient of discharge may be taken from Table H-3.

TABLE H-3
Values of Coefficient of Discharge (Cd)
For Pipes under Inlet Control

Reinforced Concrete	
Socket end flush with headwall	0.65
Socket end projecting from 611	0.64
Square edge in headwall	0.59
Corrugated metal pipe	
End Flush with headwall	0.59
End mitered to conform to slope	0.52
End projecting from fill	0.51

If the outlet of the pipe system can be submerged in the 10-year storm, the system shall be analyzed under outlet control, including routing, to confirm that operation is satisfactory. The FHWA outlet-control charts (FHWA, 1985) can be used as references in the analysis.

Spillway components used as webs can be analyzed as sharp-crested weirs, with weir coefficient 3.3, or broad-crested weirs, with weir coefficient 3.0, as appropriate. Other weirs may be used provided the designer justifies the analysis of behavior by authoritative reference.

Designers are encouraged to exercise innovative planning in detention pond design to produce facilities that are effective, attractive, and easily maintained. In the interest of efficiency in design and review, designers of unusual ponds are encouraged to confer with the City Engineer early in the design process for a preliminary reaction

d. Flood Routing

The hydrograph of the 10-year storm shall be routed through the detention pond to verify that the detention objective is met.

To execute this method, one first formulates the three sets of source data described above. Then two of the sets of source data, state-storage and stage-discharge, are combined to form a plot for function called the storage-indication curve. The storage indication curve is a plot of a certain expression, twice the storage divided by the time increment to which is added the outflow, versus the outflow. The time increment shall be selected prior to formulating the storage indication curve.

Routing of the flood proceeds by time steps. At each step in time through the passage of the inflow hydrograph through the reservoir, the outflow is computed. The result is a list of values of outflow at stated time, i.e. the outflow hydrograph.

Virtually all modern texts on the subjects of hydrology or water resources engineering include a treatment of the storage-indication method or one of its variations with an illustrative example.

Other routing methods, including commercially available software, may be acceptable provided they are recognizable by the City Engineer. The test of acceptability is verification by Chain Saw Routing.

The City's preferred method of routing is the Chain Saw Method as presented in "Elements of Urban Stormwater Design" by H. Rooney Malcom, P.E. Other methods of routing, such as the storage-indication method, are acceptable.

I. INFILTRATION SYSTEM

The City encourages the use of innovative techniques and designs which will help reduce the amount of storm water runoff getting into drainage ways and streams. These facilities shall be designed for the runoff produced from the 10-year storm and checked for the 50-year storm. Detailed drawings, substantiating data, calculations and specifications shall be submitted for designs of this nature. The use of infiltration systems has not been a frequent technique for control of storm water in the City. However, minimum standards have been established and are included in this design guide.

1. Definition

An infiltration system is defined as a storm water management facility that is designed to let storm water move or infiltrate into the soil. Types of systems shall include but not be limited to infiltration basins, swales, subsurface galleries and vegetative filters.

2. Vegetation

Refer to Section D.4.b for minimum vegetative requirements that may apply.

3. Subsurface Information

The minimum distance between the bottom of the infiltration system and the surface of the seasonal high ground water table shall be two feet. Soil types and infiltration rates shall be determined in order to size the infiltration area and assess the feasibility of this type of infiltration system. This information shall be submitted as part of the storm water permit application package.

4. Storage Capacity

The infiltration system shall be designed to provide storage equivalent to the runoff volume from the 10-year storm minus the volume infiltrated during the storm.

Infiltration systems may be used in combination with other systems which allow the pre-developed runoff rate to the leave the site.

5. **Overflow**
An emergency outlet or overflow device shall be designed such that in the event of a system failure (i.e. storm water will not infiltrate) during the 10-year storm, storm water will be conveyed to an existing drainage way or structure and not damage property. An emergency outlet or overflow device for the 50 year storm shall be provided (i.e. piped system, driveway, overland flow, etc.).

6. **Access**
Adequate access shall be provided for inspection and maintenance of the system in the form of cleanouts, grit chambers and inspection ports, etc.

7. **Materials**
The following list is the minimum requirements for materials used in infiltration systems.

Bedding Stone No. 57 Washed Stone or manufacturer recommended bedding material.

(Geotextile Fabric- This fabric should be used to wrap the sides, bottom and top of the stone that surrounds the infiltration structures in order to prevent intrusion by fines. The top should be overlapped a minimum of 12 inches. Material should be recommended by the manufacturer.

Infiltration Chambers Design should incorporate necessary loads that area of infiltration is expected to be subject to.

J. CONSTRUCTION STANDARDS

1. **Materials for Pipe Collection Svstem**
In general, when the pipe system is to be deeded to the City for maintenance and ownership, it shall be reinforced concrete pipe. Collection systems to remain privately owned may be corrugated metal, concrete, or other. The City realizes there may be situations where corrugated metal pipe is the better alternative due to height restrictions, etc., such as when arch or elliptical shapes are needed. When the developer prefers to pipe a ditch which requires larger than a 54-inch pipe,

corrugated metal pipe may be considered. The City Engineer shall review and approved these alternatives on a case-by-case basis.

Pipe for storm water collection systems shall meet the requirements set forth in the Materials section of Chapter II of these standards and the following minimum specifications:

a. Reinforced Concrete Pipe

Reinforced concrete pipe shall conform to ASTM C-76, Class III, latest revision. Joint material shall be Butyl Rubber CPS-210 as manufactured by Concrete Products Supply Company or equal.

b. Corrugated Metal Slorm Drain Pipe

Corrugated steel pipe/pipe arch shall be of an approved gauge and shall be frilly bituminous coated with a paved invert. For pipe sizes in excess of 60-inch corrugated steel, pipe/pipe arch shall be filly bituminous coated and one hundred (1000/a) percent paved and shall meet the applicable requirements of AASHTO
M-36.

c. Pipe in Detention/Retention Ponds

Pipe used for detention/retention pond outlet structures shall meet the minimum specifications above or shall be Polyvinyl chloride pipe or aluminum pipe meeting the following specifications:

1. PVC pipe shall be ASTM D-1785, Schedule 40 with solvent welded joints, push-gasket joints and PVC fittings.

2. Aluminum pipe shall conform to AASHTO M-196 and shall have a gauge thickness determined in accordance with appropriate design standards.

d. Perforated Pipe

Perforated metal pipe for use as sub-drain shall be 6-inch galvanized Helcore pipe or equal. PVC pipe shall be 6-inch ASTM D-1785, Schedule 40. Perforated corrugated polyethylene tubing for use as sub-drain shall be in conformance with ASTM F-405.

e. Alternative Pipe Materials

Other pipe materials may be considered on a case-by-case basis and shall be approved by the City Engineer before use.

f. Precast Concrete Manholes

Precast concrete manholes shall be minimum 4’- 0” inside diameter, and shall have a monolithic extended concrete base. Manhole shall have minimum 5-inch wall thickness and be constructed of four thousand (4,000) psi concrete. Manholes with diameters greater than 4’-0” are not required to have extended bases. All precast manholes must have 12” of stone bedding. Inverts shall be formed to provide a definite channel of flow through the structure.

g. Brick for Manholes and Catch Basins

Brick for manholes and catch basins shall be whole, solid, uniform concrete or clay brick with straight, even faces free of injurious defects.

h. Storm Drain Manhole Steps

Storm drain manhole steps shall be Dewey Bros. No. MH. ST. I8A, Neenah Foundry Co., No. R-1980-I, Vulcan Foundry No. 1999-6, or equal. Precast manholes shall have steps cast in walls during fabrication.

i. Gray Iron Castings

Gray iron castings used for manhole frames and covers and inlet frames, grates and covers shall conform to the requirements for Gray Iron Castings of the American Society of Testing Materials. The castings shall be true to pattern and free from cracks, gas holes, flaws and other defects. All surfaces shall be thoroughly coated with a spray asphalt coating with no asbestos material. If, during handling of castings, the coating is damaged, it shall be recoated to provide a complete coveting. Material shall be an asphaltic solution with no asbestos. Surface shall be smooth and free from runners, fins and other cast-on pieces. Castings shall be as specified on the applicable City Standard Details.

2. Installation

a. Bedding

Excavation for storm drainage pipe shall be to the lines and grades as shown on the plans. The bedding shall be shaped in accordance with a Class "C" bedding as shown on City Standard Detail SD 2-14. The bedding shall provide a firm foundation of uniform density along the entire length of pipe. Recesses shall be made to accommodate bells and joints. Where unstable soils are encountered, a minimum 6-inch thick bedding of stone shall be placed. The stone shall be uniformly graded from 3/4 inch to No. 4 in accordance with ASTM C-33. Care shall be taken to prevent undercutting in suitable soil. Areas undercut shall be filled with suitable soil and compacted to 95% of maximum density at optimum moisture content as determined by ASTM D 1557 Standard Test Method.

h. Laying and Joints

Storm drain pipe shall be laid to the line and grade as shown on the approved plans. Joints shall be as specified in the Materials Section and as recommended by the pipe manufacturer. Joints shall be sealed tightly to assure prevention of infiltration of groundwater, soil and other undesirable material.

c. Backfill

Backfill for storm drain pipe and appurtenances shall be free from all perishable and objectionable material including all rubbish, forms, blocks, etc. Backfill shall be placed around and above the pipe and solidly tamped to prevent movement of the pipe. Backfill shall then be placed and compacted to 95 percent as

determined by ASTM D 1557 Standard Test Method in layers not to exceed 12 inches.

d. <u>Manholes</u>

1. Brick manholes shall be constructed of good hard burned brick laid in with cement mortar. All brick, when set, shall be pushed to a firm seating in mortar and all joints well filled and spaded. All inlet and outlet pipes shall be placed prior to building the manhole walls and care shall be taken to ensure a tight joint around such pipe where it passes through the walls. Manholes shall be plastered with cement mortar on the outside to a thickness of three-quarters (3/4) of an inch. All manholes shall conform to the City Standard Detail SD-2.03.

2. Precast manholes shall be installed as per the manufacturer's recommendations. Manholes shall be set with 6-inch extended bases and a minimum 12-inch stone bedding. The tops shall be set to grade using a maximum of two 6-inch adjustment rings and casting. When pipe is laid into manholes, a watertight seal shall be provided at opening using concrete grout.

e. <u>Catch Basins</u>

Catch basins shall be constructed in accordance with City Standard Details D2.01 and 2.02. All catch basins shall be of the open throat type unless otherwise permitted. The base of the catch basins shall have a minimum thickness of six (6) inches of Class A concrete. All pipes shall be placed on the concrete base prior to beginning brick work. The brick work shall be brought up snugly around the pipes such that a tight connection is obtained.

f. <u>Precast Catch Basins</u>

Precast catch basins shall be installed per the manufacturer's recommendations. Precast catch basins shall be sized properly to receive City standard inlet castings. Field adjustments to accommodate the City's standard inlet casting will not be allowed. A 6-inch thick concrete base with 6-inch extended sides shall be constructed with a smooth, level surface. The precast basin shall be carefully placed on the clean surface at specified grades. Openings between wall and pipe shall be sealed with hydraulic cement to ensure a leak-free basin.

g. <u>Detention/Retention Outlet Systems</u>

Outlet structures for detention/retention facilities shall be provided with suitable foundation and support. Pipe systems shall be bedded as required or other suitable support provided. Outlet structures shall be properly anchored to prevent flotation.

K. MAINTENANCE

1. Responsibility

In order for the storm water management system to work properly at all times, it will be necessary to maintain all elements of the system. A system includes open channels, catch basins, pipes, ponds, outlet controls, etc. Especially important are vegetative lined systems and silt or debris retaining devices.

The City will not maintain privately owned detention/retention systems. Approval and designation of a system as private requires that the system be maintained by the owner so that the intended function of the system is unimpaired.

In order for the City of Wilmington to ensure an acceptable level of maintenance of the facilities, the following will be required to obtain approval.

a. Acceptable Entities

An acceptable entity shall be responsible for maintenance of the storm water management system. The City of Wilmington considers the following entities acceptable:

1. Governmental Units and Private Corporations
   If the entity is a governmental unit or private corporation, written proof shall be supplied in an appropriate form stating that the entity will operate and maintain the facilities.

2. Non-profit corporations including homeowners associations, property owners associations, condominium associations or associations of unit owners.

   The property owner or developer as applicant for site plan or subdivision plat approval is normally not acceptable as a responsible entity, especially when the property is to be sold to various third parties. However, the property owner may be acceptable if the property will be retained by the owner and will be rented, leased, or operated by the owner. The property owner shall supply evidence acceptable to the City Attorney that he will operate and maintain the facilities.

b. Powers

If a homeowners association, property owners association, or association of unit owners, is proposed for maintenance of the facilities, the applicant shall submit draft Articles of Incorporation, Declarations of Protective Covenants, Deed Restrictions, Declarations of Unit Ownership or By-laws.

1. The association shall have the general power to:

   (a) Own and convey property;
   (b) Operate and maintain common property;
   (c) Establish rules and regulations;
   (d) Assess members and enforce said assessments;
   (e) Sue and be sued;
   (t) Contract for services to provide operation and maintenance;
   (g) All lot owners, all home owners or unit owners shall be members of the Association; and
   (h) The Association shall exist in perpetuity

c. <u>Claims of Maintenance</u>

The Articles of Incorporation, Declaration of Protective Covenants, Deed Restrictions, Declaration of Unit Ownership or By-laws shall set forth the following:

1. That it is the responsibility of the Association to operate and maintain that portion of the storm water management system not maintained by the City. A description specifying the areas of responsibility shall be included. These areas also shall be indicated on the subdivision plat or on the site plan on non-subdivision projects.

2. A maintenance plan with schedules and work generally following the minimum guidelines provided in this section.

3. A statement that those areas to be maintained by the Association are owned by the Association or that they are common areas or common property.

4. The method of assessment and collection for operation and maintenance costs of the storm water management system.

5. The Declaration of Covenants be in effect for a minimum of 25 years with provision for renewal in accordance with law.

d. <u>Phasing Development</u>

If a property owner's association or association of unit owners is proposed for a development that will be constructed in phases or that will be added to in the future; the organization shall be created with the ability to accept future phases into the organization in order to ensure the continued operation and maintenance of the storm water management system for the development.

2. Operation and Maintenance for Storm water Detention/Retention Facilities

General

Storm water runoff is normally collected by a system of open channels and/or a piped collection system in the developed areas and by sheet flow and swales in the landscaped areas. In order for the system to operate in the correct manner periodic maintenance will be required.

Maintenance

As a minimum the following maintenance items shall be performed:

a. Detention Pond:

1. Grassing around any detention/retention facility shall be maintained to prevent the erosion of these areas. The areas shall be periodically mowed to maintain the aesthetic quality of the site and to prevent a reduction in capacity of the storm water system. Grass on slopes should not exceed a height of 15 inches.

2. Open ditches shall be kept free of undesirable growth and mowed or maintained to the design cross-section and area as shown on the Storm Water Management Plan approved by the City and on file in the office of the City Engineer. Growth on the slopes and bottom should not exceed a height of 8 inches.

3. Landscaping of the area around the detention/retention facility shall not reduce the capacity or binder operation and maintenance of the storm water system

4. The facility shall be routinely checked for and cleared of all accumulation of debris and the detention/retention facility outlet structure cleared of any blockage that is present

5. Storm drainage pipes and culverts shall be periodically inspected for debris and sand build-up. They shall be cleaned as necessary to provide for the free conveyance of storm water as designed.

6. The detention/retention facility shall be maintained at the design depth as shown on the Storm Water Management Plan approved by the City and on file in the office of the City Engineer. The pond shall be inspected on a regular basis but not less than every six months. Debris and sedimentation shall be removed if:

   (a) The primary outlet capacity is impaired and/or
   (b) The depth of the facility is more than one foot above the original facility depth or facility volume is reduced by 25% of the design impoundment volume.

7. Landscaping shall be maintained to ensure that landscape materials live and prosper.

b. <u>Oversized Pipe</u>:

1. The facility shall be routinely checked for and cleared of all accumulation of debris and the detention facility outlet structure cleared of any blockage.

2. Storm drainage pipes and structures shall be periodically inspected for debris and sediment build-up. They shall be cleaned as necessary to provide for the conveyance of storm water as designed.

3. The pipes installed to provide detention shall be kept free of sediment buildup. The detention facility shall be maintained in accordance with the Stormwater Management Plan approved by the City and on file in the office of the City Engineer. The pipe shall be inspected on a regular basis but not less than every six months. Debris and sedimentation shall be removed if

   (a) The storage volume is reduced by 25% or more, and/or;
   (b) The sediment and/or debris restricts the free flow of storm water.

c. <u>Infiltration System</u>:

1. The facility shall be routinely checked for and cleared of all accumulation of debris and the detention facility outlet structure cleared of any blockage.

2. Storm drainage pipes and structures shall be periodically inspected for debris and sediment build-up. They shall be cleaned as necessary to provide for the conveyance of storm water as designed.

3. The pipes and stone installed to provide infiltration shall be kept free of sediment build-up. The infiltration facility shall be maintained in accordance with the Stormwater Management Plan approved by the City and on file in the office of the City Engineer. The pipe shall be inspected on a regular basis but not less than every six months. Debris and sedimentation shall be removed if

   (a) The infiltration capacity is impaired and/or,
   (b) The sediment and/or debris restricts the free flow of storm water into the infiltration system and surrounding soils.

4. The infiltration system shall be removed and replaced with new material when the system no longer permits the storm water to freely infiltrate into the surrounding soils.

CHECKLIST FOR THE CITY OF WILMINGTON STORM WATER STANDARDS

APPLICATION REQUIREMENTS

_____Application Form
_____Application Fee
_____Storm water Management Plan
_____Plan
_____Title Block
_____Development Name
_____Owner
_____Design Firm
_____Authorized Reg. Prof.'s Seal, Signature & Date
_____Legend
_____North Arrow
_____Vicinity Map
_____Scale
_____Sheet Number
_____Date
_____Revision Numbers and Dates
_____Street Address of building(s) on site
_____Topographical Features
_____Original Contours at Dot more than 2-foot intervals
_____Existing Drainage Components (streams, ponds, watersheds, etc.)
_____Property Boundary Lines
_____Existing Streets, Buildings, Utilities. etc.
_____100 -year Flood Line and Floodway and Building Setbacks
_____Off-site Drainage Entering the Site (If so, make note on plans)
_____Where City/County Topographic Maps are used, Sufficient Checks provided
_____Soil Type
_____Wetlands
_____Wooded Area & Tree Groups
_____Site Plan
_____Existing & Proposed Structures, Roads, Buildings, Paved Areas, etc.
_____Ex. & Prop. Storm water Management System & Components include Pipe
_____Sizes, Lengths, Inverts and Slopes (Provide a table for proposed pipes)
_____Connection to Existing System
_____Swale Information include. Location, Size, Grade, Cross Section, etc.
_____Proposed Erosion Control Measures
_____Existing and Proposed Contours
_____Typical Street Cross Section
_____Typical Driveway Detail
_____Typical Construction Entrance Detail
_____Total Impervious Area in Square Feet (Existing & Planned)
_____Soil Types
_____Work Limits & Areas to Remain Undisturbed include. Noting Square Footage to be disturbed
_____Wetlands
_____Wooded Areas and Tree Groups
_____Finish Floor Elevations
_____Provide copy of Drainage Plan with different drainage areas distinguishable from each other (for each Catch Basin or Inlet, Delineate its watershed) (can be a red line)

____Certifications
_____Designers
_____Owners

___Design Calculations
____Piped Systems
_____Design for 10-yr Storm
_____Analyze for 50-yr Storm
_____Pipe Required for Streams, Ditches, Channels, etc. if Pipe Size is 48” or less
_____Minimum Velocity for Pipe Segments is 2.5 FPS
_____Minimum Cover for Pipe is 2 ft. Measured from TOP of Pipe to Bottom of Base Course
_____Maximum Manhole spacing is 400 Ft. for all Pipes less than 60 inches
_____Headwalls or Flared End Sections Required at all Inlets and Exists of Piped Systems
_____ Energy Dissipaters Designed for 10-yr Storm
_____ Provide Detail of Standard Catch Basin, Drop Inlet, and Manhole (Check cover requirements depending on Pipe Size)
_____For Piped Systems where Tailwater Conditions exist, Calculations should be provided

____Open Channels
_____ Design for 10-yr Storm
_____ Analyze for 50-yr Storm
_____Permitted ONLY where Pipe Sizes Exceed 48 inches
_____ Side Slopes where Mowing is required shall be 3 to 1 or flatter
_____Minimum Bottom Width shall be 3 feet
_____Alternate Linings MAY be Permitted, Submittals Required
_____Easements Required for Public Dedication
_____ Check Velocity for Proposed Lining
_____Temporary Required if Velocity exceeds 2 fps for Vegetative Channels

_____ Detention & Wet Retention Facilities
_____Strong Effort to Make the Facility an Amenity to the Project
_____ Design for 10-yr Storm
_____ Analyze for 50-yr Storm
_____Watershed is 1 Acre or more
_____Plan showing entire Watershed with Sufficient Detail to Confirm Limits
_____Detailed Calculations for Pre-development & Post-development discharges
_____Detail Calculations of Stage-storage, include. Graph or Table
_____Detail Calculations of State-discharge, include graph or table
_____Detail Computations of Routing Showing at least Time, Storage, Stage, Discharge
_____Emergency Spillway Calculations & Design Date for the 50-yr Storm
_____Energy Dissipaters Design Data and Calcs. for 10-yr Storms
_____Watershed is less than 1 Acre
_____ Plan showing entire Watershed with sufficient Detail to confirm Limits
_____ Detailed Calculations for Pre-development & Post-development Discharges

_____Calculations of Available Storage & Outlet Structure Hydraulics
necessary to show that Post-development Runoff will not exceed
Pre-development Discharge
_____Emergency Spillway Calculations & Design Date for the 50-yr Storm
_____Energy Dissipaters Design Data and Cab for 10-yr Storms

_____Slopes for Vegetative Banks shall be 3 to 1 or Flatter
_____Vegetative Cover Type shall be Noted and Approved by Parks
_____Riser (if used)
_____Riser shall be minimum of 8”
_____Pipe shall be minimum of 6”
_____Trash Rack required

_____Other Utilities shall be a Minimum of 5 ft. from Basin
_____Landscaping Zone
_____Less than or Equal to 0.5 acres = 5 ft. Minimum Zone
_____Greater than 0.5 acres = 10 ft. Minimum Zone
_____Must be Approved by Pasts

_____Access Zone Minimum Zone of 10 feet, Cannot be Landscaping Zone
_____Fencing: not Required. Optional for Private Facilities
_____Must meet NCDEHNR Requirements if Applicable

_____Infiltration Systems
_____Plan showing entire Watershed & how Offsite Drainage swill be handled

_____Detailed Calculations of Pre-development & Post-development Runoff for 10-yr Storm
_____Certified Engineer’s Report on Soils & the Permeability Rate of the Soils
_____Calculations for Sizing the Infiltration System and Required Storage
_____Analyze the 50-yr Storm
_____Provide an Emergency Spillway (Outlet) for the SO-yr Storm
_____Soil Types & Ground Water Level

_____ALL Required Easements with Recording Fees
_____Storm water Management Maintenance Agreement with Recording Fee Current Tide Opinion
_____Subordination Agreement
_____Copies of Plans & Calculations as Needed

STORM WATER MANAGEMENT

STANDARD DETAILS

CHARTS & TABLES

TABLE OF CONTENTS

DETAIL DESCRIPTION	SD	PAGE
STANDARD UTILITY LOCATION	15-05	5-72
STORM DRAIN MANHOLE	2-03	5-73
PRECAST MANHOLE	14-11	5-74
PRECAST MANHOLE RING EXTENSION	14-12	5-75
INTERFERENCE STORM DRAIN MANHOLE	2-05	5-76
MANHOLE RING AND COVER - DEWEY BROS	14-01	5-77
MANHOLE RING AND COVER - G.R ENNIS & SON	14-02	5-78
CATCH BASIN CASTINGS	2-16	5-79
GRILL CATCH BASIN CASTINGS	14-04	5-80
CATCH BASIN CASTING FOR 30” HOOD AND GRATE	2-19	5-81
CATCH BASIN GRATE FOR 30” HOOD AND GRATE	2-20	5-82
MANHOLE STEP	14-10	5-83
CATCH BASIN	2-01	5-84
GRILL CATCH BASIN	2-02	5-85
TROUGH TYPE DROP INLET BASIN	2-06	5-86
SLAB TOP FOR MODIFIED CATCH BASIN	2-11	5-87
MODIFIED CATCH BASIN - SIDEWALK AND CURBING	2-12	5-88
CORRUGATED STEEL PIPE REQUIREMENTS	2-13	5-89
DROP INLET PROTECTION	2-14	5-90
PIPE OUTLET PROTECTION	2-15	5-91
BEDDING DETAILS - CLASSES B AND C	2-17	5-92
METAL TO CONCRETE PIPE CONNECTION	2-18	5-93
MODIFIED CATCH BASIN - GREATER THAN 24-INCH INLETS OR OUTLETS	2-10	5-94
HEADWALL - SAND CEMENT BAG	2-09	5-95
DRY WELL	2-08	5-96
SUB-DRAIN DETAIL	2-04	5-97
PAVEMENT REPAIRS AT PIPE INSTALLATIONS	1-05	5-98
PIPE TRENCH DETAIL	1-07	5-99
SAND AND GREASE INTERCEPTOR BOX	15-06	5-100
TEMPORARY SILT FENCE DETAIL	13-01	5-101
CATCH BASIN CASTING FOR 30” HOOD AND GRATE	2-19	5-102
CATCH BASIN GRATE FOR 30” HOOD AND GRATE	2-20	5-103
CATCH BASIN CASTING FOR 24” HOOD AND GRATE	2-21	5-104
PRECAST WAFFLE DRAINAGE STRUCTURE	2-23	5-105
PRECAST WAFFLE DRAINAGE STRUCTURE GENERAL NOTES	2-23A	5-106
PRECAST DRAINAGE STRUCTURE – SOLID WALL	2-24	5-107
PRECAST DRAINAGE STRUCTURE GENERAL NOTES	2-24A	5-108

CHARTS DESCRIPTION	CHART	PAGE
RUNOFF COEFFICIENTS FOR VARIOUS LAND USES	E-1	5-10
TIME OF CONCENTRATION (KIRPICH'S NOMOGRAPH)	E-2	5-12
MANNING'S ROUGHNESS COEFFICIENTS FOR SHEET FLOW	E-3	5-13
AVERAGE VELOCITIES FOR SHALLOW CONCENTRATED FLOW	E-4	5-15
INTENSITY-DURATION-FREQUENCY TABLE	E-5	5-16
INTENSITY-DURATION-FREQUENCY TABLE	E-6	5-16
FLOW IN TRIANGULAR GUTTER SECTIONS	F-1	5-23
LENGTH OF CATCH BASIN OPENING	F-2	5-24
EFFICIENCY OF CURB INLET	F-3	5-25
CATCH BASIN DESIGN DATA SHEET	F-4	5-26
STORM DRAINAGE DESIGN DATA SHEET	F-5	5-27
ENTRANCE LOSS COEFFICIENTS		5-21
CULVERT HEAD WATER DEPTH NOMOGRAPHS	F-6	5-28
	F-10	5-32
CULVERT HEAD NOMOGRAPHS	F-1l	5-33
	F-15	5-37
ESTIMATION OF STONE SIZE AND DIMENSIONS FOR CULVERT APRONS	F-16	5-38
DETERMINATION OF STONE SIZES FOR DUMPED STONE CHANNEL LININGS AND REVETMENTS	F-17	5-39
MAX. STONE SIZE FOR REPRAP AND GRADATION OF RIPRAP	F-18	5-40
MANNING'S N RELATED TO VELOCITY, HYDRAULIC RADIUS AND VEGETAL RETARDANCE		5-42
NOMOGRAPH OF MANNING'S EQUATION FOR TRAPEZOIDAL CHANNELS	G-1	5-43
CHANNEL GEOMETRIES FOR V-SHAPED, PARABOLIC AND TRAPEZOIDAL CHANNELS	G-2	5-44
MAXIMUM ALLOWABLE DESIGN VELOCITIES FOR VEGETATED CHANNELS	G-3	5-45
RETARDANCE CLASSIFICATION FOR VEGETAL COVERS	G-4	5-46
MANNING'S ROUGHNESS COEFFICIENT	G-5	5-47
PERMISSIBLE SHEAR STRESSES FOR RIPRAP AND TEMPORARY LINERS	G-6	5-48
VALUES OF "n" IN MANNING FORMULA	G-7	5-49
HYDROLOGIC SOIL GROUPS FOR LOCAL SOIL TYPES	H-1	5-52
SCS CURVE NUMBERS FOR VARIOUS COVER CONDITIONS	H-2	5-53
VALUES OF COEFFICIENT OF DISCHARGE FOR PIPES UNDER INLET CONTROL	H-3	5-57

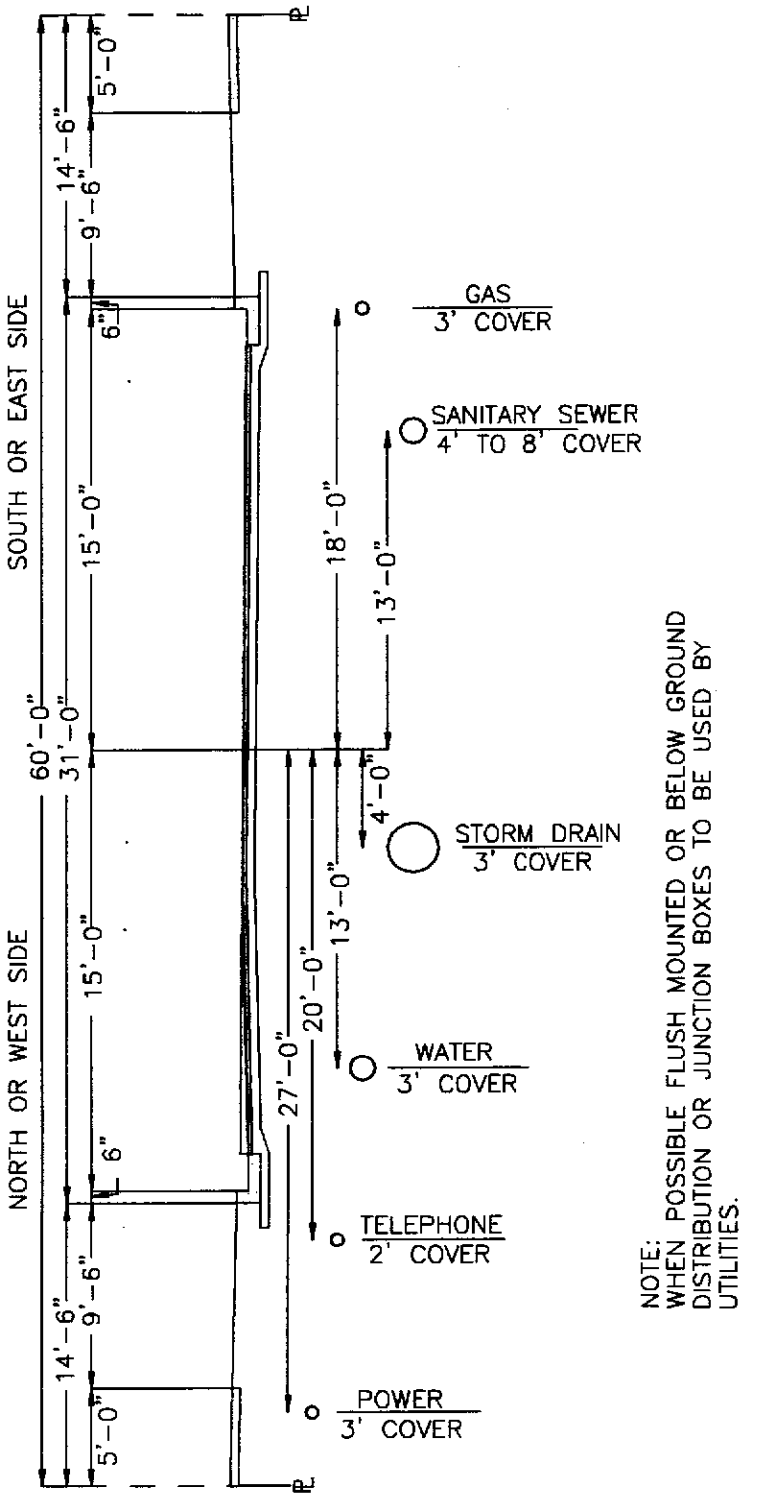

NOTE:
WHEN POSSIBLE FLUSH MOUNTED OR BELOW GROUND DISTRIBUTION OR JUNCTION BOXES TO BE USED BY UTILITIES.

STANDARD UTILITY LOCATION
SD 15-05

STANDARD DETAIL

DATE:	2001
DRAWN BY	JSR/CMR
CHECKED BY	B.P., P.E.
SCALE	NOT TO SCALE

STANDARD UTILITY LOCATION

CITY OF WILMINGTON
ENGINEERING OFFICE
305 CHESTNUT STREET
PO. BOX 1810
WILMINGTON N.C. 28402
(910) 341-7807

SD 15-05

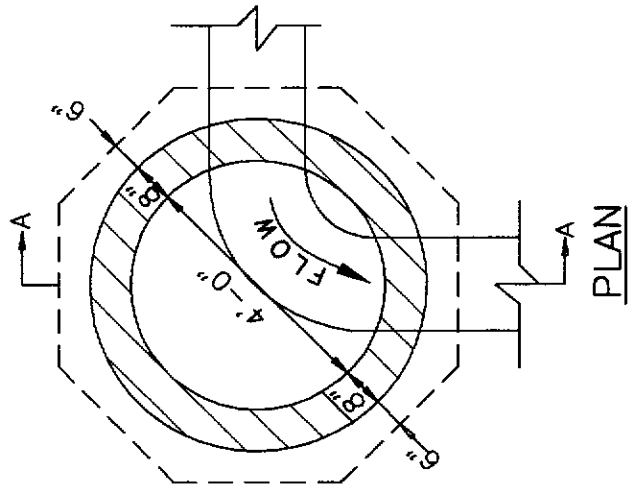

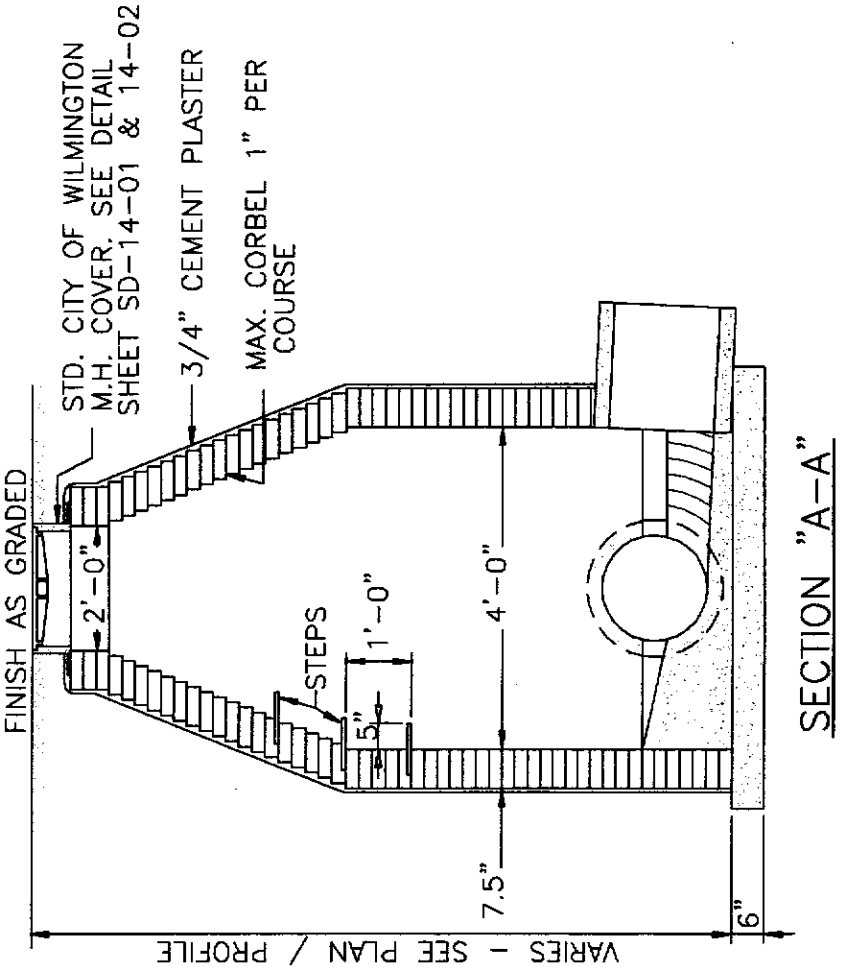

GUIDELINES FOR STORM DRAIN MANHOLE

SD 2 -03

	STANDARD DETAIL	CITY OF WILMINGTON ENGINEERING OFFICE 305 CHESTNUT STREET PO. BOX 1810 WILMINGTON N.C. 28402 (910) 341-7807
DATE: 2001	GUIDELINES FOR STORM DRAIN MANHOLE	
DRAWN BY JSR/CMR		
CHECKED BY B.P., P.E.		
SCALE NOT TO SCALE		SD 2-03

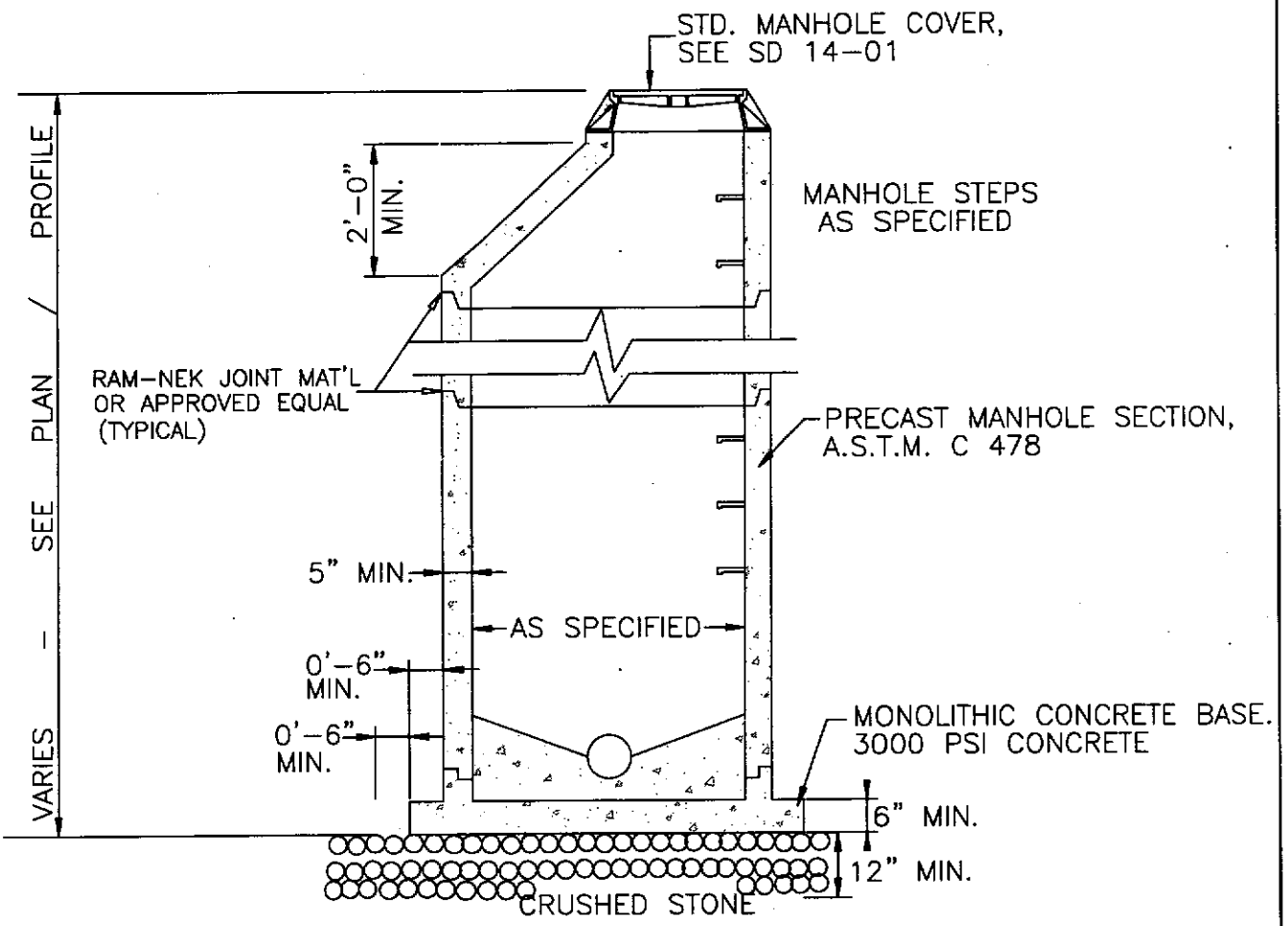

NOTE:
EXTENDED BASE MAY NOT BE REQUIRED WHERE MANHOLES ARE GREATER THAN 4 FEET INSIDE DIAMETER

PRECAST MANHOLE
SD 14-11

	STANDARD DETAIL	CITY OF WILMINGTON ENGINEERING OFFICE 305 CHESTNUT STREET PO. BOX 1810 WILMINGTON N.C. 28402 (910) 341-7807
DATE: 2001	PRECAST MANHOLE	
DRAWN BY JSR/CMR		
CHECKED BY B.P., P.E.		
SCALE NOT TO SCALE		SD 14-11

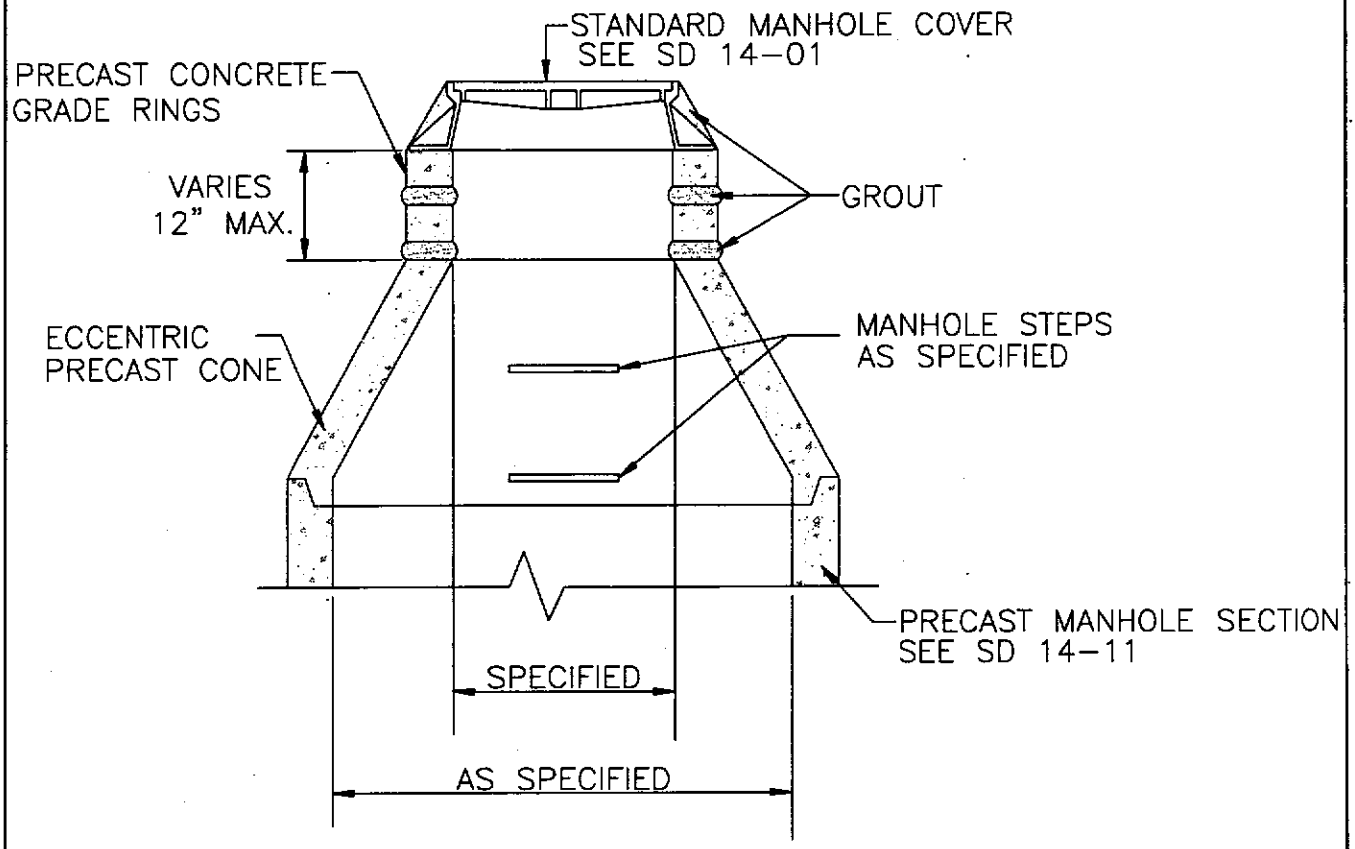

PRECAST MANHOLE
RING EXTENSION
SD 14-12

	STANDARD DETAIL	CITY OF WILMINGTON ENGINEERING OFFICE 305 CHESTNUT STREET PO. BOX 1810 WILMINGTON N.C. 28402 (910) 341-7807
DATE: 2001	PRECAST MANHOLE RING EXTENSION	
DRAWN BY JSR/CMR		
CHECKED BY B.P., P.E.		
SCALE NOT TO SCALE		SD 14-12

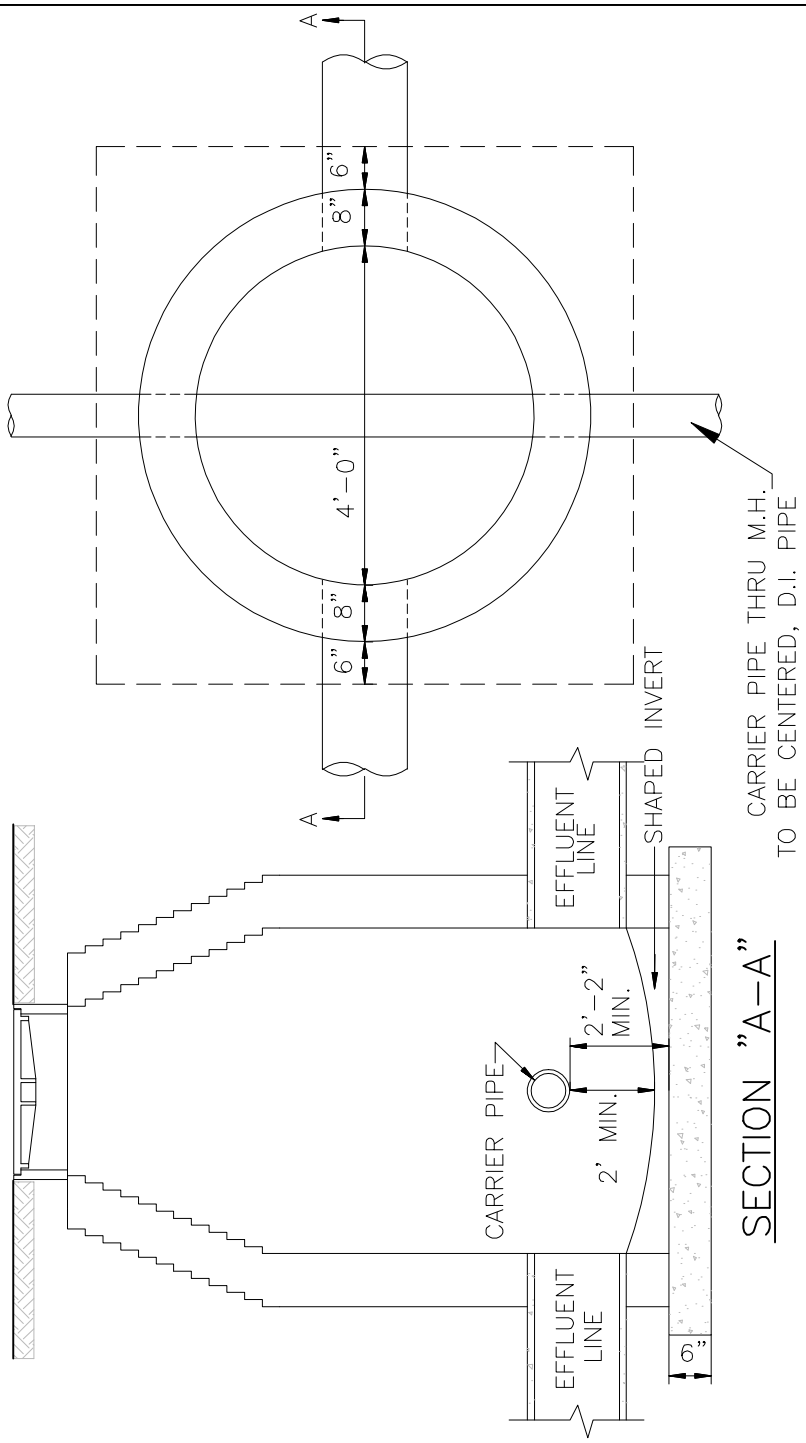

INTERFERENCE STORM DRAIN MANHOLE

SD 2-05

	STANDARD DETAIL	
DATE: NOVEMBER, 2008	INTERFERENCE STORM DRAIN MAN HOLE	CITY OF WILMINGTON NORTH CAROLINA
DRAWN BY JSR/CMR		CITY OF WILMINGTON ENGINEERING OFFICE 305 CHESTNUT STREET WILMINGTON N.C. 28401 (910) 341-7807
CHECKED BY B.P., P.E.		
SCALE NOT TO SCALE		SD 2-05

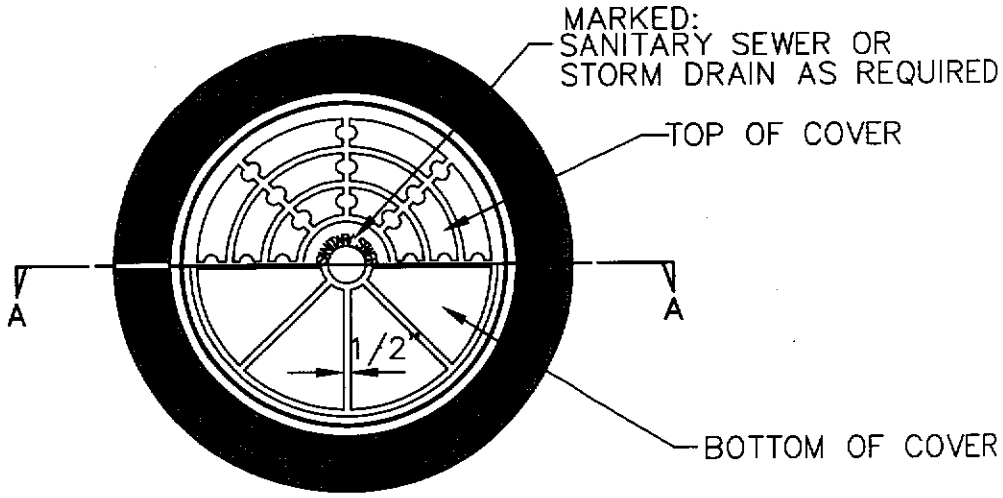

PLAN

NOTE:
RING & COVER CONTACT SURFACES SHALL BE MACHINED SO AS TO INSURE EVEN BEARING OF COVER ON RING

MINIMUM WEIGHTS:
RING 190 LBS.
COVER 120 LBS.

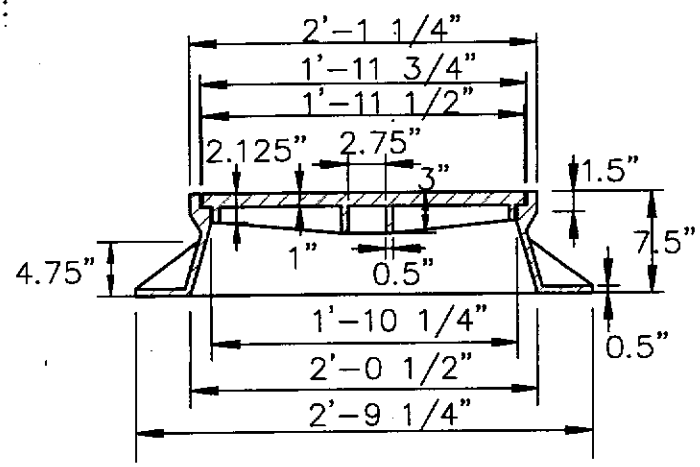

SECTION "A-A"

STANDARD MANHOLE RING AND COVER

SD 14-01

	STANDARD DETAIL	CITY OF WILMINGTON ENGINEERING OFFICE 305 CHESTNUT STREET PO. BOX 1810 WILMINGTON N.C. 28402 (910) 341-7807
DATE: 2001	STANDARD MANHOLE RING AND COVER	SD 14-01
DRAWN BY JSR/CMR		
CHECKED BY B.P., P.E.		
SCALE NOT TO SCALE		

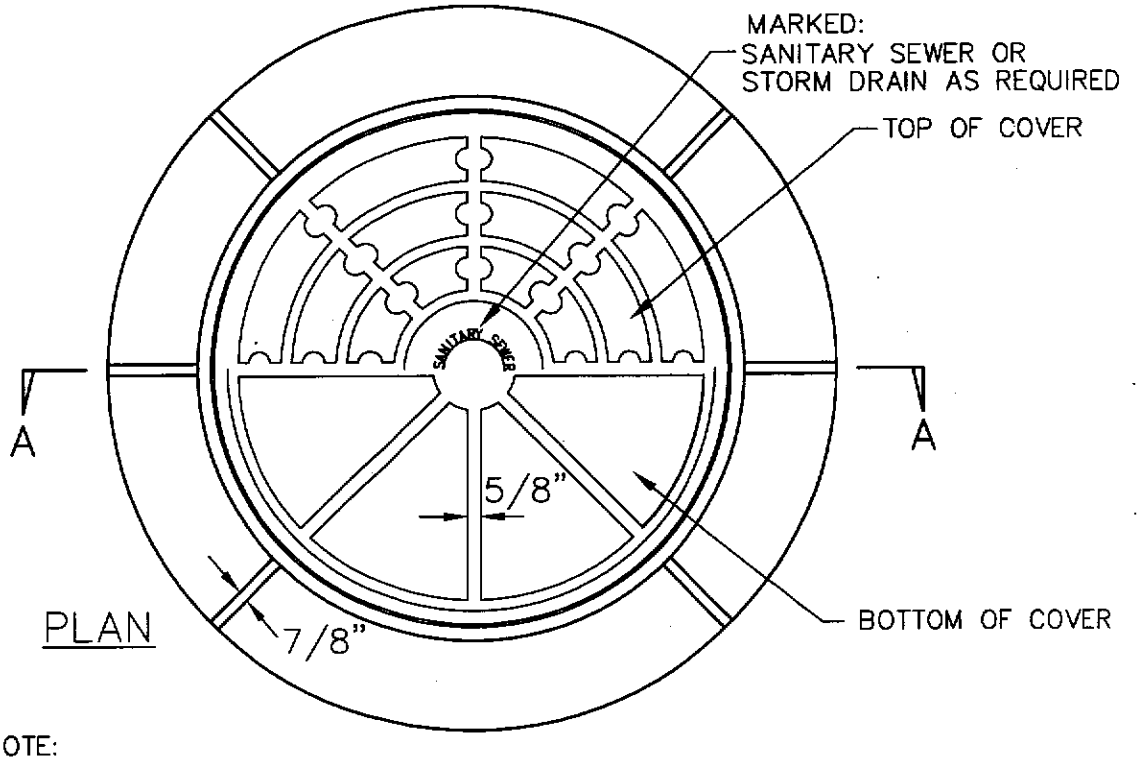

PLAN

NOTE:
RING & COVER CONTACT SURFACES SHALL BE MACHINED TO INSURE EVEN BEARING OF COVER AND RING

MINIMUM WEIGHTS:
RING 261 LBS.
COVER 120 LBS.

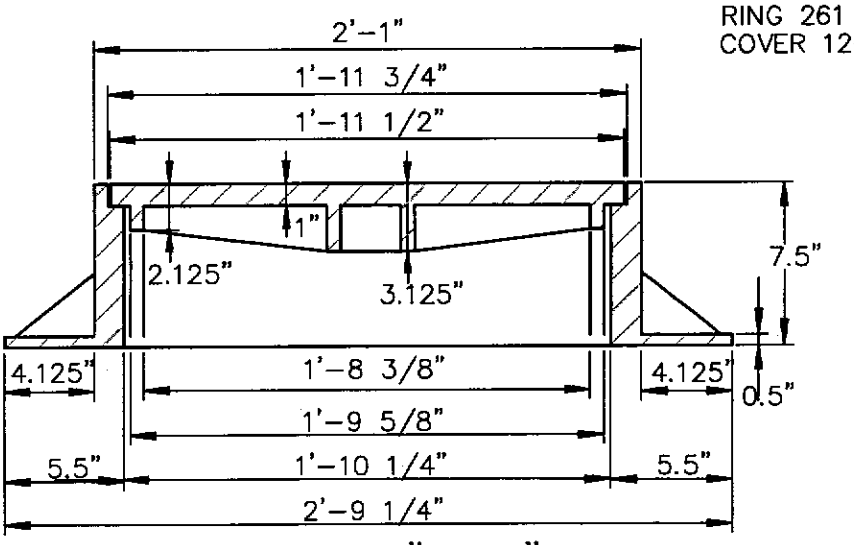

SECTION "A-A"

STANDARD MANHOLE RING & COVER

SD 14-02

	STANDARD DETAIL	CITY OF WILMINGTON ENGINEERING OFFICE 305 CHESTNUT STREET PO. BOX 1810 WILMINGTON N.C. 28402 (910) 341-7807
DATE: 2001	STANDARD MAN-HOLE RING AND COVER	
DRAWN BY JSR/CMR		
CHECKED BY B.P., P.E.		
SCALE NOT TO SCALE		SD 14-02

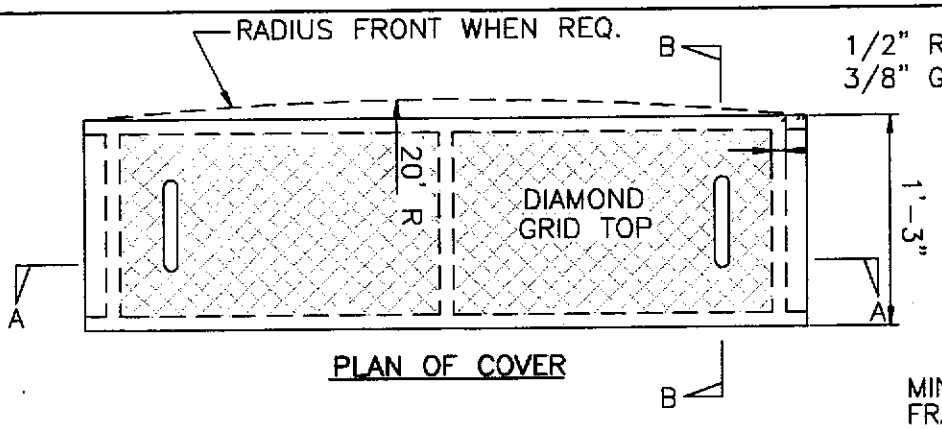

PLAN OF COVER

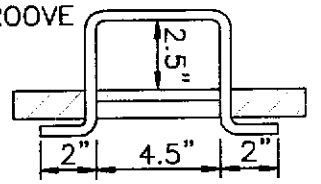

DETAIL OF HANDLE

MINIMUM AVERAGE WEIGHT
FRAME (EACH) 65LBS.
COVER (RADIUS) 225 LBS.
COVER (STR.) 225 LBS.

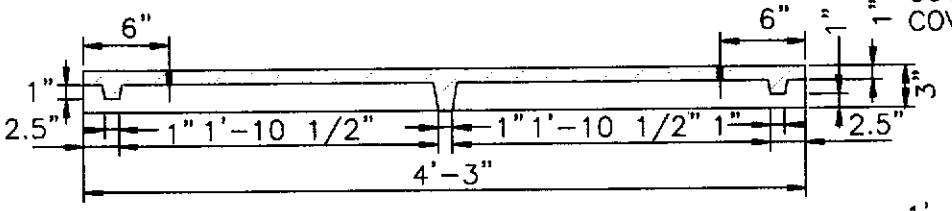

SECTION "A-A"

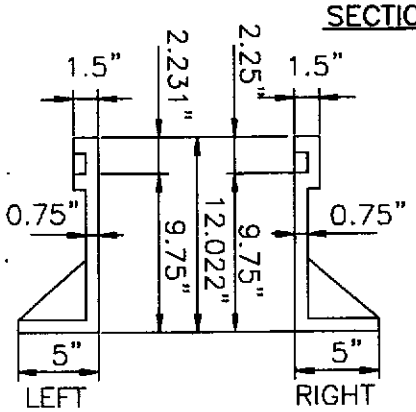

ENDS

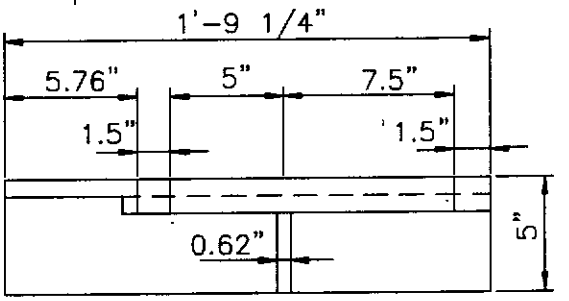

TOP VIEW

3/4" HOLES

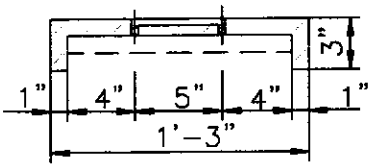

SECTION "B-B"

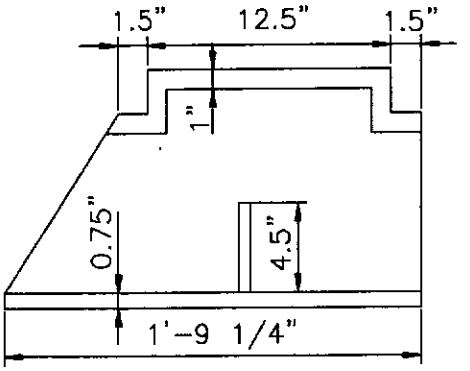

SIDE

CATCH BASIN CASTINGS
SD 2-16

	STANDARD DETAIL	CITY OF WILMINGTON ENGINEERING OFFICE 305 CHESTNUT STREET PO. BOX 1810 WILMINGTON N.C. 28402 (910) 341-7807
DATE: 2001	CATCH BASIN CASTINGS DETAIL	
DRAWN BY JSR/CMR		
CHECKED BY B.P., P.E.		
SCALE NOT TO SCALE		SD 2-16

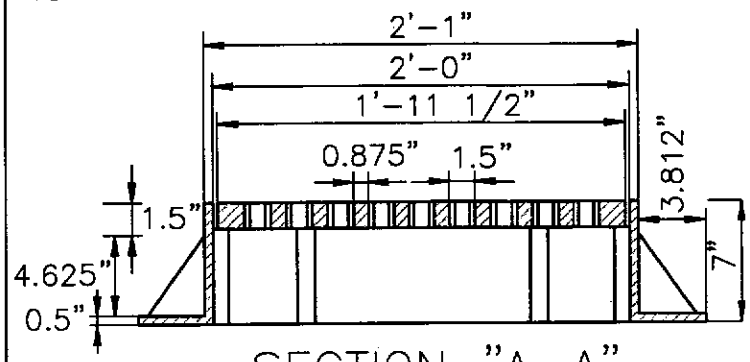

SECTION "A-A"

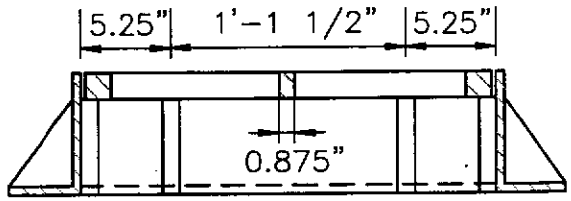

SECTION "B-B"

MINIMUM AVERAGE WEIGHT
FRAME 195 LBS.
GRATE 145 LBS.

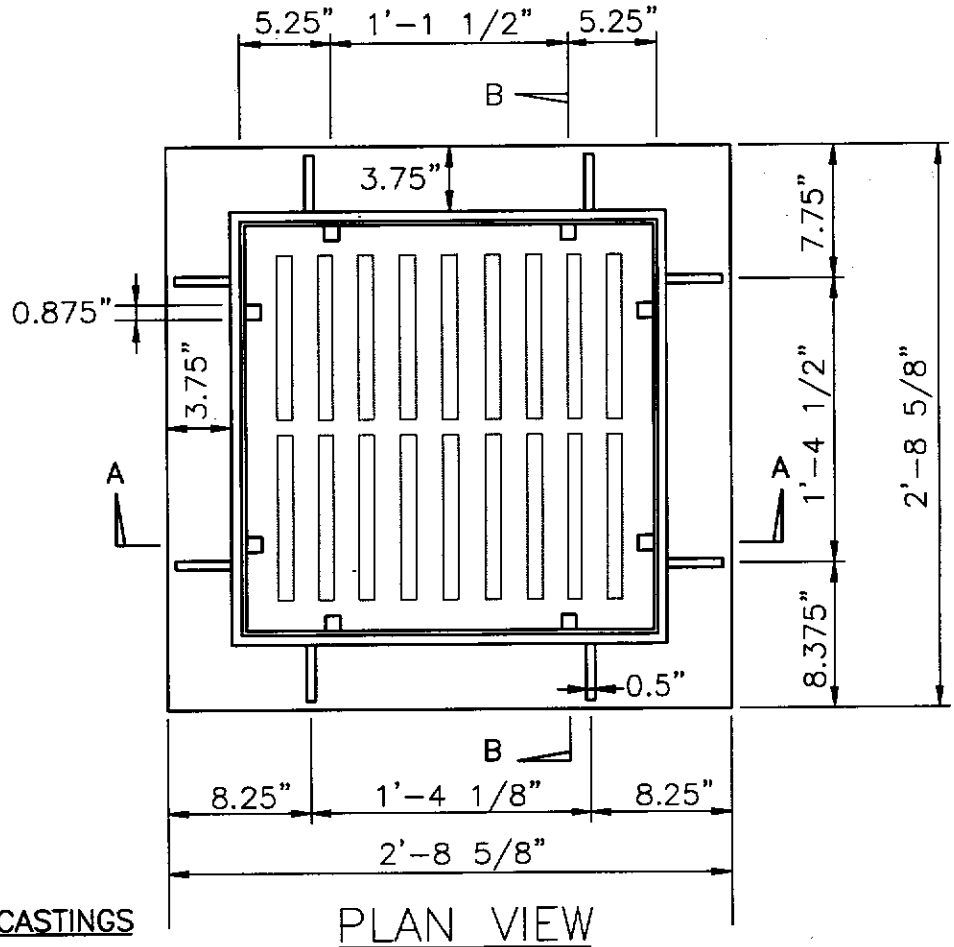

PLAN VIEW

GRILL BASIN CASTINGS
SD 14-04

	STANDARD DETAIL	CITY OF WILMINGTON ENGINEERING OFFICE 305 CHESTNUT STREET PO. BOX 1810 WILMINGTON N.C. 28402 (910) 341-7807
DATE: 2001	GRILL BASIN CASTINGS	
DRAWN BY JSR/CMR		
CHECKED BY B.P., P.E.		
SCALE NOT TO SCALE		SD 14-04

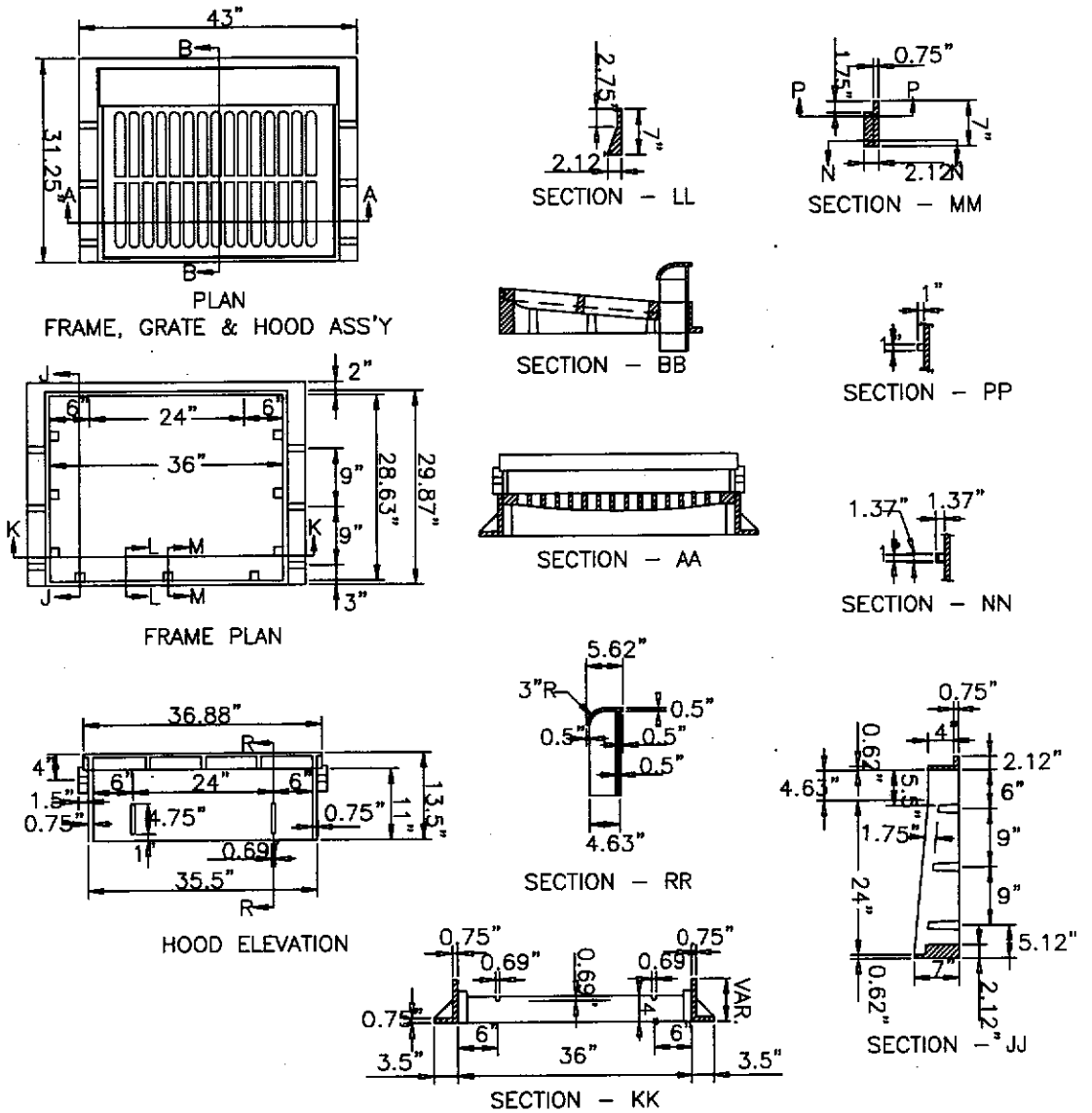

NOTES: 1) USE TYPE "E","F",& "G" GRATE UNLESS OTHERWISE INDICATED

2) TOP OF HOOD CASTING SHALL HAVE REAISED LETTERS WHICH SAY: "KEEP STORM DRAIN CLEAN! DRAINS TO CREEK" PROVIDE PICTURE OF FISH BETWEEN TWO STATEMENTS.

CATCH BASIN CASTING FOR 30" HOOD AND GRATE

SD 2–19

	STANDARD DETAIL	CITY OF WILMINGTON ENGINEERING OFFICE 305 CHESTNUT STREET PO. BOX 1810 WILMINGTON N.C. 28402 (910) 341–7807
DATE: 2001	CATCH BASIN CASTING FOR 30" HOOD AND GRATE	
DRAWN BY JSR/CMR		
CHECKED BY B.P., P.E.		
SCALE NOT TO SCALE		SD 2-19

DETAIL SHOWING TYPES OF GRATES TO BE USED ACCORDING TO WATER FLOW.

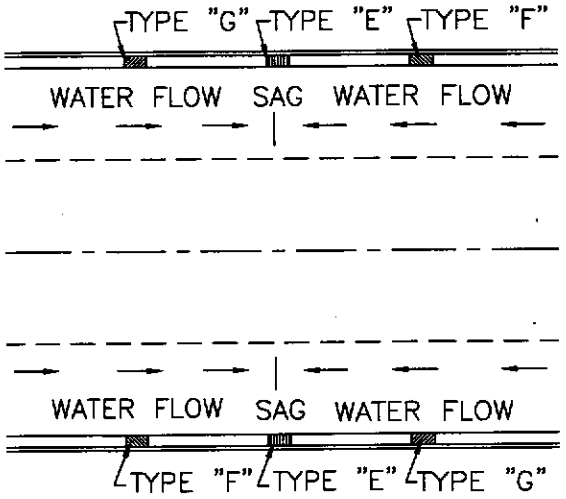

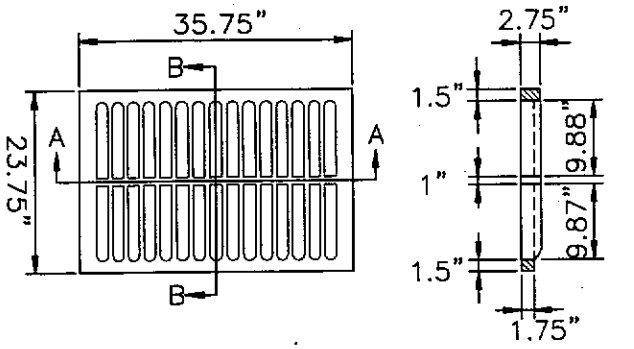

SECTION – BB

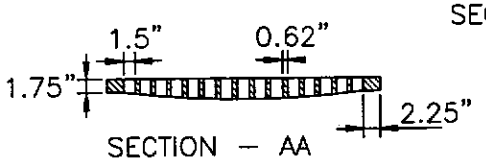

SECTION – AA

TYPE – E

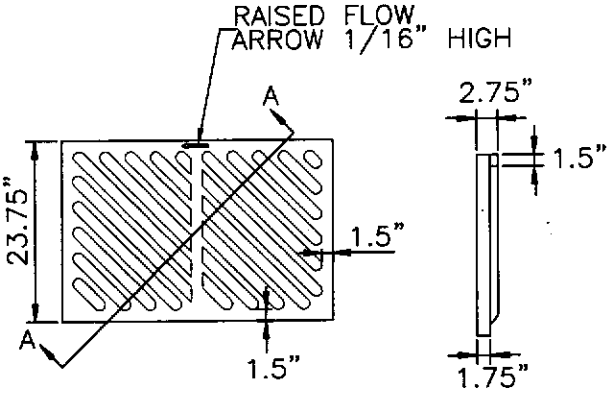

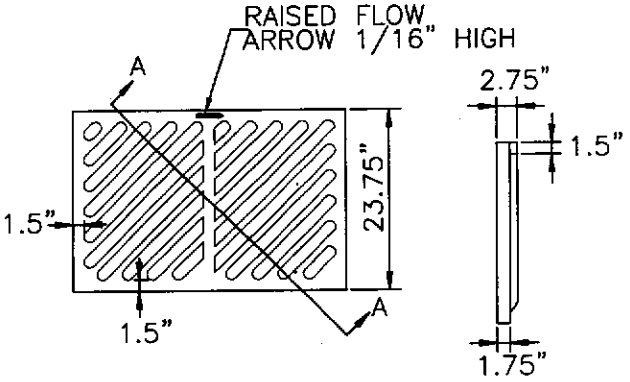

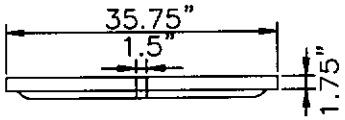

TYPE – F

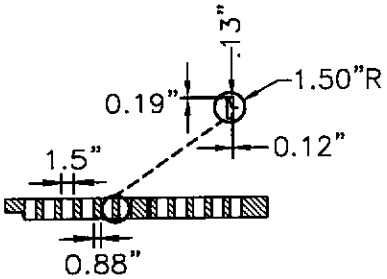

SECTION – AA

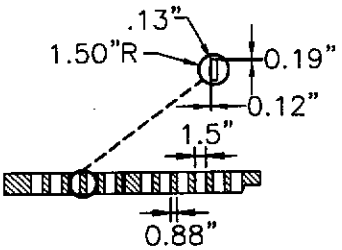

SECTION – AA

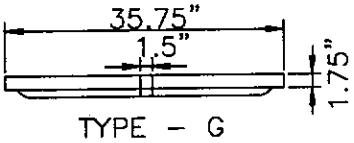

TYPE – G

CATCH BASIN GRATE FOR 30" HOOD AND GRATE

SD 2–20

	STANDARD DETAIL	CITY OF WILMINGTON ENGINEERING OFFICE 305 CHESTNUT STREET PO. BOX 1810 WILMINGTON N.C. 28402 (910) 341–7807
DATE: 2003	CATCH BASIN GRATE FOR 30" HOOD AND GRATE	
DRAWN BY JSR/CMR		
CHECKED BY B.P., P.E.		
SCALE NOT TO SCALE		SD 2-20

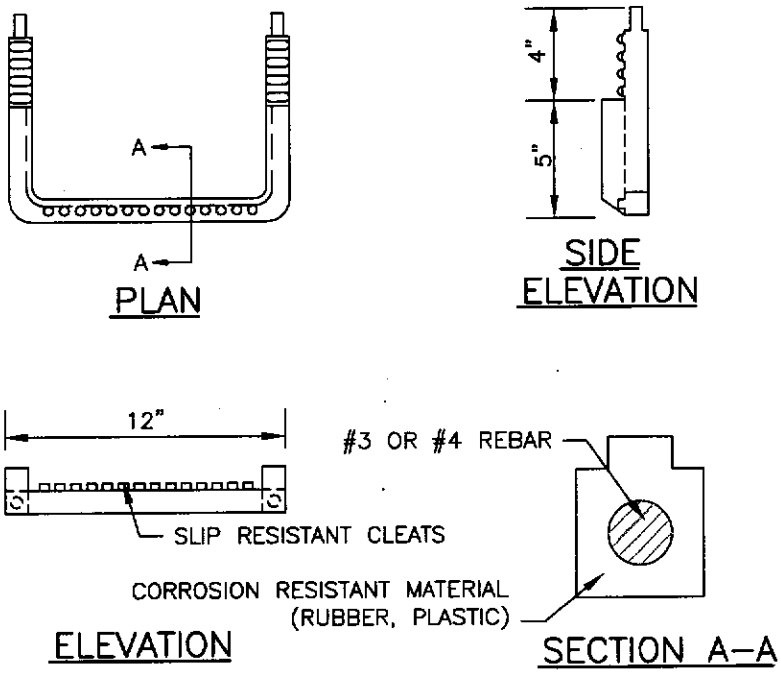

STANDARD SLIP RESISTANT MANHOLE STEP
SD 14–10

	STANDARD DETAIL	CITY OF WILMINGTON ENGINEERING OFFICE 305 CHESTNUT STREET PO. BOX 1810 WILMINGTON N.C. 28402 (910) 341–7807
DATE: 2001	SLIP RESISTANT MANHOLE STEP	
DRAWN BY JSR/CMR		
CHECKED BY B.P., P.E.		
SCALE NOT TO SCALE		SD 14-10

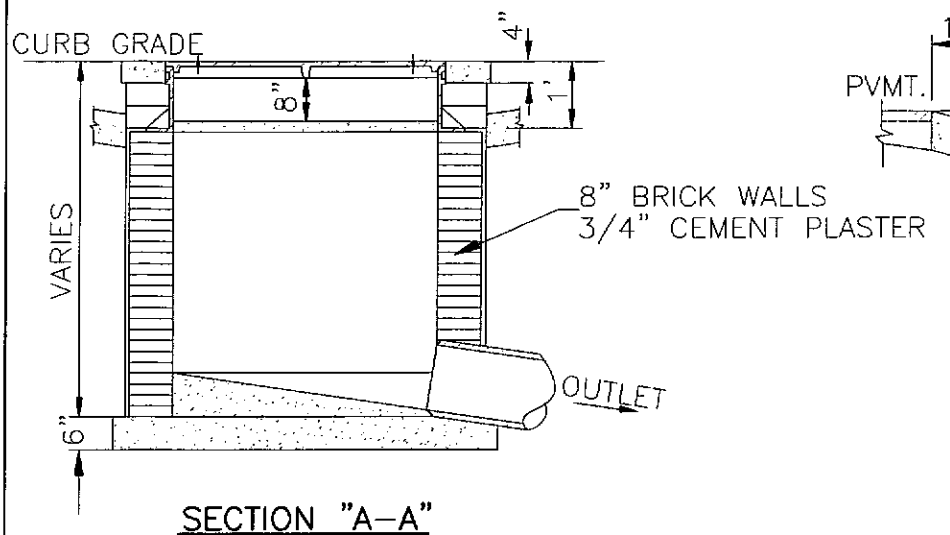

SECTION "A–A"

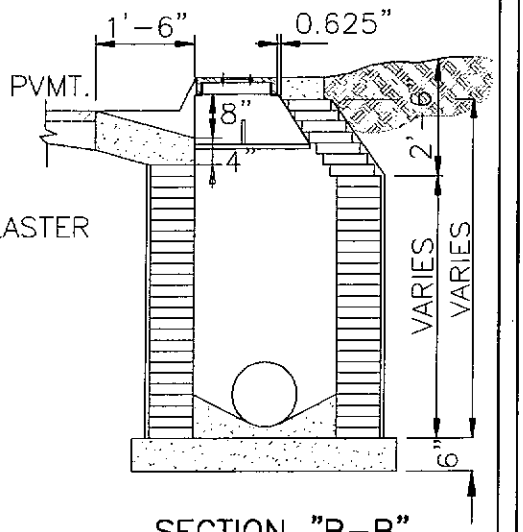

SECTION "B–B"

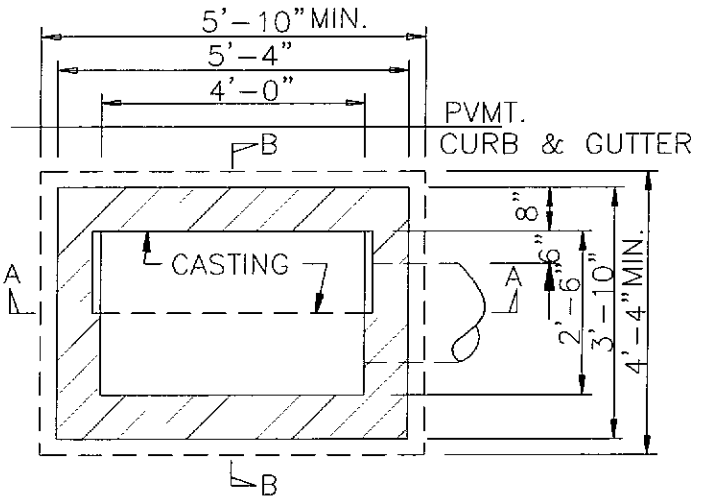

PLAN

NOTE:

1. 4" DEEP X 8" WIDE CONCRETE COPING ALL AROUND BASIN CASTING.
2. ALL CONCRETE TO BE CLASS "A"
3. FOR CASTING DETAIL SEE SD 2–16

CATCH BASIN

SD 2–01

NOT TO SCALE

	STANDARD DETAIL	CITY OF WILMINGTON ENGINEERING OFFICE 305 CHESTNUT STREET PO. BOX 1810 WILMINGTON N.C. 28402 (910) 341–7807
DATE: 2006	**CATCH BASIN**	
DRAWN BY JSR/CMR		
CHECKED BY B.P., P.E.		
SCALE NOT TO SCALE		**SD 2-01**

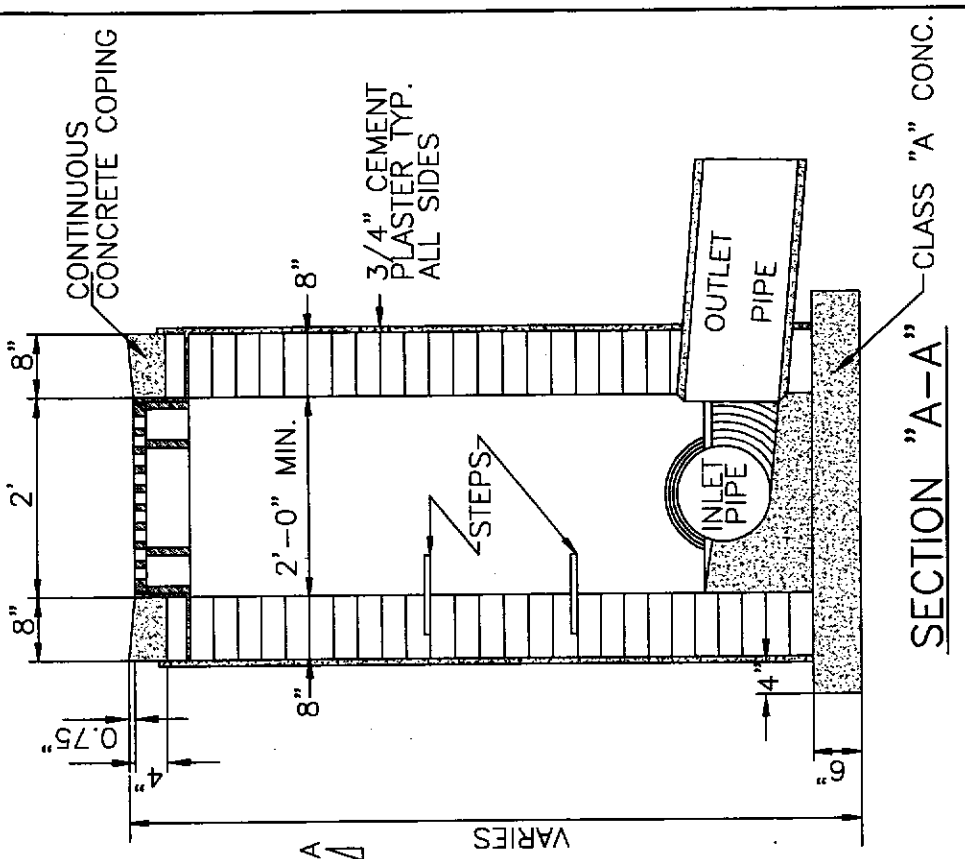

SECTION "A-A"

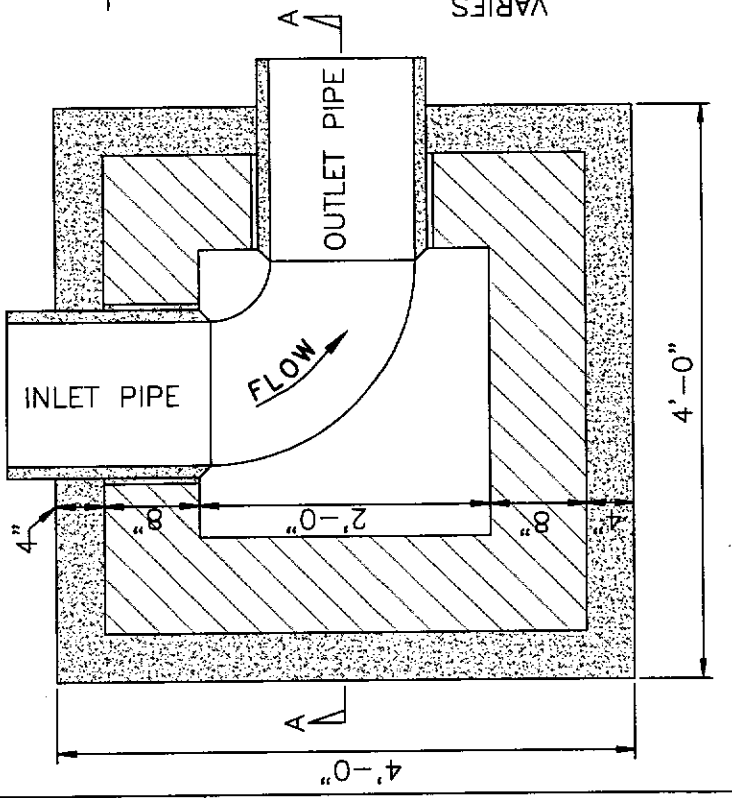

PLAN

NOTE:
FRAME AND GRATE TO BE STANDARD CITY OF WILMINGTON CAST IRON FRAME AND GRATE PER SD 14-04

GRILL BASIN
SD 2-02

	STANDARD DETAIL	CITY OF WILMINGTON ENGINEERING OFFICE 305 CHESTNUT STREET PO. BOX 1810 WILMINGTON N.C. 28402 (910) 341-7807
DATE: 2001	GRILL BASIN	
DRAWN BY JSR		
CHECKED BY B.P., P.E.		
SCALE NOT TO SCALE		SD 2-02

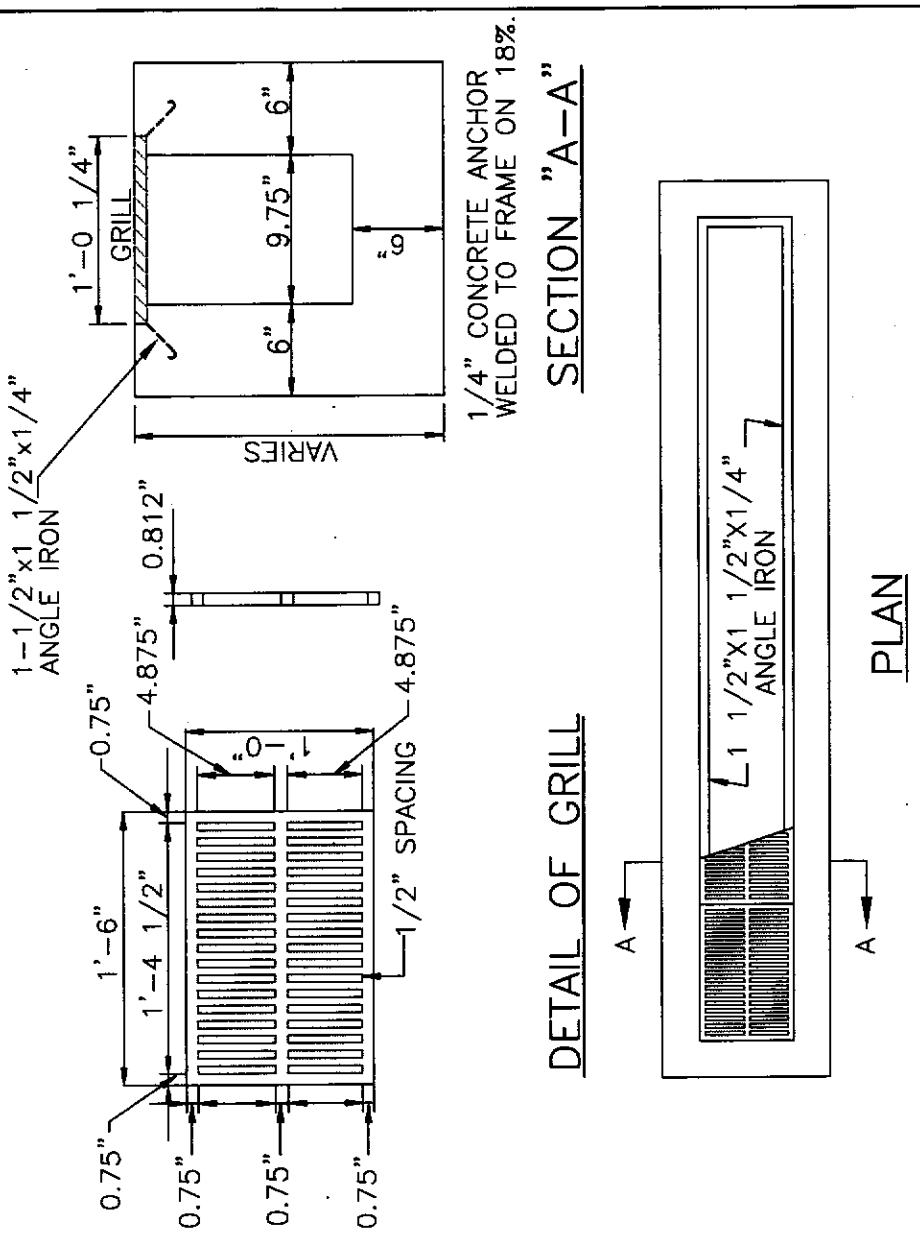

TROUGH TYPE DROP INLET BASIN

SD 2-06

	STANDARD DETAIL	CITY OF WILMINGTON ENGINEERING OFFICE 305 CHESTNUT STREET PO. BOX 1810 WILMINGTON N.C. 28402 (910) 341-7807
DATE: 2001	TROUGH TYPE DROP INLET BASIN	
DRAWN BY JSR/CMR		
CHECKED BY B.P., P.E.		
SCALE NOT TO SCALE		SD 2-06

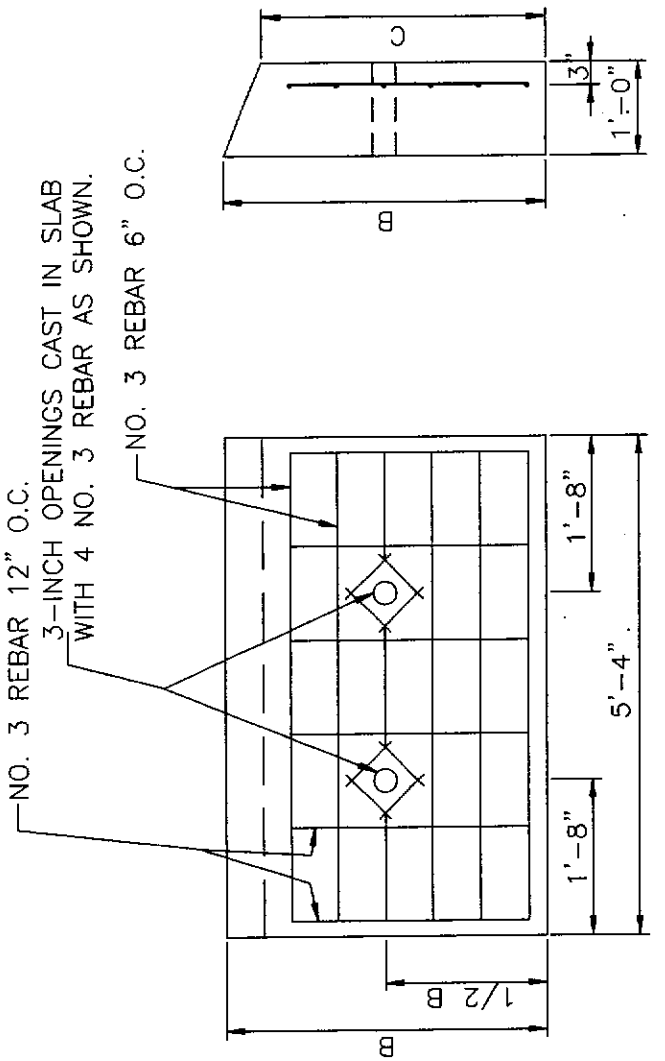

NOTES:

1. CONCRETE SHALL BE CLASS "A" (3000 PSI MIN.).
2. REBAR SHALL HAVE A MIN. COVER OF 3".
3. TOP SHALL BE SET TO BE FLUSH WITH SIDEWALK AND FLUSH WITH CATCH BASIN CASTING.
4. AFTER TOP HAS BEEN PLACED, THE CONTRACTOR SHALL FILL THE LIFTING HOLE WITH LOW STRENGTH GROUT.

PIPE SIZE	B	C
30", 36"	3'-4 1/2"	2'-11 3/4"
42"	3'-10 1/2"	3'-5 3/4"

SLAB TOP FOR MODIFIED CATCH BASIN

SD 2-11

	STANDARD DETAIL	CITY OF WILMINGTON ENGINEERING OFFICE 305 CHESTNUT STREET PO. BOX 1810 WILMINGTON N.C. 28402 (910) 341-7807
DATE: 2001	SLAB TOP FOR MODIFIED CATCH BASIN	
DRAWN BY JSR/CMR		
CHECKED BY B.P., P.E.		
SCALE NOT TO SCALE		SD 2-11

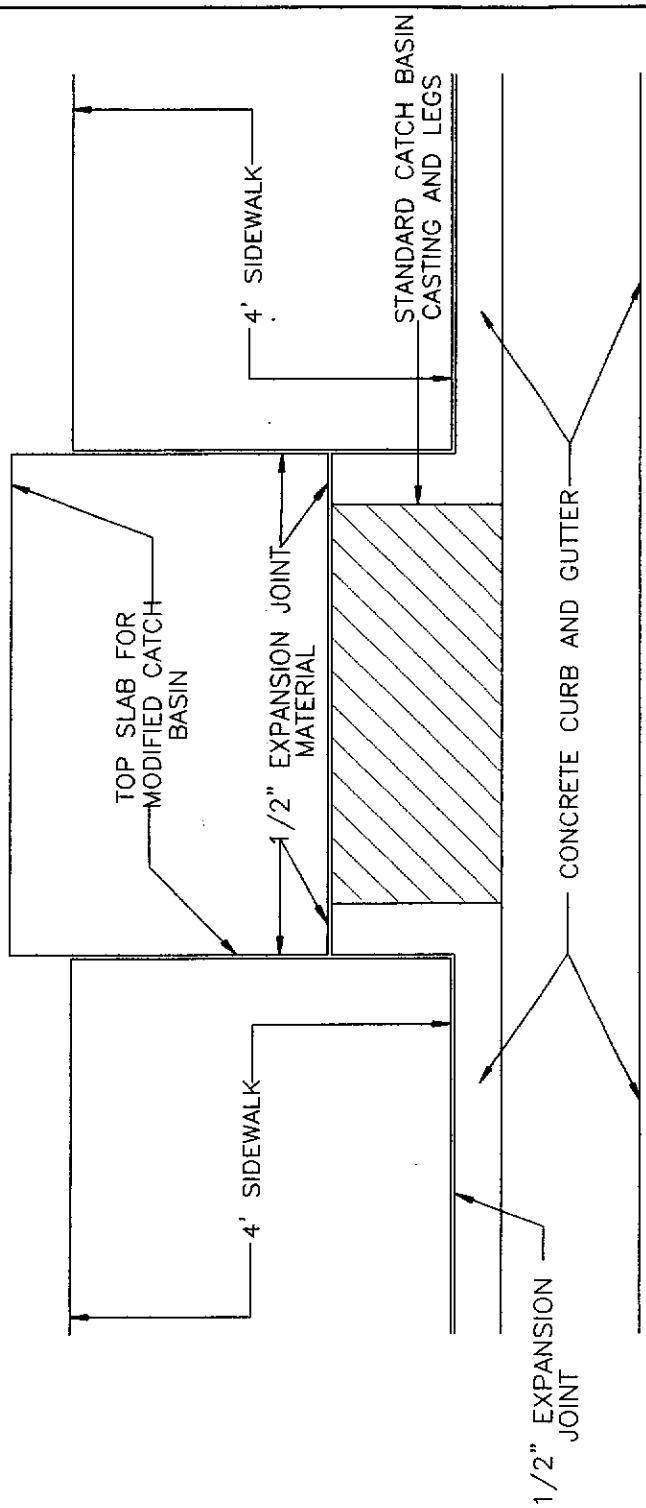

NOTES:
1. EXPANSION JOINT MATERIAL SHALL BE INSTALLED BETWEEN SLAB TOP AND SIDEWALK AND BETWEEN SIDEWALK AND CURBING.
2. CONCRETE COPING SHALL EXTEND FROM BACK OF CURB TO EDGE OF SLAB TOP.

MODIFIED CATCH BASIN SIDEWALK AND CURBING

SD 2-12

	STANDARD DETAIL	CITY OF WILMINGTON ENGINEERING OFFICE 305 CHESTNUT STREET PO. BOX 1810 WILMINGTON N.C. 28402 (910) 341-7807
DATE: 2001	MODIFIED CATCH BASIN SIDEWALK AND CURBING	
DRAWN BY JSR/CMR		
CHECKED BY B.P., P.E.		
SCALE NOT TO SCALE		SD 2-12

REQUIREMENTS FOR CORRUGATED STEEL PIPE GAUGE / THICKNESS				
	CORRUGATIONS			
DIAMETER	2 2/3" X 1/2"	3" X 1"	5" X 1"	MINIMUM COVER
12 INCH	16 GAUGE (.064")	N/A	N/A	2 FEET
15 INCH	16 GAUGE (.064")	N/A	N/A	2 FEET
18 INCH	16 GAUGE (.064")	N/A	N/A	2 FEET
24 INCH	16 GAUGE (.064")	N/A	N/A	2 FEET
30 INCH	14 GAUGE (.079")	N/A	N/A	2 FEET
36 INCH	14 GAUGE (.079")	14 GAUGE (.079")	14 GAUGE (.079")	2 FEET
42 INCH	12 GAUGE (.109")	12 GAUGE (.109")	12 GAUGE (.109")	2 FEET
48 INCH	12 GAUGE (.109")	12 GAUGE (.109")	12 GAUGE (.109")	2 FEET
54 INCH	12 GAUGE (.109")	12 GAUGE (.109")	12 GAUGE (.109")	2 FEET
60 INCH	10 GAUGE (.138")	12 GAUGE (.109")	12 GAUGE (.109")	2 FEET
66 INCH	10 GAUGE (.138")	12 GAUGE (.109")	12 GAUGE (.109")	2 FEET
72 INCH	10 GAUGE (.138")	12 GAUGE (.109")	12 GAUGE (.109")	2 FEET
78 INCH	8 GAUGE (.168")	12 GAUGE (.109")	12 GAUGE (.109")	2 FEET
84 INCH	8 GAUGE (.168")	12 GAUGE (.109")	12 GAUGE (.109")	2 FEET
90 INCH	N/A	10 GAUGE (.138")	10 GAUGE (.138")	2 FEET
96 INCH	N/A	10 GAUGE (.138")	10 GAUGE (.138")	2 FEET
102 INCH	N/A	8 GAUGE (.168")	8 GAUGE (.168")	2 FEET
108 INCH	N/A	8 GAUGE (.168")	8 GAUGE (.168")	2 FEET
114 INCH	N/A	8 GAUGE (.168")	8 GAUGE (.168")	2 FEET
120 INCH	N/A	8 GAUGE (.168")	8 GAUGE (.168")	2 FEET

NOTES:

1. ALL CORRUGATED STEEL PIPE SHALL BE GALVANIZED AND FULLY BITUMINOUS COATED AND INVERT PAVED.
2. ALL CORRUGATED STEEL PIPE GREATER THAN 60 INCHES IN DIAMETER SHALL BE FULLY PAVED (SMOOTH FLOW).
3. CORRUGATED STEEL PIPE SHALL NOT BE USED FOR SIZES LESS THAN 60 INCHES EXCEPT BY PERMISSION OF THE CITY ENGINEER.
4. ARCH PIPE SHALL GENERALLY BE THE SAME GAUGE REQUIRED FOR THE EQUIVALENT ROUND PIPE.
5. ALL CORRUGATED STEEL PIPE WITH COVER GREATER THAN 25 FEET SHALL BE REVIEWED AND EVALUATED TO DETERMINE THE REQUIRED THICKNESS.

REQUIREMENTS FOR CORRUGATED STEEL PIPE GAUGE/THICKNESS

SD 2-13

	STANDARD DETAIL	CITY OF WILMINGTON ENGINEERING OFFICE 305 CHESTNUT STREET PO. BOX 1810 WILMINGTON N.C. 28402 (910) 341-7807
DATE: 2001	REQUIREMENT FOR CORRUGATED STEEL PIPE GUAGE/THICKNESS	SD 2-13
DRAWN BY JSR/CMR		
CHECKED BY B.P., P.E.		
SCALE NOT TO SCALE		

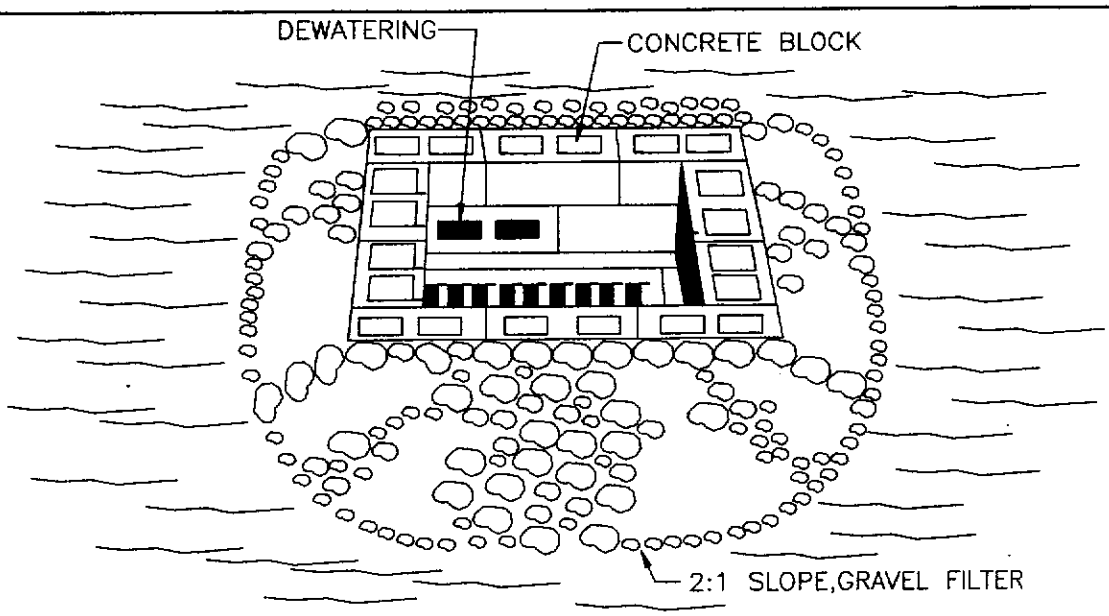

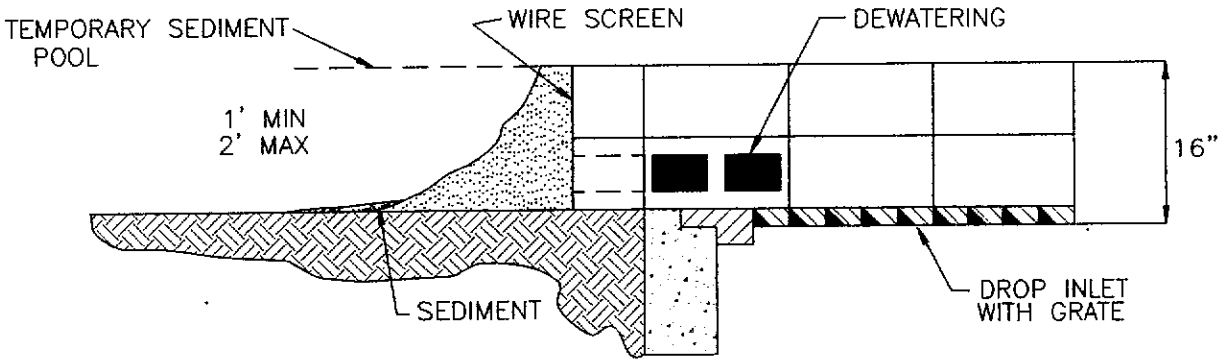

CONSTRUCTION SPECIFICATIONS

1. LAY ONE BLOCK ON EACH SIDE OF THE STRUCTURE ON ITS SIDE IN THE BOTTOM ROW TO ALLOW POOL DRAINAGE. THE FOUNDATION SHOULD BE EXCAVATED AT LEAST 2" BELOW THE CREST OF THE STORM DRAIN. PLACE THE BOTTOM ROW OF BLOCKS AGAINST THE EDGE OF THE STORM DRAIN FOR LATERAL SUPPORT AND TO AVOID WASHOUTS WHEN OVERFLOW OCCURS. IF NEEDED, GIVE LATERAL SUPPORT TO SUBSEQUENT ROWS BY PLACING 2x4 WOOD STUDS THROUGH BLOCK OPENINGS.

2. CAREFULLY FIT HARDWARE CLOTH OR COMPARABLE WIRE MESH WITH 1/2-INCH OPENINGS OVER ALL BLOCK OPENINGS TO HOLD GRAVEL IN PLACE.

3. USE CLEAN GRAVEL, 3/4 TO 1/2-INCH IN DIAMETER, PLACED 2 INCHES BELOW THE TOP OF THE BLOCK ON A 2:1 SLOPE OR FLATTER AND SMOOTH IT TO AN EVEN GRADE. D.O.T #57 WASHED STONE IS RECOMMENDED.

DROP INLET PROTECTION

SD 2-14

	STANDARD DETAIL	CITY OF WILMINGTON ENGINEERING OFFICE 305 CHESTNUT STREET PO. BOX 1810 WILMINGTON N.C. 28402 (910) 341-7807
DATE: 2001	**DROP INLET PROTECTION**	
DRAWN BY JSR/CMR		
CHECKED BY B.P., P.E.		
SCALE NOT TO SCALE		SD 2-14

PIPE OUTLET TO FLAT AREA
NO WELL-DEFINED CHANNEL

PLAN

NOTES:

1. La IS THE LENGTH OF THE RIPRAP APRON.
2. d = 1.5 TIMES THE MAXIMUM STONE DIAMETER BUT NOT LESS THAN 6'.
3. IN A WELL - DEFINED CHANNEL EXTEND THE APRON UP THE CHANNEL BANKS TO AN ELEVATION OF 6" ABOVE THE MAXIMUM TAILWATER DEPTH OR TO THE TOP OF THE BANK, WHICHEVER IS LESS.
4. A FILTER BLANKET OR FILTER FABRIC SHOULD BE INSTALLED BETWEEN THE RIPRAP AND SOIL FOUNDATION.

PIPE OUTLET PROTECTION
SD 2-15

	STANDARD DETAIL	CITY OF WILMINGTON ENGINEERING OFFICE 305 CHESTNUT STREET PO. BOX 1810 WILMINGTON N.C. 28402 (910) 341-7807
DATE: 2001	PIPE OUTLET PROTECTION	
DRAWN BY JSR/CMR		
CHECKED BY B.P., P.E.		
SCALE NOT TO SCALE		SD 2-15

FIG. 1
CLASS – C
SHAPED BOTTOM
LOAD FACTOR
1.5

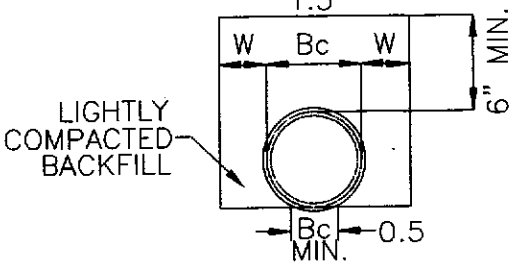

HAND SHAPED FROM
FIRM UNDISTURBED SOIL

FIG. 2
CLASS – C
SHAPED BOTTOM
LOAD FACTOR
1.5

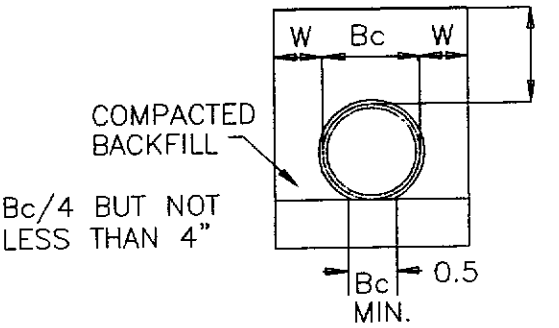

HAND SHAPED FROM
ANGULAR BEDDING MATERIAL

FIG. 3
CLASS – B

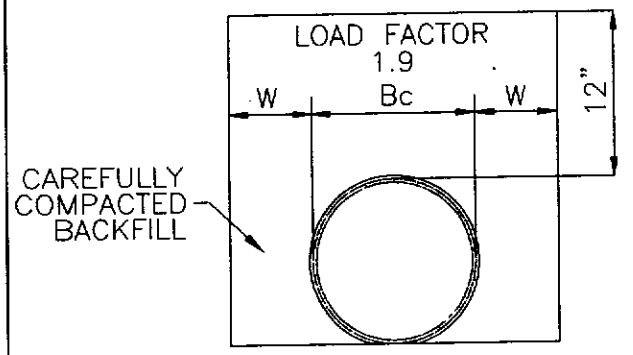

HAND SHAPED FROM
UNDISTURBED FIRM SOIL

FIG. 3
CLASS – B

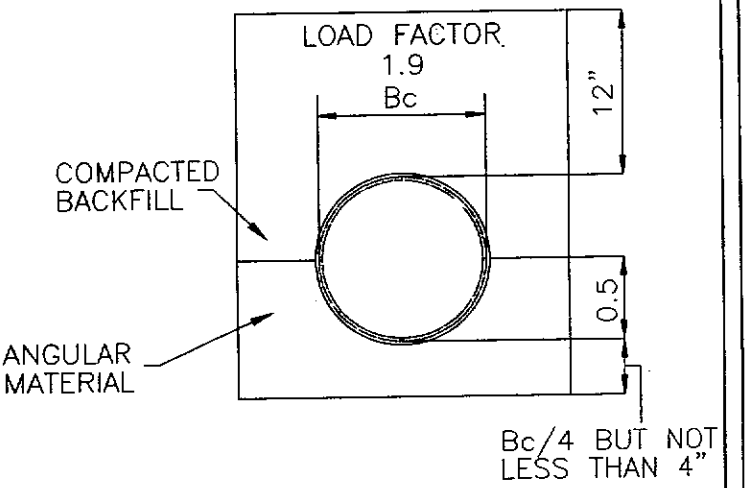

GUIDELINES FOR BEDDING DETAILS, STORM SEWER CLASSES (B & C)

SD 2–17

	STANDARD DETAIL	CITY OF WILMINGTON ENGINEERING OFFICE 305 CHESTNUT STREET PO. BOX 1810 WILMINGTON N.C. 28402 (910) 341–7807
DATE: 2001	GUIDELINES FOR BEDDING DETAILS, STORM SEWER CLASSES (B & C)	SD 2-17
DRAWN BY JSR/CMR		
CHECKED BY B.P., P.E.		
SCALE NOT TO SCALE		

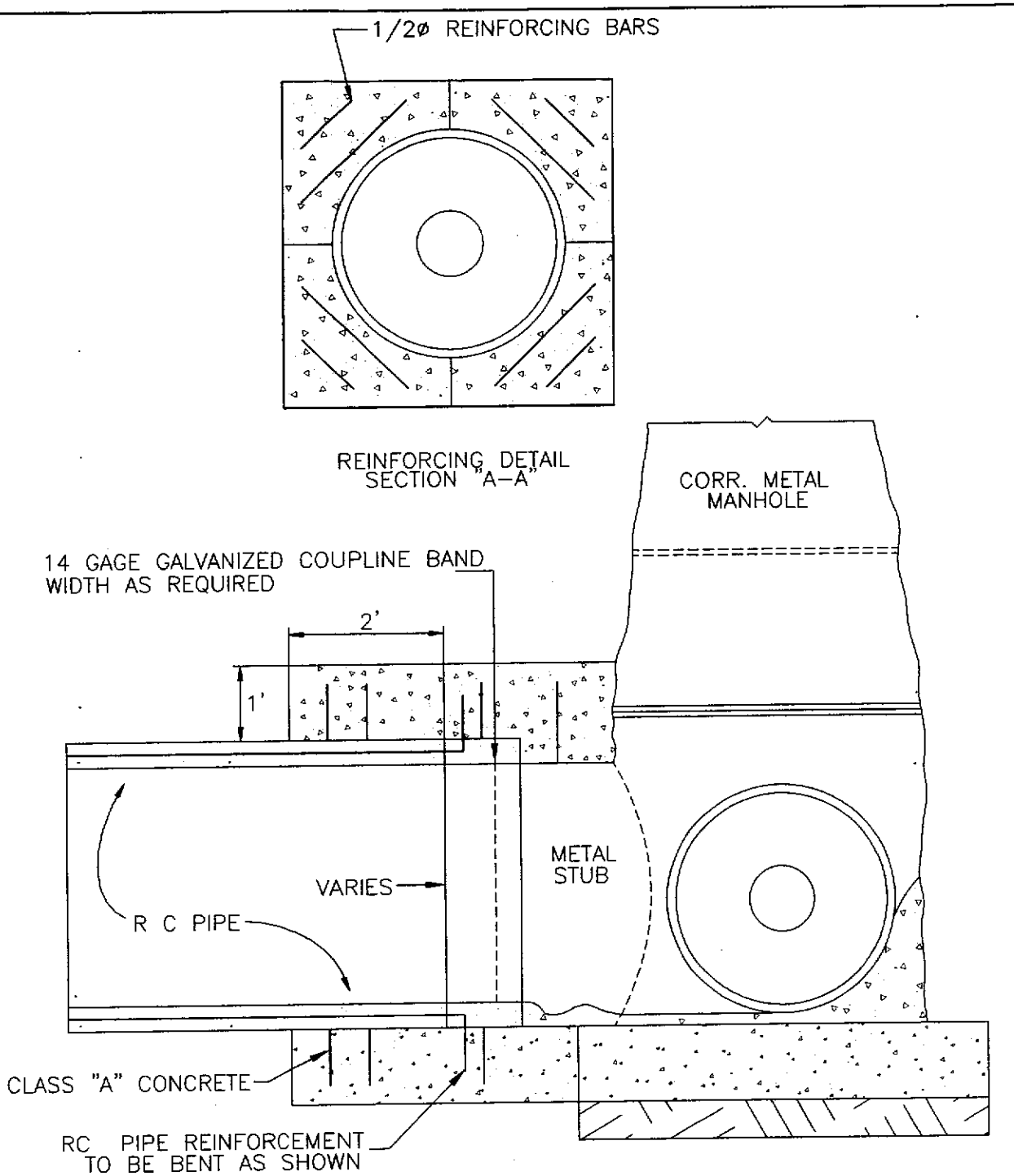

PIPE CONNECTION – METAL TO CONCRETE

SD 2–18

	STANDARD DETAIL	CITY OF WILMINGTON ENGINEERING OFFICE 305 CHESTNUT STREET PO. BOX 1810 WILMINGTON N.C. 28402 (910) 341-7807
DATE: 2001	PIPE CONNECTION- METAL TO CONCRETE	
DRAWN BY JSR/CMR		
CHECKED BY B.P., P.E.		
SCALE NOT TO SCALE		SD 2-18

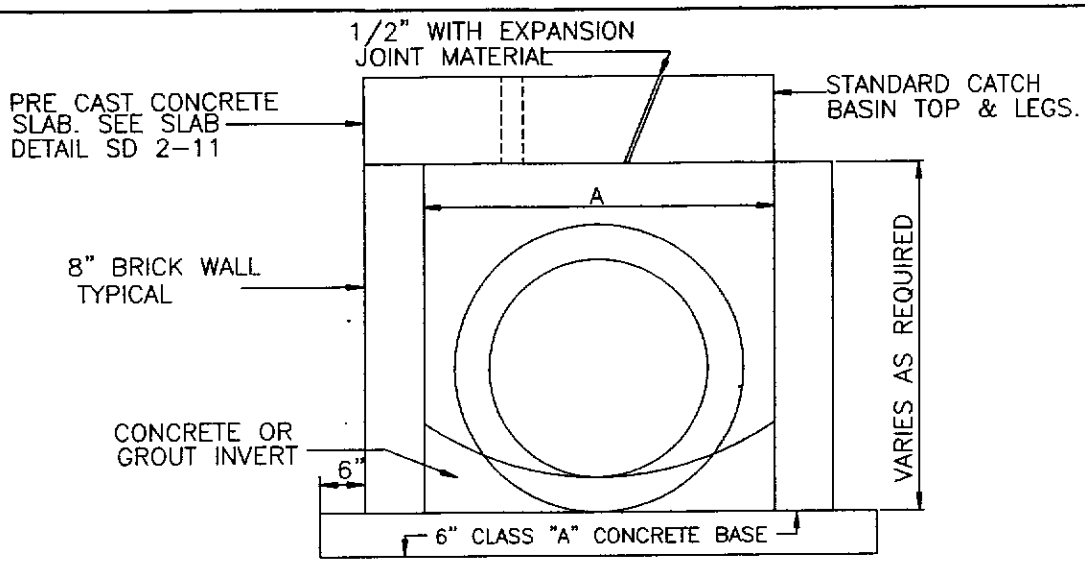

PIPE SIZE	A
30" , 36"	4'-0"
42"	4'-6"

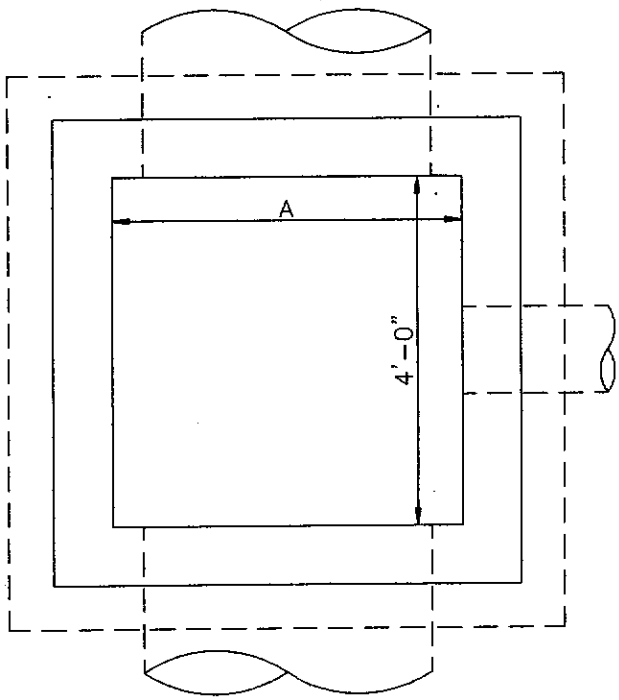

MODIFIED CATCH BASIN FOR PIPES LARGER THAN 24 INCH ENTERING THE END(S) OF THE BASIN

SD 2-10

	STANDARD DETAIL	CITY OF WILMINGTON ENGINEERING OFFICE 305 CHESTNUT STREET PO. BOX 1810 WILMINGTON N.C. 28402 (910) 341-7807
DATE: 2001	MODIFIED CATCH BASIN FOR PIPES LARGER THAN 24" ENTERING END OF THE BASIN	
DRAWN BY JSR/CMR		
CHECKED BY B.P., P.E.		
SCALE NOT TO SCALE		SD 2-10

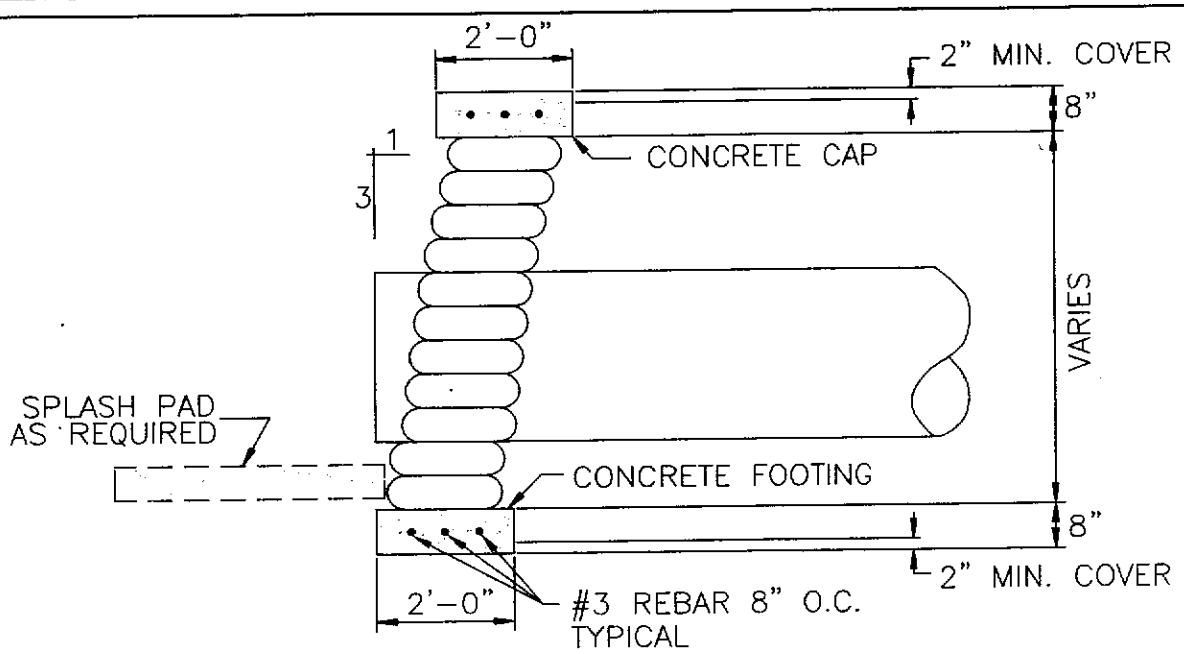

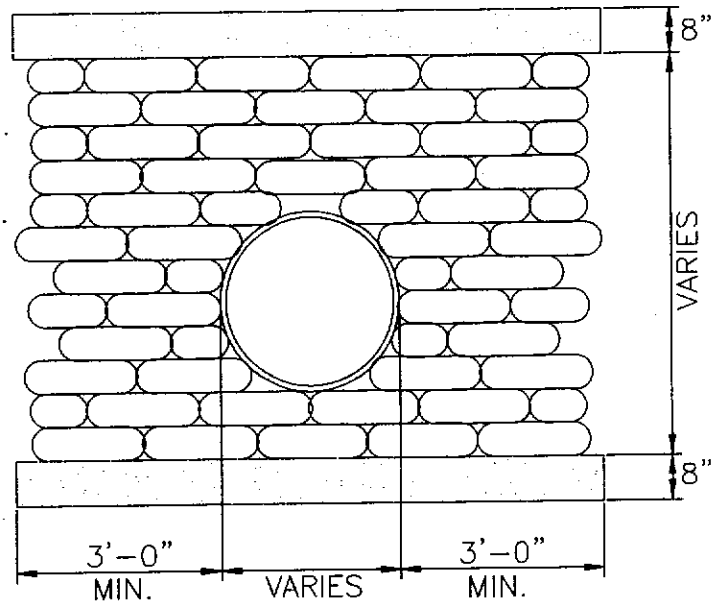

NOTES:
1. MINIMUM 1 LAYER OF BAGS UNDER PIPE.
2. TOP OF FOOTING 1' BELOW STREAM BED.
3. WIDTH OF WALL DETERMINED BY SIZE & SHAPE OF CHANNEL.

SAND CEMENT BAG HEADWALL
SD 2-09

	STANDARD DETAIL	CITY OF WILMINGTON ENGINEERING OFFICE 305 CHESTNUT STREET PO. BOX 1810 WILMINGTON N.C. 28402 (910) 341-7807
DATE: 2001	SAND CEMENT BAG HEADWALL	
DRAWN BY JSR/CMR		
CHECKED BY B.P., P.E.		
SCALE NOT TO SCALE		SD 2-09

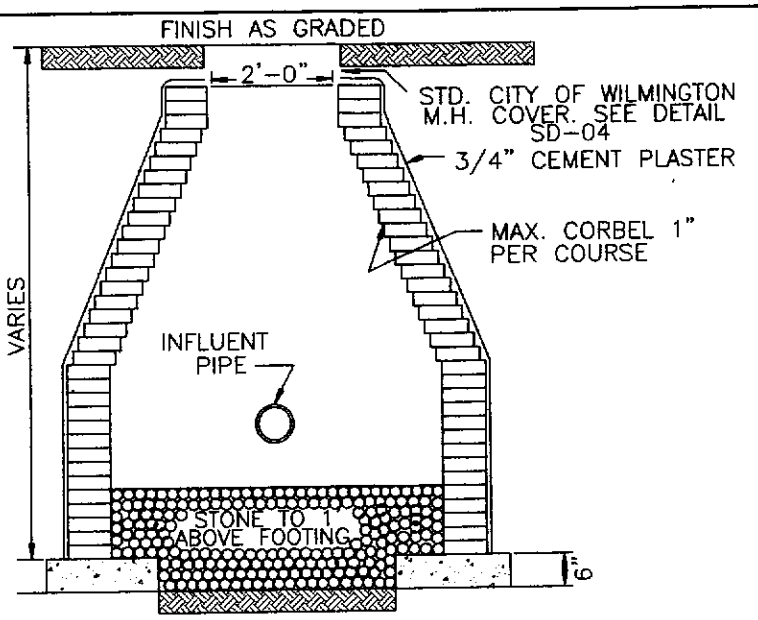

SECTION "A-A"

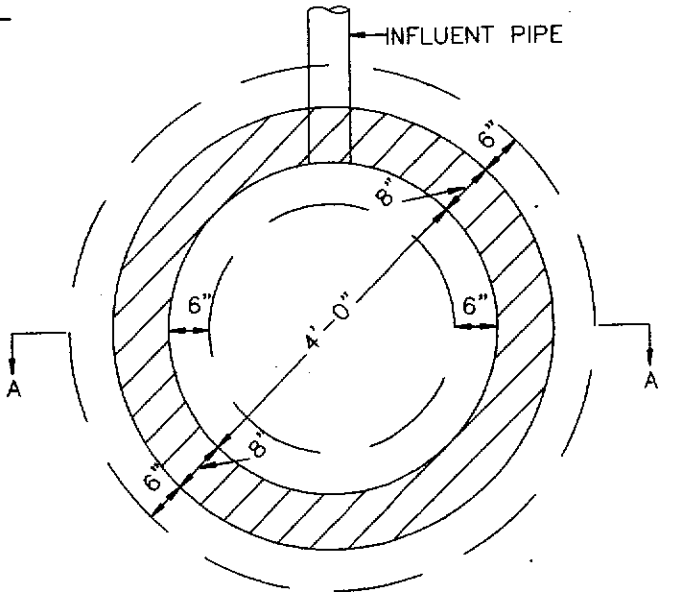

PLAN

DRY WELL

SD 2-08

	STANDARD DETAIL	CITY OF WILMINGTON ENGINEERING OFFICE 305 CHESTNUT STREET PO. BOX 1810 WILMINGTON N.C. 28402 (910) 341-7807
DATE: 2001	DRY WELL	
DRAWN BY JSR/CMR		
CHECKED BY B.P., P.E.		
SCALE NOT TO SCALE		SD 2-08

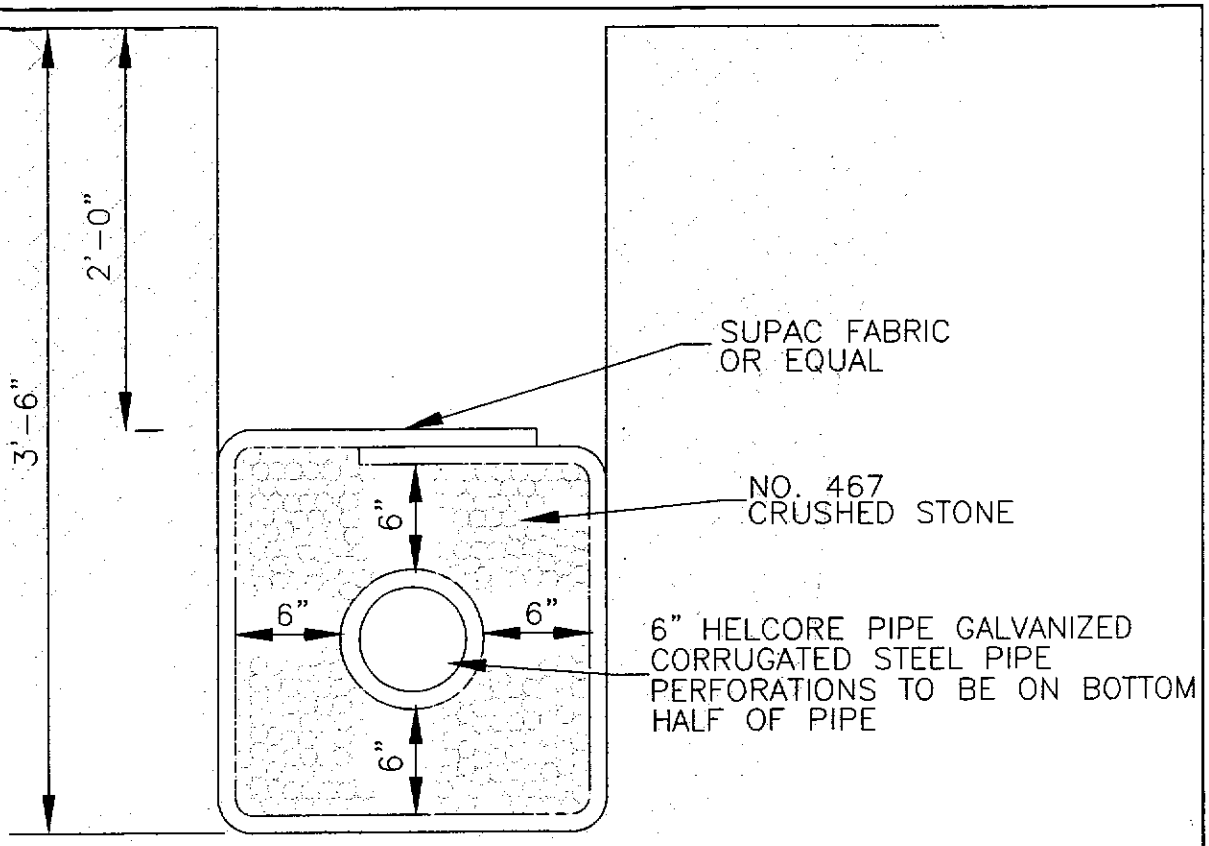

TYPICAL SECTION

GUIDELINES FOR SUB-DRAIN

SD 2-04

	STANDARD DETAIL	
DATE: 2001	GUIDELINES FOR SUBDRAIN	CITY OF WILMINGTON ENGINEERING OFFICE 305 CHESTNUT STREET PO. BOX 1810 WILMINGTON N.C. 28402 (910) 341-7807
DRAWN BY JSR/CMR		
CHECKED BY B.P., P.E.		
SCALE NOT TO SCALE		SD 2-04

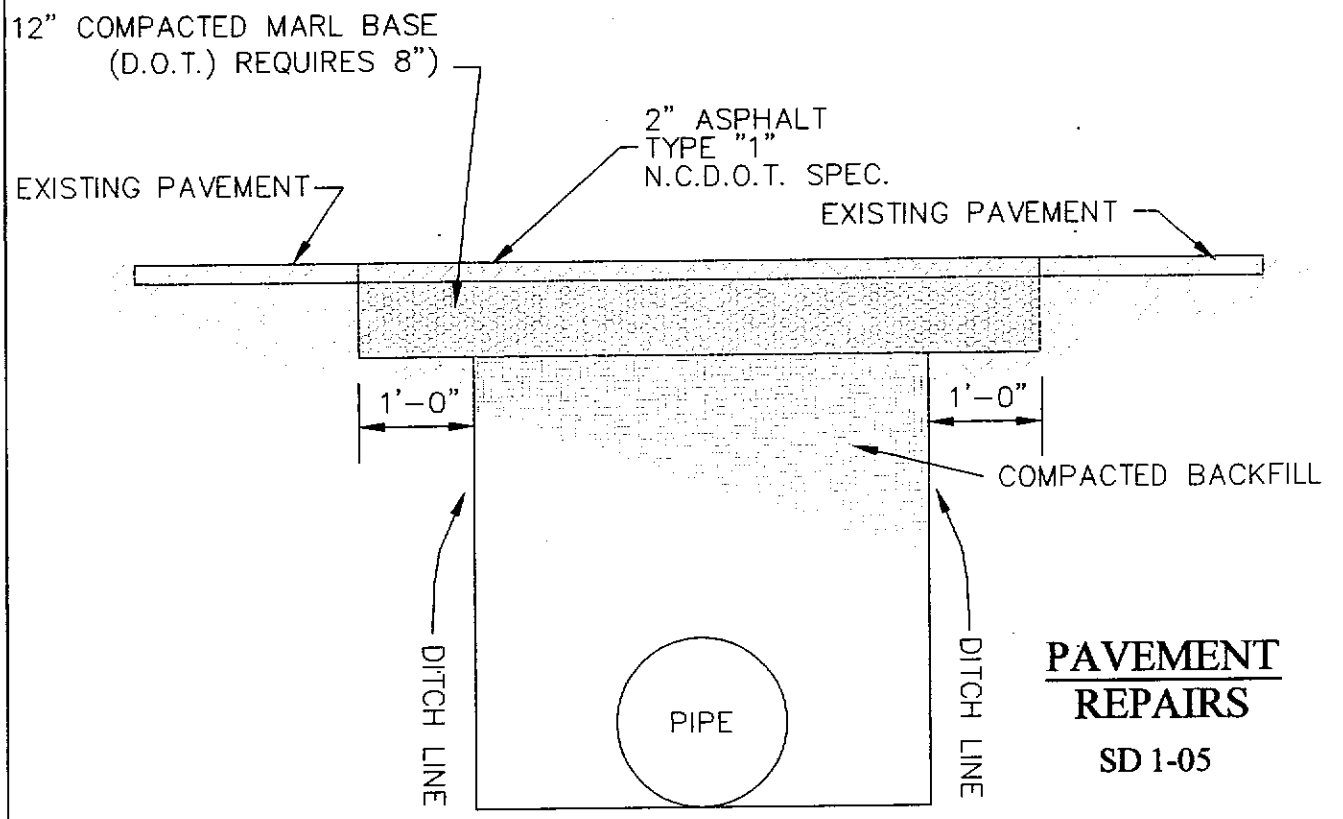

PAVEMENT REPAIRS

SD 1-05

NOTES:

* BACKFILL TO BE INSTALLED IN 6" LIFTS (MAXIMUM) AND COMPACTED TO A MINIMUM DENSITY OF 95% AS DETERMINED BY THE MODIFIED A.A.S.H.T.O. STANDARD METHOD T-99
* CUT - BACK TO BE PREPARED AFTER TRENCH BACKFILLING AND COMPACTION

STANDARD SHOWING METHOD MAKING PAVEMENT REPAIRS WHERE PIPE IS INSTALLED

	STANDARD DETAIL	CITY OF WILMINGTON ENGINEERING OFFICE 305 CHESTNUT STREET PO. BOX 1810 WILMINGTON N.C. 28402 (910) 341-7807
DATE: 2001	PAVEMENT REPAIRS	SD 1-05
DRAWN BY JSR/CMR		
CHECKED BY B.P., P.E.		
SCALE NOT TO SCALE		

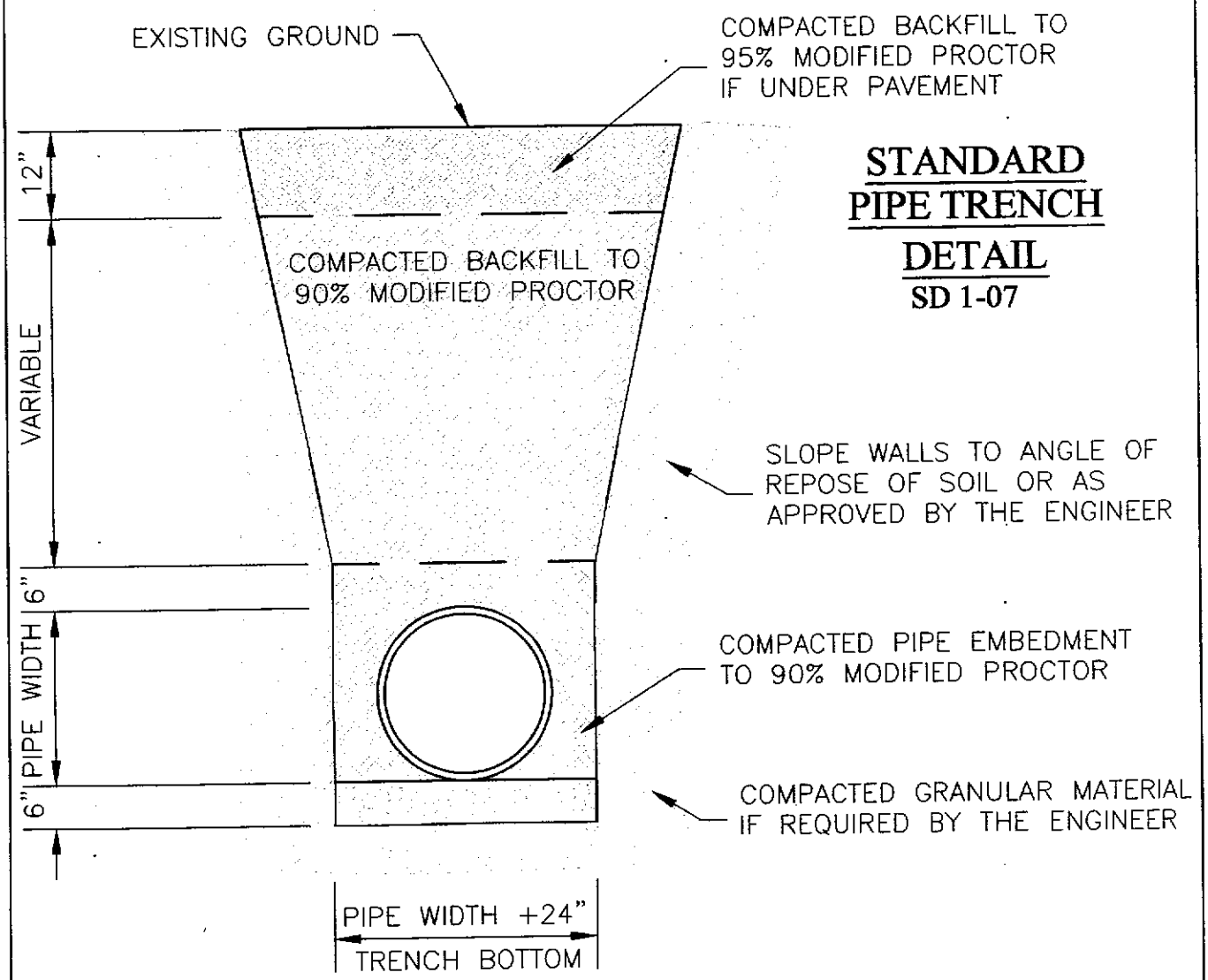

STANDARD PIPE TRENCH DETAIL

SD 1-07

	STANDARD DETAIL	CITY OF WILMINGTON ENGINEERING OFFICE 305 CHESTNUT STREET PO. BOX 1810 WILMINGTON N.C. 28402 (910) 341-7807
DATE: 2001	STANDARD PIPE TRENCH DETAIL	
DRAWN BY JSR/CMR		
CHECKED BY B.P., P.E.		
SCALE NOT TO SCALE		SD 1-07

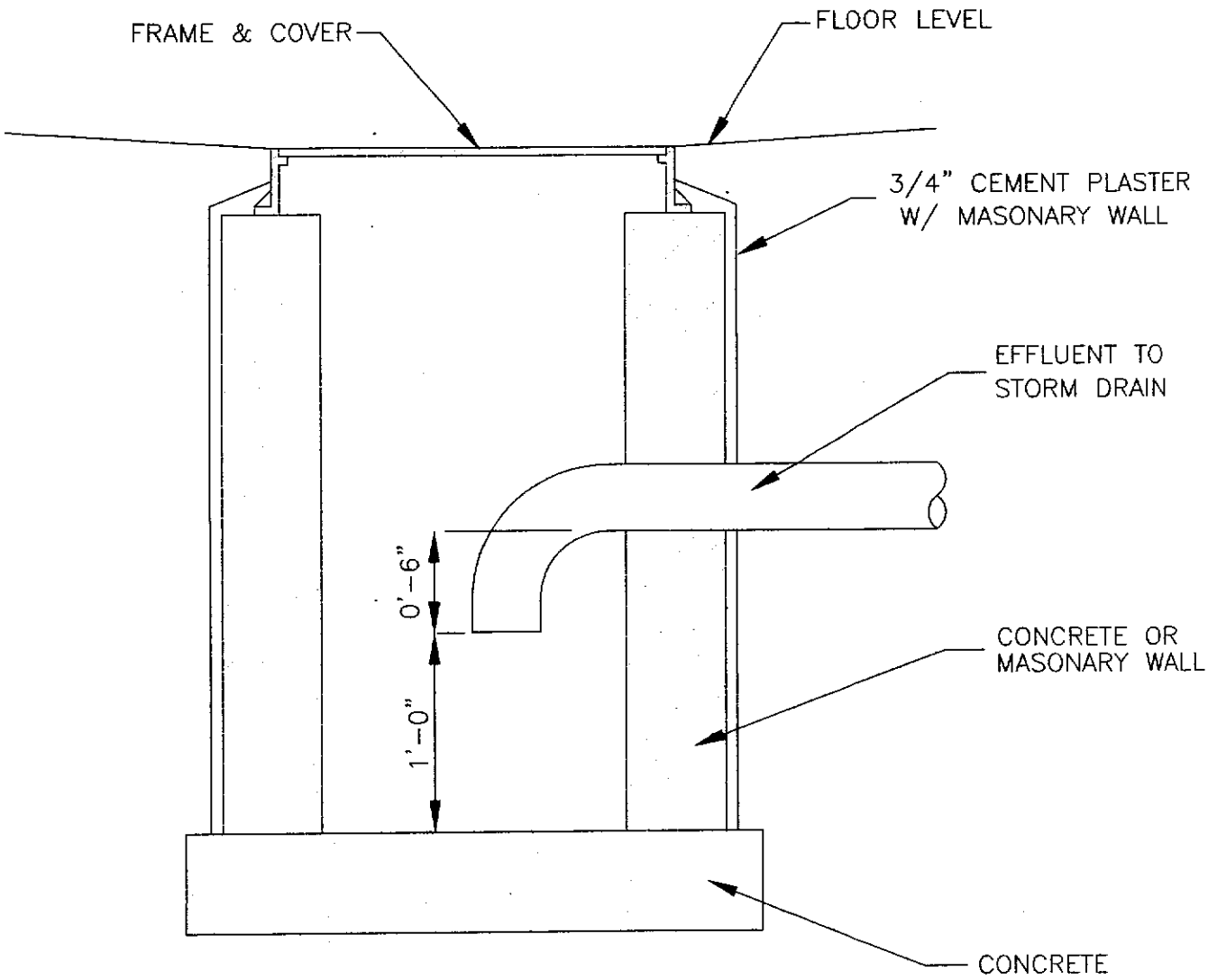

SAND AND GREASE INTERCEPTOR BOX

SD 15-06

NOT TO SCALE

	STANDARD DETAIL	CITY OF WILMINGTON ENGINEERING OFFICE 305 CHESTNUT STREET PO. BOX 1810 WILMINGTON N.C. 28402 (910) 341-7807
DATE: 2001	SAND AND GREASE INTERCEPTOR BOX	
DRAWN BY JSR/CMR		
CHECKED BY B.P., P.E.		
SCALE NOT TO SCALE		SD 15-06

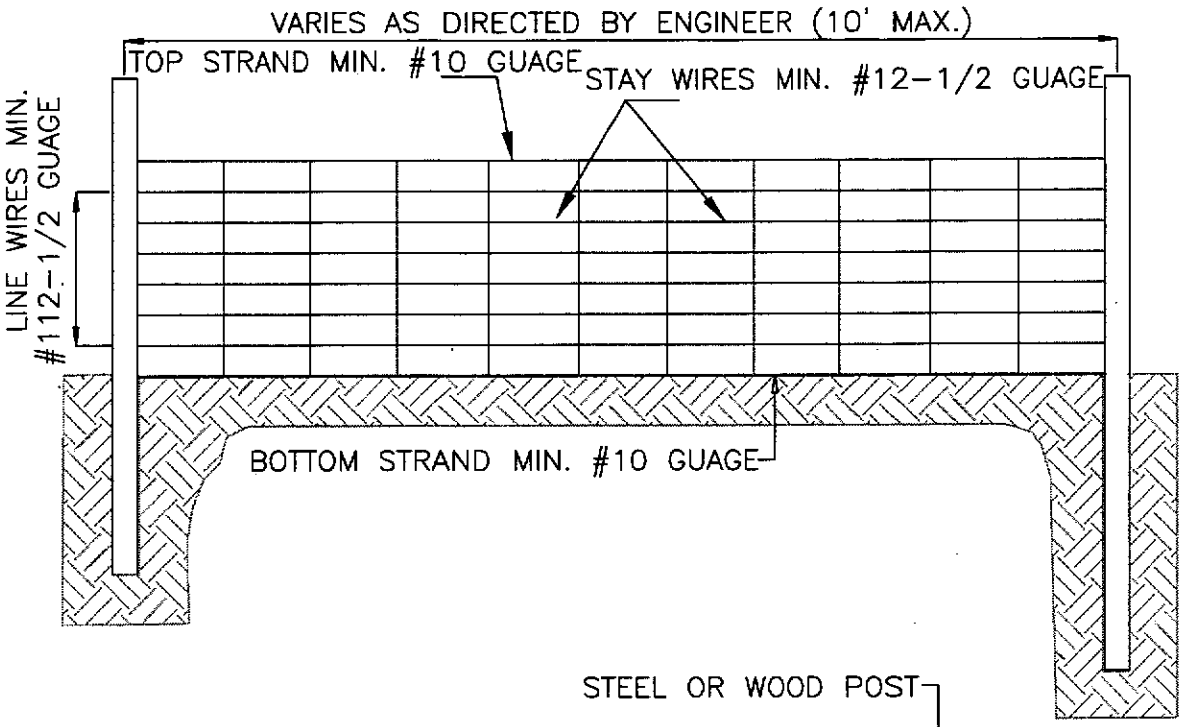

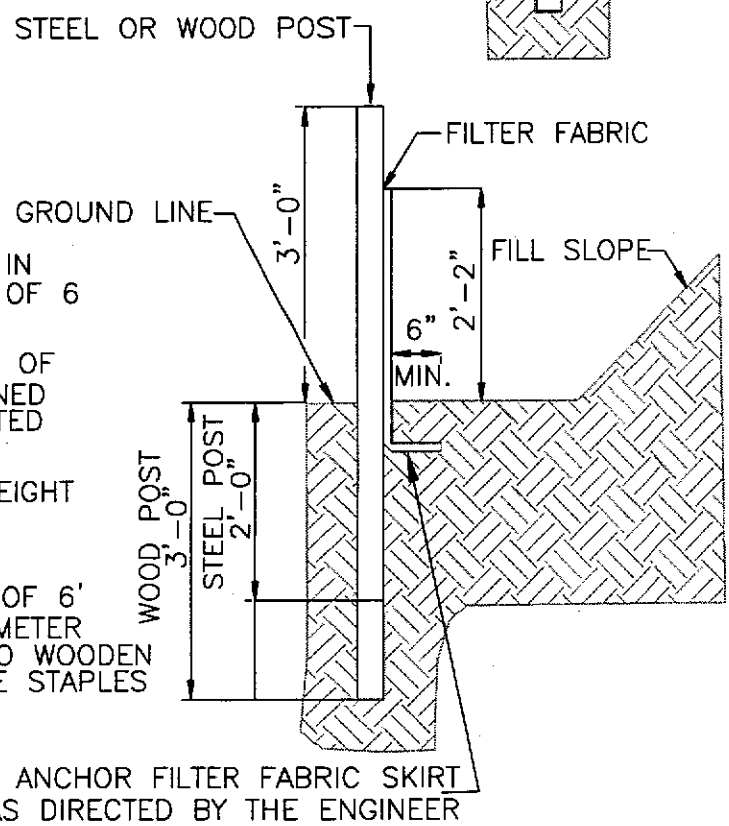

NOTES:

1. WIRE SHALL BE A MINIMUM OF 32" IN WIDTH AND SHALL HAVE A MINIMUM OF 6 LINE WIRES W/12" STAY SPACING
2. FILTER FABRIC SHALL BE A MINIMUM OF 36" IN WIDTH AND SHALL BE FASTENED ADEQUATELY TO THE WIRE AS DIRECTED BY THE ENGINEER
3. STEEL POSTS SHALL BE 5'-0" IN HEIGHT AND BE OF SELF FASTENER ANGLE STEEL TYPE
4. WOOD POSTS SHALL BE A MINIMUM OF 6' IN HEIGHT AND 3" OR MORE IN DIAMETER WIRE FABRIC SHALL BE FASTENED TO WOODEN POST WITH NOT LESS THAN #9 WIRE STAPLES 1-1/2" LONG

GUIDELINES FOR TEMPORARY SILT FENCE DETAIL

SD 13-01

	STANDARD DETAIL	CITY OF WILMINGTON ENGINEERING OFFICE 305 CHESTNUT STREET PO. BOX 1810 WILMINGTON N.C. 28402 (910) 341-7807
DATE: 2001	GUIDELINES FOR TEMPORARY SILT FENCE	
DRAWN BY JSR/CMR		
CHECKED BY B.P., P.E.		
SCALE NOT TO SCALE		SD 13-01

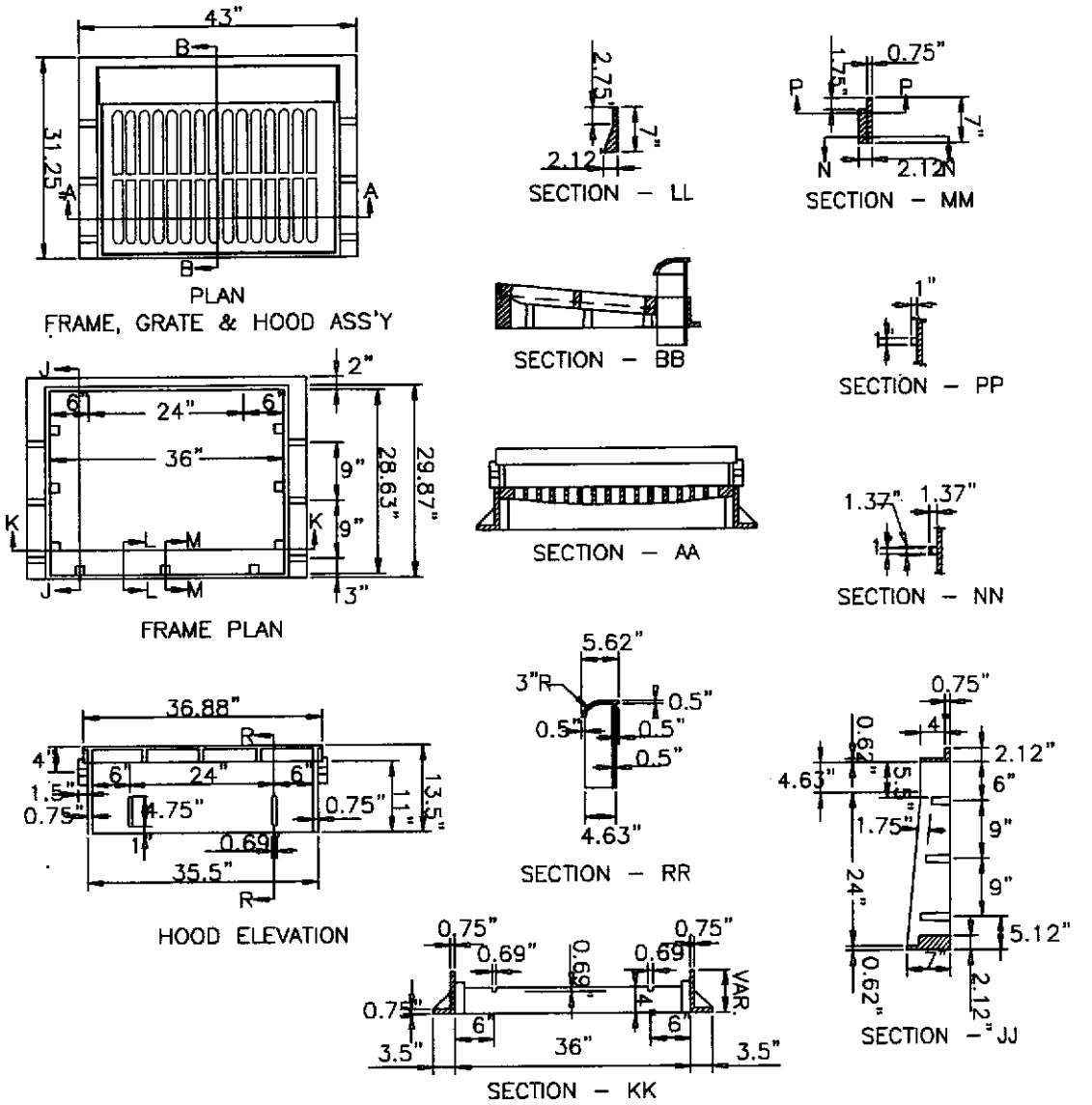

NOTES: 1) USE TYPE "E","F",& "G" GRATE UNLESS OTHERWISE INDICATED

2) TOP OF HOOD CASTING SHALL HAVE REAISED LETTERS WHICH SAY: "KEEP STORM DRAIN CLEAN! DRAINS TO CREEK" PROVIDE PICTURE OF FISH BETWEEN TWO STATEMENTS.

CATCH BASIN CASTING FOR
30" HOOD AND GRATE
SD 2-19

	STANDARD DETAIL	CITY OF WILMINGTON ENGINEERING OFFICE 305 CHESTNUT STREET PO. BOX 1810 WILMINGTON N.C. 28402 (910) 341-7807
DATE: 2001	CATCH BASIN CASTING FOR 30" HOOD AND GRATE	
DRAWN BY JSR/CMR		
CHECKED BY B.P., P.E.		
SCALE NOT TO SCALE		SD 2-19

DETAIL SHOWING TYPES OF GRATES TO BE USED ACCORDING TO WATER FLOW.

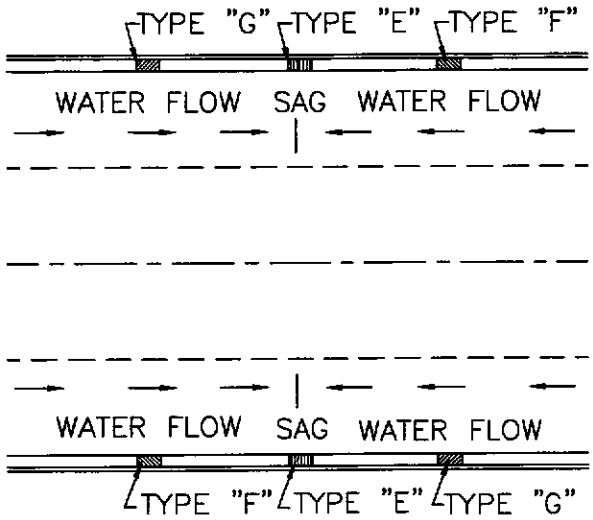

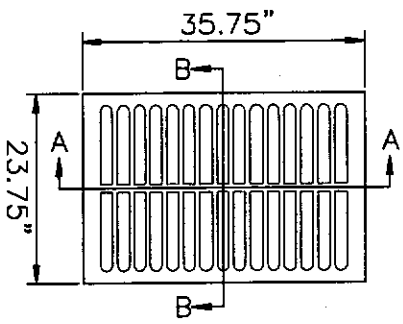

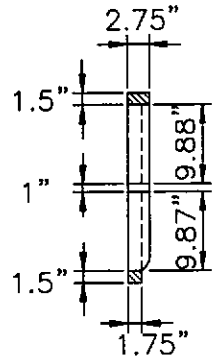

SECTION – BB

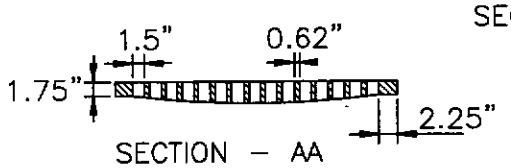

SECTION – AA

TYPE – E

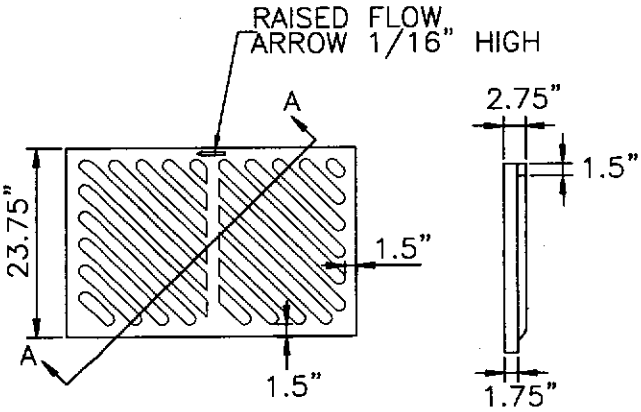

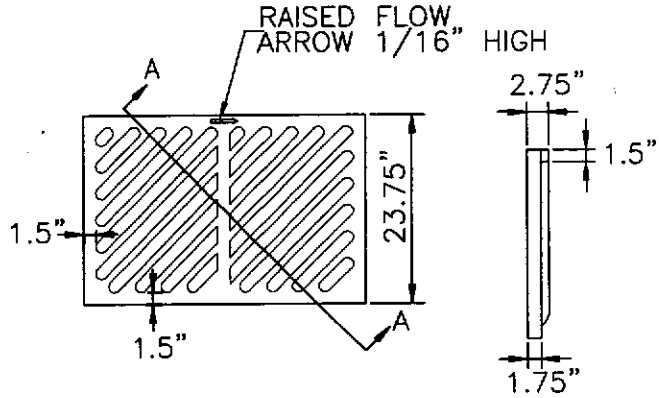

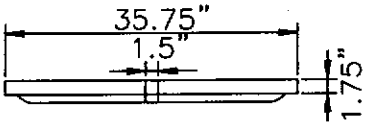

TYPE – F

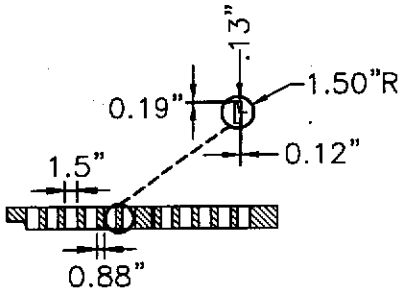

SECTION – AA

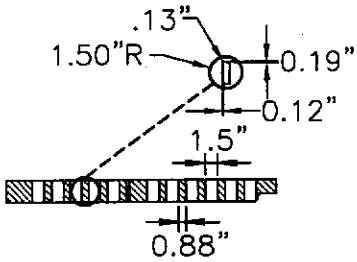

SECTION – AA

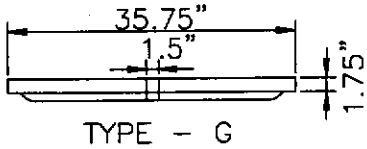

TYPE – G

	STANDARD DETAIL	CITY OF WILMINGTON ENGINEERING OFFICE 305 CHESTNUT STREET PO. BOX 1810 WILMINGTON N.C. 28402 (910) 341–7807
DATE: 2001	CATCH BASIN GRATE FOR 30" HOOD AND GRATE	
DRAWN BY JSR/CMR		
CHECKED BY B.P., P.E.		
SCALE NOT TO SCALE		SD 2-20

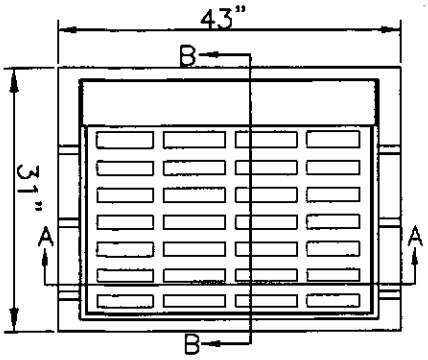

PLAN
FRAME, GRATE & HOOD ASS'Y

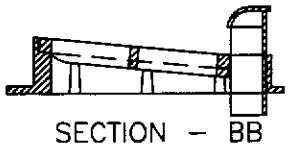

SECTION – BB

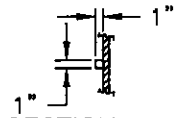

SECTION – PP

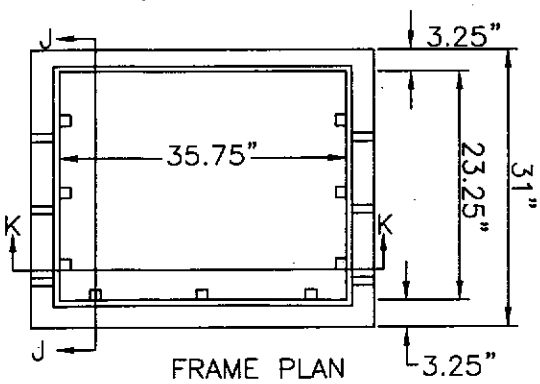

FRAME PLAN

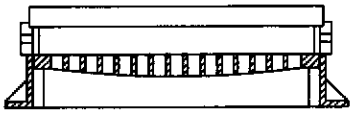

SECTION – AA

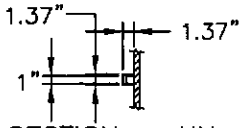

SECTION – NN

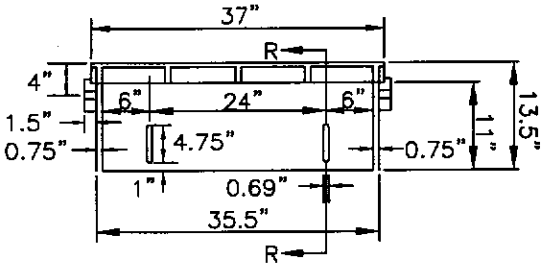

HOOD ELEVATION

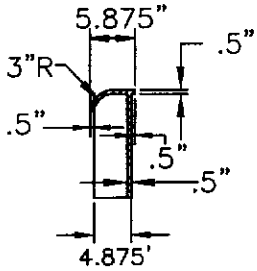

SECTION – RR

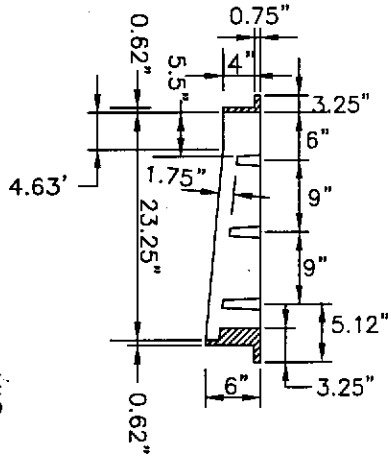

SECTION – JJ

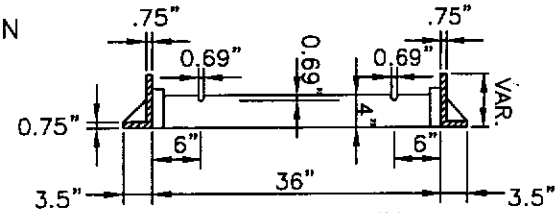

SECTION – KK

CATCH BASIN CASTING FOR 24" HOOD AND GRATE

SD 2-21

NOTE: USE TYPE "E","F",& "G" GRATE UNLESS OTHERWISE INDICATED

	STANDARD DETAIL	CITY OF WILMINGTON ENGINEERING OFFICE 305 CHESTNUT STREET PO. BOX 1810 WILMINGTON N.C. 28402 (910) 341-7807
DATE: 2001	CATCH BASIN CASTING FOR 24" HOOD AND GRATE	
DRAWN BY JSR/CMR		
CHECKED BY B.P., P.E.		
SCALE NOT TO SCALE		SD 2-21

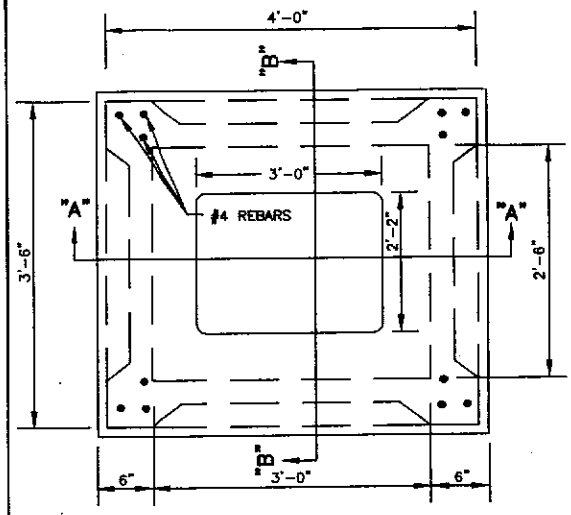

WAFFLE WALL PLAN VIEW

NOTE:

THE PATTERN OF THE KNOCK-OUT PANEL'S ARE SHOWN FOR ILLUSTRATIVE PURPOSED ONLY

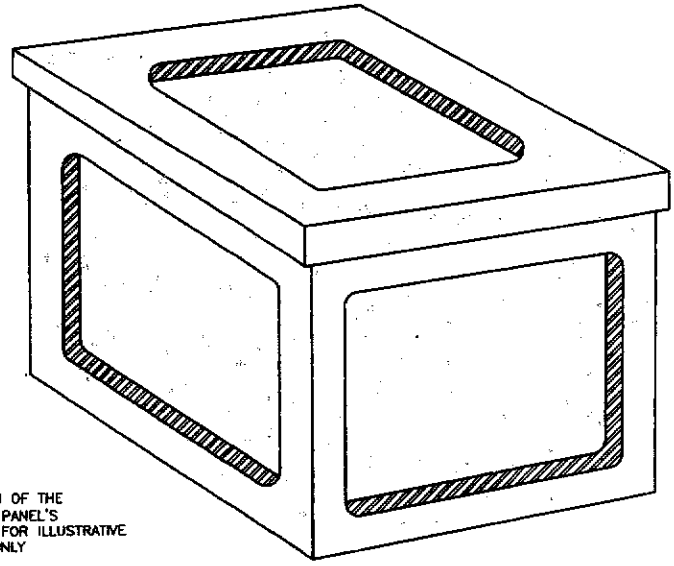

WAFFLE WALL ISOMETRIC VIEW

NOTE: SEE SD-23a FOR GENERAL NOTES.

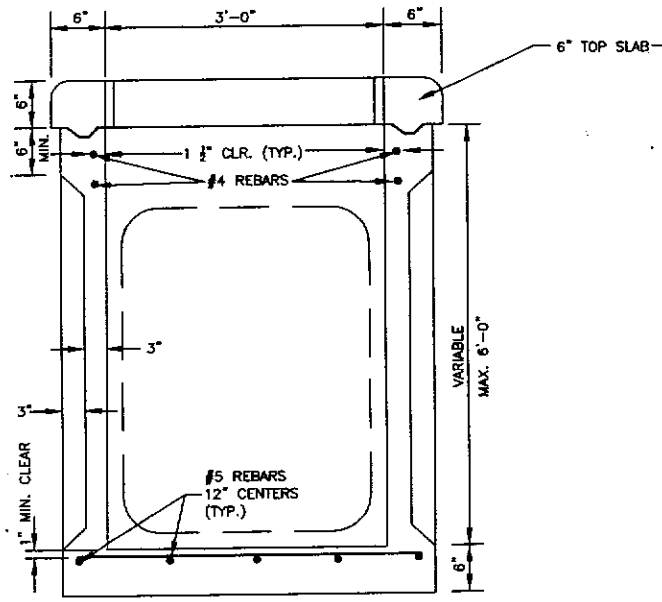

SECTION "A-A"

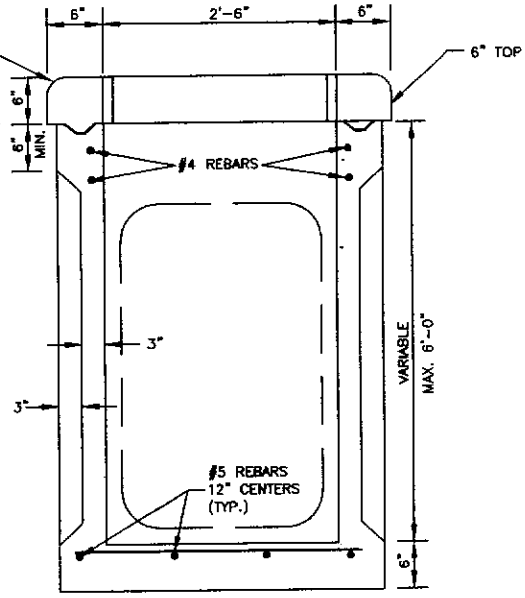

SECTION "B-B"

PRECAST DRAINAGE WAFFLE STRUCTURE
SD 2-23

	STANDARD DETAIL	CITY OF WILMINGTON ENGINEERING OFFICE 305 CHESTNUT STREET PO. BOX 1810 WILMINGTON N.C. 28402 (910) 341-7807
DATE: 2001	PRECAST WAFFLE DRAINAGE STRUCTURE	
DRAWN BY JSR/CMR		
CHECKED BY B.P., P.E.		
SCALE NOT TO SCALE		SD 2-23

GENERAL NOTES:

* USE 4000 PSI CONCRETE, PROVIDE FOR H-20 TRAFFIC LOADING.
* PROVIDE ALL REINFORCING STEEL WHICH MEETS ASTM A615 FOR GRADE 60 AND WELDED WIRE FAVRIC CONFORMING TO ASTM A185,
* LIMIT MAXIMUM DEPTH TO TOP OF BOTTOM SLAB FOR WAFFLE WALL STRUCTURE TO 6'-0".
* PLACE LIFT HOLES OR PINS IN ACCORDANCE WITH OSHA STANDARD 1926.704
* SAW CUT, CORE DRILL ORFORM OPENINGS, FOR PIPE TO PROVIDE REQUIRED SIZE AND LOCATION. ORIENT WAFFLE WALL STRUCTURES SO THAT PIPES ENTER THROUGH THE KNOCKOUT/WAFFLE PANELS ONLY. SEAL OPENINGS WITH HYDRAULIC CEMENT.
* ALL ELEMENTS PRECAST TO MEET ASTM C913.
* SET ON 6" WASHED STONE
* FRAME AND GRATE HEIGHT MAY BE ADJUSTED WITH BRICK.
* PROVIDE PRECAST STURCTURES OVER 4'-0" IN DEPTH WITH STEPS/LADDER INSTALLED IN ACCORDANCE WITH ASHA STANDARD 1910.27 AND AS FIELD CONDITIONS DICTATE.
* WELDED WIRE FABRIC MAY BE SUBSTITUTED FOR REBAR AS LONG AS THE SAME AREA OF STEEL IS PROVIDED,
* SEAL JOINTS WITH A FLEXIBLE BUTYL RUBBER BASE CONFORMING TO FEDERAL SPECIFICATION SS-S-21A, AASHTO M-19B, TYPE B - BUTYL RUBBER.
* LIMIT MAXIMUM STRUCTURE SIZE TO INSIDE CLEAR DEMENSIONS OF 2'- 6" x 3' - 0".
* USE FRAME AND GRATE AS PER SD-19.
* GROUT INVERT TO PROVIDE SMOOTH FLOW

	STANDARD DETAIL	CITY OF WILMINGTON ENGINEERING OFFICE 305 CHESTNUT STREET PO. BOX 1810 WILMINGTON N.C. 28402 (910) 341-7807
DATE: 2001	PRECAST WAFFLE DRAINAGE STRUCTURE GENERAL NOTES	
DRAWN BY JSR/CMR		
CHECKED BY B.P., P.E.		
SCALE NOT TO SCALE		SD 2-23a

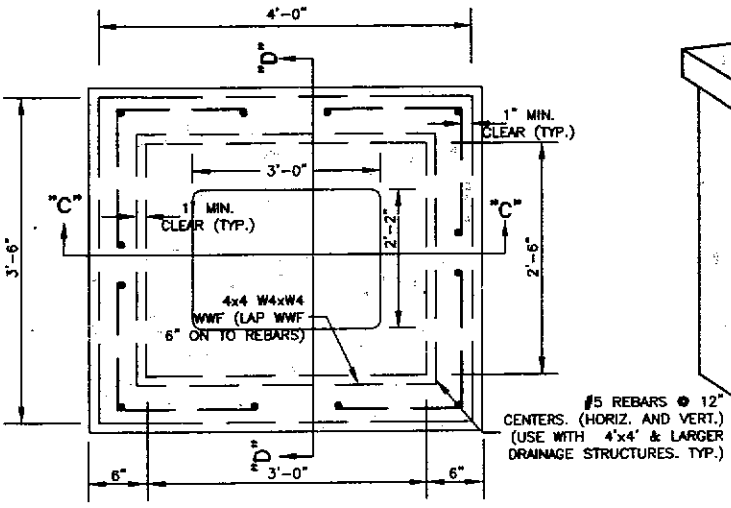

SOLID WALL PLAN VIEW

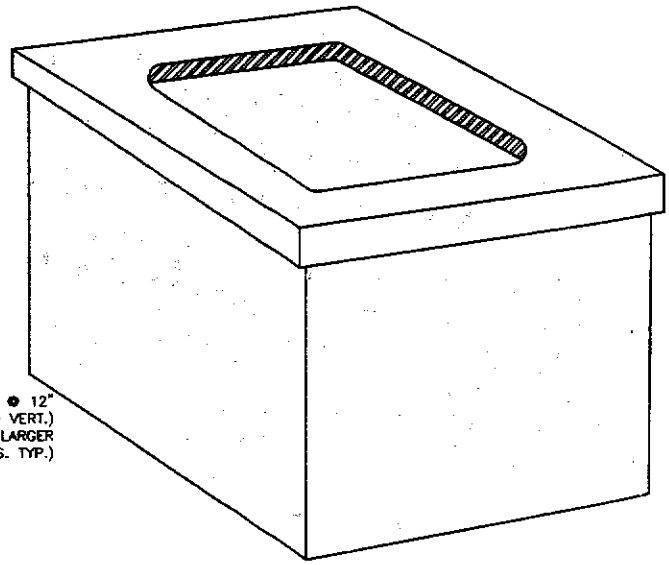

SOLID WALL ISOMETRIC VIEW

NOTE: SEE SD-24a FOR GENERAL NOTES.

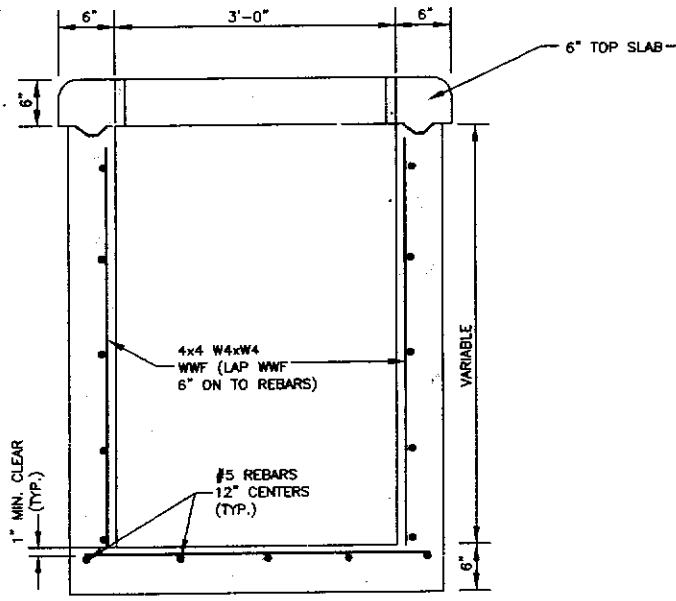

SECTION "C-C"

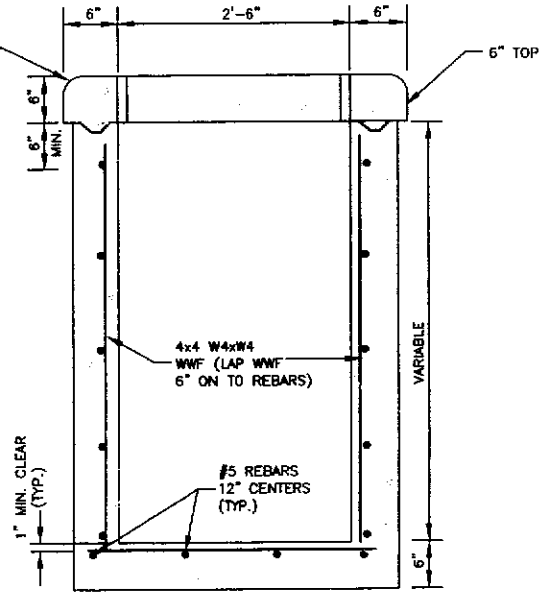

SECTION "D-D"

PRECAST DRAINAGE STRUCTURE
SOLID WALL
SD 2-24

	STANDARD DETAIL	CITY OF WILMINGTON ENGINEERING OFFICE 305 CHESTNUT STREET PO. BOX 1810 WILMINGTON N.C. 28402 (910) 341-7807
DATE: 2001	PRECAST DRAINAGE STRUCTURE SOLID WALL	
DRAWN BY JSR/CMR		
CHECKED BY B.P., P.E.		
SCALE NOT TO SCALE		SD 2-24

GENERAL NOTES:

* USE 4000 PSI CONCRETE, PROVIDE FOR H-20 TRAFFIC LOADING.
* PROVIDE ALL REINFORCING STEEL WHICH MEETS ASTM A615 FOR GRADE 60 AND WELDED WIRE FAVRIC CONFORMING TO ASTM A185,
* PLACE LIFT HOLES OR PINS IN ACCORDANCE WITH OSHA STANDARD 1926.704
* PROVIDE FORMED OPENINGS, FOR PIPE TO PROVIDE REQUIRED SIZE AND LOCATION.
  SEAL OPENINGS WITH HYDRAULIC CEMENT.
* ALL ELEMENTS PRECAST TO MEET ASTM C913.
* SET ON 6" WASHED STONE
* FRAME AND GRATE HEIGHT MAY BE ADJUSTED WITH BRICK.
* PROVIDE PRECAST STURCTURES OVER 4'-0" IN DEPTH WITH STEPS/LADDER INSTALLED IN ACCORDANCE WITH ASHA STANDARD 1910.27 AND AS FIELD CONDITIONS DICTATE.
* WELDED WIRE FABRIC MAY BE SUBSTITUTED FOR REBAR AS LONG AS THE SAME AREA OF STEEL IS PROVIDED,
* SEAL JOINTS WITH A FLEXIBLE BUTYL RUBBER BASE CONFORMING TO FEDERAL SPECIFICATION SS-S-21A, AASHTO M-19B, TYPE B - BUTYL RUBBER.
* USE FRAME AND GRATE AS PER SD-19.
* GROUT INVERT TO PROVIDE SMOOTH FLOW

	STANDARD DETAIL	CITY OF WILMINGTON ENGINEERING OFFICE 305 CHESTNUT STREET PO. BOX 1810 WILMINGTON N.C. 28402 (910) 341-7807
DATE: 2001	PRECAST DRAINAGE STRUCTURE GENERAL NOTES	
DRAWN BY JSR/CMR		
CHECKED BY B.P., P.E.		
SCALE NOT TO SCALE		SD 2-24a

CHAPTER VI

LANDSCAPING

VI

LANDSCAPING

TABLE OF CONTENTS

SECTION **PAGE**

A. GENERAL 6-1

B. STREET/YARD PARKING FACILITY LANDSCAPING AND RESIDENTIAL STREET TREES 6-1

C. BUFFERYARD 6-11

D. STORMWATER FACILITY LANDSCAPING 6-17

E. TREE PROTECTION DURING CONSTRUCTION 6-17

STANDARD DETAILS 6-18

A. GENERAL

All landscaping shall be in strict accordance with Article XV, Landscaping and Tree Preservation of Chapter 19 of the City Code and the requirements of this chapter.

B. STREETYARD/PARKING FACILITY LANDSCAPING AND RESIDENTIAL STREET TREES

Street Yard and Parking Facility Landscaping shall be in street accordance with Sections 19-174 and 19-175 of Article XV of Chapter 19 of the City Code. Additional information regarding Parking Facility Landscaping can be found in Chapter VII, Section D, paragraph 2(d) and SD 15-11, SD15-12 and SD15-14 of Chapter VII. Vegetation planted pursuant to Sections 19-174 and 19-175 shall be selected from the trees, shrubs, and ground cover material listed on the following pages.

Residential street tree species and placement shall conform to SD15-17 of this chapter.

STREET YARD/PARKING FACILITY

TREES	D/E*	HGT.	SPRD.	GROWTH RATE**	LIGHT***	COMMENTS
Acer palmatum Japanese Maple	D	To 20’	15-20’	S	PSH-SH	Best in partial shade. Leaves may scorch in full sun, especially in poor, dry soil.
Acer rubrum Red Maple	D	40-60’	30-50’	M-R	S-SH	Tolerates a wide range of condition but prefers moist soils. Moderately drought tolerant and native to this area.
Acer saccharum Sugar Maple	D	60-80’	40-60’	S	S-PSH	Good shade tree with bright Fall foilage but avoid planting where growth areas are restricted, i.e. planter boxes.
Betula nigra River Birch	D	50-60’	30-50’	M-R	S-PSH	Tolerant of many soils, especially with adequate water. Native to this area.
Cercis canadensis Red Bud	D	20-25’	15-20’	M	S-PSH	Will tolerate poor soils and dry locations. Flowers best in full sun. Native to this area.
Cornus florida Dogwood	D	20-30’	20-25’	S-M	S-SH	Best in partial shade. Will tolerate full sun only if soil is kept cool and moist. Mulch is necessary. Native to this area.
Eriobotrya japonica Loquat	E	15-20’	15-20’	M	S	Easy to grow. Prefers moist, well drained soil. Avoid fire blight by limiting excessive fertilizer.
Fraxinus pennsylvanica Green Ash	D	60-80’	40-50’	R	S	Very durable and tolerant of urban conditions.
Ginkgo biloba (male only) Ginkgo	D	50-80’	30’	S	S	Excellent urban tree. Very tough and easy to grow. Female trees drop messy, foul smelling fruits.
Ilex x attenulata ‘Fosteri #2’ Foster’s Holly	E	20’	7-10’	M	S-SH	Has a pyramidal shape. Good in narrow spaces. Heat tolerant.

STREET YARD / PARKING FACILITY

TREES	D/E*	HGT.	SPRD.	GROWTH RATE**	LIGHT***	COMMENTS
Ilex cassine Dahoon Holly	E	15-20’	10-15’	R	S-SH	Good small evergreen tree.
Ilex opaca American Holly	E	15-30’	25-20’	M	S-SH	Best in well drained, acidic soils.
Ilex vomitoria Yaupon Holly	E	To 25’	8-10’	S-M	S-SH	Very tough holly. Tolerates heat, drought, wet or dry soils and exposed conditions. Native.
Koelreuteria paniaculata Golden Rain Tree	D	25-30’	15-20’	M	S	Very adaptable and tolerant. Will grow almost anywhere, except on poorly drained sites. Striking yellow flowers.
Lagerstroemia indica Crape Myrtle	D	25’	12-15’	M	S	Very adaptable and drought resistant. Blooms best in full sun.
Liquididambar styraciflua Sweet Gum	D	80-100’	40-60’	R	S	Prefers moist sites. Not for small areas. Good Fall color. Native to this area.
Liriodendron tupliifera Tulip Tree, Yellow Poplar	D	100’	60-80’	R	S	Requires adequate moisture and a large space to grow in. Native.
Magnolia grandiflora Southern Magnolia	D	50-60’	30-40’	S-M	S-PSH	Prefers moist sites. Subject to Magnesium deficiency. Give newly planted trees Epsom salts.
Magnolia soulangiana Saucer Magnolia	D	20-25’	15-20’	M	S-PSH	Prefers moist sites and blooms best in full sun.
Magnolia stellata Star Magnolia	D	12’	6-8’	S-M	S-PSH	Same as M. soulangiana above.
Magnolia virginiana Sweet Bay	Semi-E	20-30’	10-15’	M	S-PSH	Good on wet sites. Tolerates shade better than other Magnolias. Native to this area.

STREET YARD / PARKING FACILITY

TREES	D/E*	HGT.	SPRD.	GROWTH RATE**	LIGHT***	COMMENTS
Nyssa sylvatica Black Gum	D	60-100’	30-45’	M	S-PSH	Best to transplant in Spring. Native to this area. Good Fall color.
Pinus palustris Long Leaf Pine	E	60-100’	30-40’	S then R	S	Fairly drought resistant. Grows rapidly after 3-4 yrs. old. Native.
Pinus taeda Loblolly Pine	E	80-100’	30-40’	R	S	Good for fast screening. Does well on wet sites but is moderately drought resistant. Native.
Pinus thunbergiana Japanese Black Pine	E	20-50’	20-30’	M	S	Tolerant of many conditions.
Platanus occidentalis Sycamore	D	75-110’	75-100’	R	S	Tolerant of many soils if water is adequate. Give plenty of growing space. Native.
Prunus coroliniana Cherry Laurel	E	30-40’	20-25’	M-R	S-PSH	Good on most sites except those which are hot and dry. Native to this area.
Prunus serrulata ‘Kwanzan’ Japanese Flowering Cherry	D	20-25’	10-20’	M-R	S	Double pink blossoms very showy. Best in full sun.
Pyrus calleryana ‘Bradford’ Bradford Pear	D	30-40’	25-30’	M-R	S	Very tough and tolerant of urban conditions. Prolific blooms in Spring.
Quercus acutissima Sawtooth Oak	D	40-50’	25-35’	M	S	Widely adaptable, easy to grow.
Quercus laurifolia Laurel Oak	Semi-E	40-60’	30-40’	M	S	Very tolerant of many conditions. Native.

STREET YARD / PARKING FACILITY

TREES	D/E*	HGT.	SPRD.	GROWTH RATE**	LIGHT***	COMMENTS
Quercus laurifolia 'Darlington'	E	30-50'	25-30'	M	S	More compact than Q. laurifolia above.
Quercus nigra Water Oak	Semi-E	50-80'	40-50'	M-R	S	Tolerant of a wide range of soils. Similar to Q. laurifolia. Native.
Quercus phellos Willow Oak	D	70-100'	40-60'	M	S	Will grow in a wide range of soils. Transplants easily.
Quercus virginiana Live Oak	E	40-80'	60-100'	M	S	Adaptable to many soils. Give plenty of room as it will spread with age. Native.
Taxodium distichum Bald Cypress	D	50-60'	25-30'	R	S-PSH	Prefers moist soils but will tolerate dry soils also. Very wind resistant. Native to this area.
Zelkova serrata Japanese Zelkova	D	40-60'	30-40'	M-R	S	Prefers moist soils but is very drought and wind tolerant once established. Good urban tree.

*DECIDOUS/EVERGREEN

**S-SLOW
M-MODERATE
R-RAPID

***S-SUN
PSH-PART SHADE
SH-SHADE

STREET YARD/PARKING FACILITY

SHRUBS	D/E*	HGT.	SPRD.	GROWTH RATE**	LIGHT***	COMMENTS
Abelia grandiflora Glossy Abelia	E	6-10’	4-6’	M-R	S-PSH	Best in full sun; tolerates a wide range of conditions.
Abelia grandiflora ‘Edward Goucher’	E	3-4’	3-4’	M-R	S-PSH	Very compact and blooms prolifically.
Berberis julianae Wintergreen Barberry	E	5-6’	5-7’	S-M	S-SH	Many cultivars available. Very tolerant of urban conditions.
Berberis thunbergii Japanese Barberry	E	4-5’	4-5’	S-M	S-PSH	Many cultivars available. Very tolerant of urban conditions.
Camelia japonica Common Camelia	E	8-10’	5-6’	S-M	PSH-SH	Best in fertile, acidic soils with adequate moisture; blooms best in partial shade.
Camelia sasanqua Sasanqua Camelia	E	5-8’	4-5’	M	S-SH	Will tolerate full sun if not excessively hot.
Chimonanthus praecox Wintersweet	D	12-15’	8-10’	S	S-PSH	Very fragrant flowers in winter.
Cleyera japonica Cleyera	E	10-15’	5-6’	S-M	PSH-SH	Best on east or north exposures; will not tolerate heat, high light or poorly drained soils.
Elaeagnus pungens Thorny Elaeagnus	E	8-12’	8-10’	M-R	S-PSH	Good under difficult conditions but may require frequent pruning.
Euonymus japonica Evergreen Euonymus	E	10-12’	4-5’	M-R	S-SH	Very tough, durable and adaptable.
Forsythia x intermedia Forsythia	D	6-9’	6-8’	M-R	S-PSH	Easy to grow; good on most sites.

STREET YARD/PARKING FACILITY

SHRUBS	D/E*	HGT.	SPRD.	GROWTH RATE**	LIGHT***	COMMENTS
Ilex cornuta 'Bufordi' Chinese Holly, Burford Holly	E	10-12'	6-8'	M-R	S-SH	Tolerates a wide range of soils and responds well to light fertilizing, mulch and water.
Ilex cornuta 'Burfordi Nana' Dwarf Buford Holly	E	3-4'	3-4'	M	S-SH	More compact than 'Burfordi'.
Ilex crenata						
'Helleri'	E	2-3'	3-4'	M	S-SH	Moderately drought and heat tolerant.
'Rotundifolia'	E	4-6'	4-6'	M	S-SH	"
'Convexa'	E	3-5'	4-6'	M	S-SH	"
'Compacta'	E	3-4'	4-5'	M	S-SH	"
Japanese Holly						
Ilex vomitoria Yaupon Holly	E	10-15'	8-10'	S-M	S-SH	Very tough, tolerates full sun, heat and drought very well.
Ilex vomitoria 'Nana' Dwarf Yaupon Holly	E	2-4'	3-4'	S-M	S-SH	Compact and very good in planters.
Illicium anisatum Spice Plant	E	10-12'	8-10'	M	S-PSH	Has aromatic foliage.
Juniperus chinensis						
'Blue Vase'	E	4-5'	3-4'	M-R	S	Very tough, durable and tolerant of heat and drought.
'Pfitzeriana'	E	4-6'	15-20'	M-R	S	
'Hetzi'	E	8-10'	10-12'	M-R	S	
Ligustrum lucidum	E	20'	5-10'	R	S-SH	Very tough, durable shrubs.
Ligustrum japonicum	E	6-12'	6-8'	R	S-SH	
Ligustrum sinense Privet	E	6-8'	4-6'	R	S-SH	

STREET YARD/PARKING FACILITY

SHRUBS	D/E*	HGT.	SPRD.	GROWTH RATE**	LIGHT***	COMMENTS
Myrica cerifera Wax Myrtle	E	15-25’	15-20’	M	S-SH	Tolerates a wide range of soils, sun or shade and wet sites. Native to this area.
Nandina domestica Heavenly Bamboo, Nandina	E	5-7’	3-5’	M-R	S-SH	Very drought resistant
Nerium oleander Oleander	E	6-16’	6-l2’	R	S-SH	Blooms best in full sun. All parts of the plant are poisonous if eaten.
Osmanthus fortunei Fortune’s Osmanthus	E	15’	5-7’	M	S-PSH	Best in partial shade. Has very fragrant flowers in Fall.
Photinia fraseri Fraser’s Photinia, Red Tips	E	10-l2’	8-10’	M-R	S-PSH	Will not tolerate poorly drained sites.
Photinia sersrulata Chinese Photinia, Red Tips	E	15-20	12-15’	M-R	S-PSH	Will not tolerate poorly drained sites.
Pittosporum tobira Pittosoporum	E	8-10’	10-12’	M	S-SH	Very tough and durable. Tolerates high heat areas such as parking lots.
Pittosporum tobira ‘Wheeler’s Dwarf’ Dwarf Pittosporum	E	3-4	3-4’	M	S-SH	Very compact.
Rhaphiolepis indica Indian Hawthorne	E	5-7’	4-6	S-M	S-PSH	Prefers well drained soil; moderately drought resistant; best in full sun.
Rhododendron indica Indica Azalea	E	6-10’	6-10’	M	PSH	Same as R. obtusum except will tolerate more sun.
Rhododendron obtusum Kurume Azalea	E	3-4’	3-4’	S-M	PSH-SH	Very sensitive to heat, drought and excessive fertilization. Best in shade and partial shade.

*DECIDUOUS/EVERGREEN

**S-SLOW
M-MODERATE
R-RAPID

***S-SUN
PSH-PART SHADE
SH-SHADE

STREET YARD/PARKING FACILITY

GROUND COVERS	D/E	HGT.	SPRD.	GROWTH RATE**	LIGHT***	COMMENTS
Cotoneaster horizontalis Rockspray Contoneaster	SEMI-E	3’	5’	S	S	Susceptible to fire blight.
Euonymus fortunei ‘Radicans’ Wintercreeper Euonymus	E	2’	4-6’	M-R	S-SH	Easy to grow. Will climb, especially on wooden surfaces.
Festuca ovina ‘Glauca’ Blue Fescue	E	8-12”	8-12”	M	S-PSH	Very tough, durable and tolerant of all soils except poorly drained ones.
Gardenia jasminoides ‘Radicans’ Dwarf Gardenia	E	2-3’	4’	R	S-SH	Has very fragrant flowers.
Gelsemium sempervirens Carolina Yellow Jassamine	E	3-4’	10-20’	R	S-SH	Has fragrant flowers. Blooms best in full sun. Native to this area.
Hedera helix English Ivy	E	6-10”	40-60’	R	S-SH	Best in shade or partial shade with moist soil.
Hemerocallis spp. Daylily	D-SEMI-E	2-3’	2-3’	R	S-PSH	Tolerates a wide range of soils. Blooms best in full sun. Many cultivars available.
Hypericum calycinum Aaron’s Beard	SEMI-E	12-15”	12”	M-R	S-PSH	Drought tolerant. Blooms best in full sun.
Juniperus conferta ;Blue Pacific’ ‘Compacta’ Shore Juniper	E	18-20” 8-10”	5-8’	R	S	Tolerant of poor soils, prefers sandy soils.

STREET YARD/PARKING FACILITY

GROUND COVERS	D/E	HGT.	SPRD.	GROWTH RATE**	LIGHT***	COMMENTS
Juniperus horizontalis 'Bar Harbor' 'Blue Rug' 'Plumosa" (Andorra) 'Youngstown'	E	2'	4-5'	M	S	Tolerant of heat, drought. Prefers sandy soils.
Juniperus procumbens Japanese Garden Juniper	E	20-24"	6-8'	M	S	Tolerates intense heat.
Liriope muscari Lily Turf, Monkey Grass	E	8-20"	12-18"	M	PSH-SH	Tolerates many soil types but may burn if in very dry , poor soil in full sun.
Ophiopogon japonicus Mondo Grass	E	8-12"'	6-8"	S-M	PSH-SH	Drought tolerant.
Santolina chamaecyparissus Gray Santolina, Lavender Cotton	E	12-18"	24"	M-R	S	Prefers dry, sandy soils.
Santolina virens Green Santolina	E	12-18"	24"	M-R	S	Same as above, except green in color.
GRASSES						
Bahia					S	Sow April-June 1-2#/1000 Sq. Ft.
Bermuda					S	Sow April-June 1-2#/1000 Sq. Ft.
St. Augustine					S-PSH	Sprigged or sod
Centipede					S-PSH	Sow March-May 1/4-1/2#/1000 Sq. Ft.
Rye					S	Sow Sept-Oct .-4-5#/1000 Sq. Ft.

*DECIDUOUS/EVERGREEN

**S-SLOW
M-MODERATE
R-RAPID

***S-SUN
PSH-PART SHADE
SH-SHADE

C. BUFFERYARD

Bufferyard landscaping shall be in strict accordance with Section 19-176 of Article XV of Chapter 19 of the City Code. Vegetation planted pursuant to Section 19-176 shall be selected from the trees and shrubs listed on the following pages.

BUFFERYARD

TREES	D/E*	HGT.	SPRD.	GROWTH RATE**	LIGHT***	COMMENTS
Acer rubrum Red Maple	D	40-60’	30-50’	M-R	S-SH	Tolerates a wide range of conditions but prefers moist soils. Moderately drought tolerant and native to this area.
Acer saccharum Sugar Maple	D	60-80’	40--60’	S	S-PSH	Good shade tree with bright Fall foliage.
Betula nigra River Birch	D	50-60’	20-30’	M-R	S-PSH	Tolerant of many soils, especially with adequate water. Native to this area.
Fraxinus pennsylvanica Green Ash	D	60-80’	40-50’	R	S	Very durable and tolerant of urban conditions.
Liquidambar styraciflua Sweet Gum	D	80-100’	40-60’	R	S	Prefers moist sites. Not for small areas. Good Fall color.
Liriodendron tulipifera Tulip Tree, Yellow Poplar	D	100’	60-80’	R	S	Requires adequate moisture and a large space to grow in. Native.
Magnolia grandiflora Southern Magnolia	E	50-60’	30-40’	S-M	S-PSH	Prefers moist sites. Subject to magnesium deficiency. Give newly planted trees epsom salts.
Nyssa sylvatica Black Gum	D	60-100’	30-45’	M	S-PSH	Best to transplant in Spring. Native to this area. Good Fall color.
Pinus palustris Long Leaf Pine	E	60-100’	30-40’	S then R	S	Fairly drought resistant. Grows rapidly after 3-4 years old. Native.
Pinus taeda Loblolly Pine	E	80-100’	30-40’	R	S	Good for fast screening. Does well on wet sites but is moderately drought resistant. Native.
Pinus thunbergiana Japanese Black Pine	E	20-50’	20-30’	M	S	Tolerant of many conditions.

BUFFERYARD

TREES	D/E*	HGT.	SPRD.	GROWTH RATE**	LIGHT***	COMMENTS
Platanus occidentalis Sycamore	D	75-110’	75-100’	R	S	Tolerant to many soils if water is adequate. Give plenty of space to grow. Native.
Prunus caroliniana Cherry Laurel	E	30-40’	20-25’	M-R	S-PSH	Good on most sites except those which are hot and dry. Native to this area.
Prunus serrulata ‘Kwanzan’ Japanese Flowering Cherry	D	20-25’	10-20’	M-R	S	Double pink blossoms very showy. Best in full sun.
Pyrus calleryana ‘Bradford’ Bradford Pear	D	30-40’	25-30’	M-R	S	Very tough and tolerant of urban conditions. Prolific blooms in Spring.
Quercus acutissima Sawtooth Oak	D	40-50’	25-35’	M	S	Widely adaptable, easy to grow.
Quercus laurifolia Laurel Oak	Semi-E	40-60’	30-40’	M	S	Very tolerant of many conditions. Native.
Quercus lauirifolia ‘Darlington’	E	30-50’	25-30’	M	S	More compact than Q. laurifolia above.
Quercus nigra Water Oak	Semi-E	50-80’	40-50’	M-R	S	Tolerant of a wide range of soils. Similar to Q. laurifolia. Native.
Quercus phellos Willow Oak	D	70-100’	40-60’	M	S	Will grow in a wide range of soils. Transplants easily.
Quercus virginiana Live Oak	E	40-80’	60-100’	M	S	Adaptable to many soils. Give plenty of room as it will spread with age. Native.

BUFFERYARD

TREES	D/E*	HGT.	SPRD.	GROWTH RATE**	LIGHT***	COMMENTS
Zelkova serrata Japanese Zelkova	D	40-60’	30-40’	M-R	S	Prefers moist soils but is very drought and wind tolerant once established. Good urban tree.

*DECIDUOUS/EVERGREEN

**S-SLOW
M-MODERATE
R-RAPID

***S-SUN
PSH-PART SHADE
SH-SHADE

BUFFERYARD

SHRUBS	D/E*	HGT.	SPRD.	GROWTH RATE**	LIGHT***	COMMENTS
Abelia grandiflora Glossy Abelia	E	6-10’	4-6’	M-R	S-PSH	Best in full sun; tolerates a wide range of conditions.
Cleyera japonica Cleyera	E	10-15’	5-6’	S-M	PSH-SH	Best on east or north exposures. Will not tolerate heat, high light or poorly drained soils.
Elaeagnus pungens Thorny Elaeagnus	E	8-12’	8-10’	M-R	S-PSH	Good under difficult conditions but may require some pruning.
Euonymus japonica Evergreen Euonymus	E	10-12’	4-5’	M-R	S-SH	Very tough, durable and adaptable.
Ilex cornuta ‘Burfordi’ Chinese or Burford Holly	E	10-12’	6-8’	M-R	S-SH	Tolerates a wide range of soils and responds well to mulch, water and light fertilization.
Illicium anisatum Spice Plant	E	10-12’	8-10’	M	S-SPH	Has aromatic foliage.
Juniperus chinensis ‘Hetzi’		8-10’	10-12’	M-R	S	Very tough, durable and tolerant of heat and drought.
‘Pfitzeriana’ Chinese Juniper		6-8’	15-20’	M-R	S	
Ligustrum lucidum	E	20’	5-10’	R	S-SH	All very tough, durable shrubs.
Ligustrum japonicum		6-12’	6-8’	R	S-SH	
Ligustrum sinense Privet		6-8’	4-6’	R	S-SH	
Myrica cerifera Wax Myrtle	E	15-25’	15-20’	M	S-SH	Tolerates a wide range of soils, sun or shade and wet sites. Native to this area.

BUFFERYARD

SHRUBS	D/E	HGT.	SPRD.	GROWTH RATE**	LIGHT***	COMMENTS
Nerium oleander Oleander	E	6-16’	6-12’	R	S-SH	Blooms best in full sun. All parts of the plant are poisonous if eaten
Osmanthus fortunei Fortune’s Osmanthus	E	15’	5-7’	M	S-PSH	Best in partial shade. Has very fragrant flowers in the fall.
Photinia fraseri Fraser’s Photinia, Red Tips	E	10-12’	6-8’	M-R	S-PSH	Will not tolerate poorly drained sites.
Photinia serrulata Chinese Photinia, Red Tips	E	10-12’	4-5’	M-R	S-SH	Same as Photinia fraseri above.
Pittosporum tobira Pittosporum	E	8-10’	10-12’	M	S-SH	Very tough and durable, heat tolerant.
Rhaphiolepis indica Indian Hawthorne	E	5-7’	4-6’	S-M	S-PSH	Prefers well drained soils. Moderately drought resistant. Best in full sun.

*DECIDUOUS/EVERGREEN

**S-SLOW
M-MODERATE
R-RAPID

***S-SUN
PSH-PART SHADE
SH-SHADE

D. DETENTION/RETENTION FACILITY LANDSCAPING

Landscaping for Storm water Detention/Retention Facilities shall be in accordance with the requirement outlined in Chapter V, Section D, paragraphs 4(b) and 4(g), and Standard Detail SD 15-16 of this chapter.

E. TREE PROTECTION DURING CONSTRUCTION

Measures shall be taken during the construction process to ensure the protection of existing trees which have been designated to remain on the site. Protective measures shall include the requirements as outlined on Standard Details SD 15-08, SD 15-09 and SD 15-15 of this chapter.

LANDSCAPING

STANDARD DETAILS

TABLE OF CONTENTS

DETAIL DESCRIPTION	SD	PAGE
TREE PROTECTION DURING CONSTRUCTION	15-08	6-19
TREE PROTECTION DUJRING CONSTRUCTION	15-09	6-20
TREE PROTECTION DURING CONSTRUCTION	15-15	6-21
STORM WATER FACILITY LANDSCAPING	15-16	6-22
RESIDENTIAL STREET TREE STANDARDS	15-17	6-23

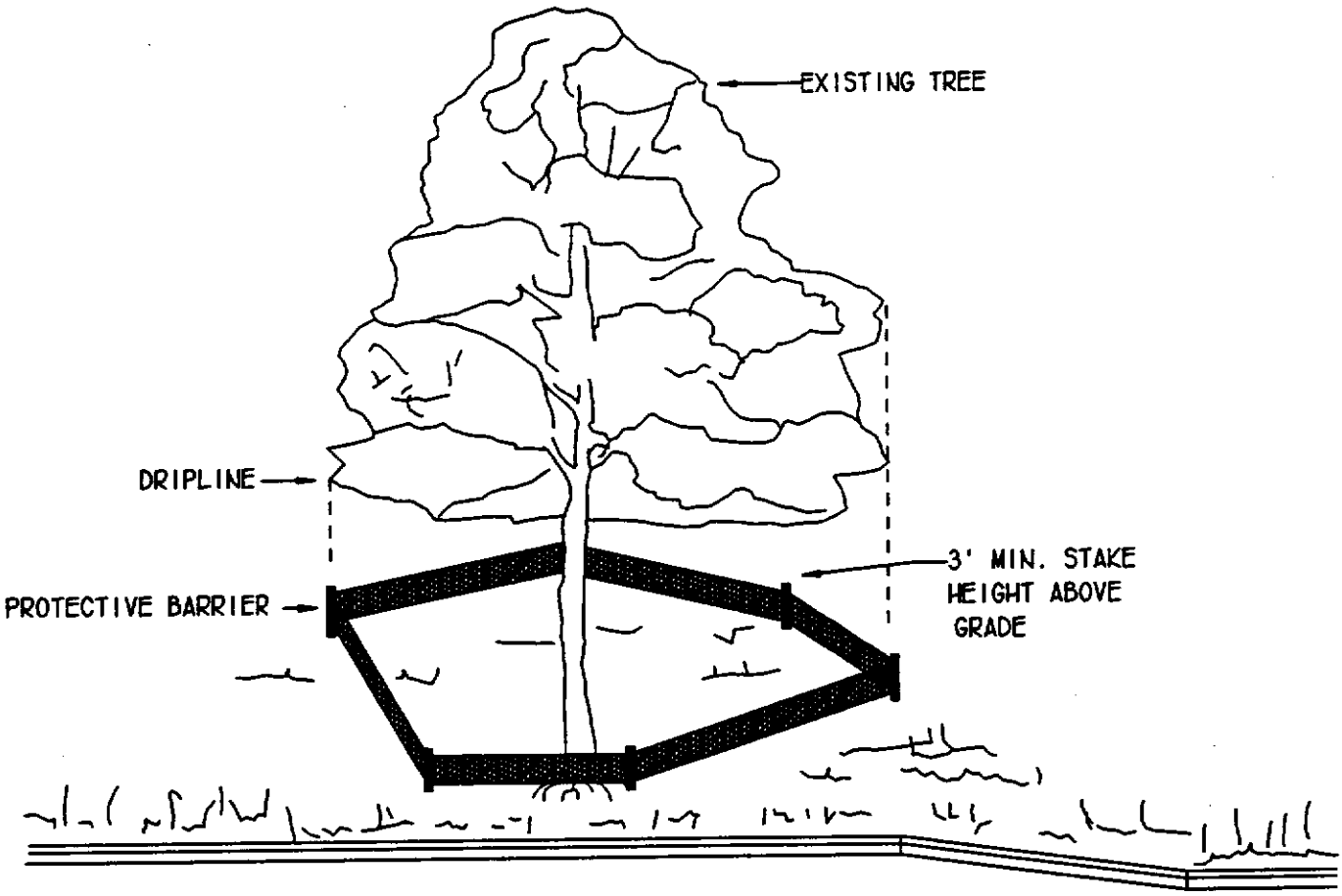

TREES TO BE SAVED WILL BE CLEARLY MARKED PRIOR TO CONSTRUCTION AND A PROTECTIVE BARRIER IS TO BE INSTALLED AT THE DRIPLINE.

DRIP LINE - THE AREA OF SOIL DIRECTLY BENEATH THE TREE EXTENDING OUT TO THE TIPS OF THE OUTERMOST BRANCHES.

DATE: 12-14-92	STANDARD DETAIL	CITY OF WILMINGTON ENGINEERING DEPARTMENT
SCALE: NTS	METHOD OF TREE PROTECTION DURING CONSTRUCTION	
DRAWN BY: GC		
CHECKED BY: JAN		
SD 15-08		SD 15-08

ELEVATION

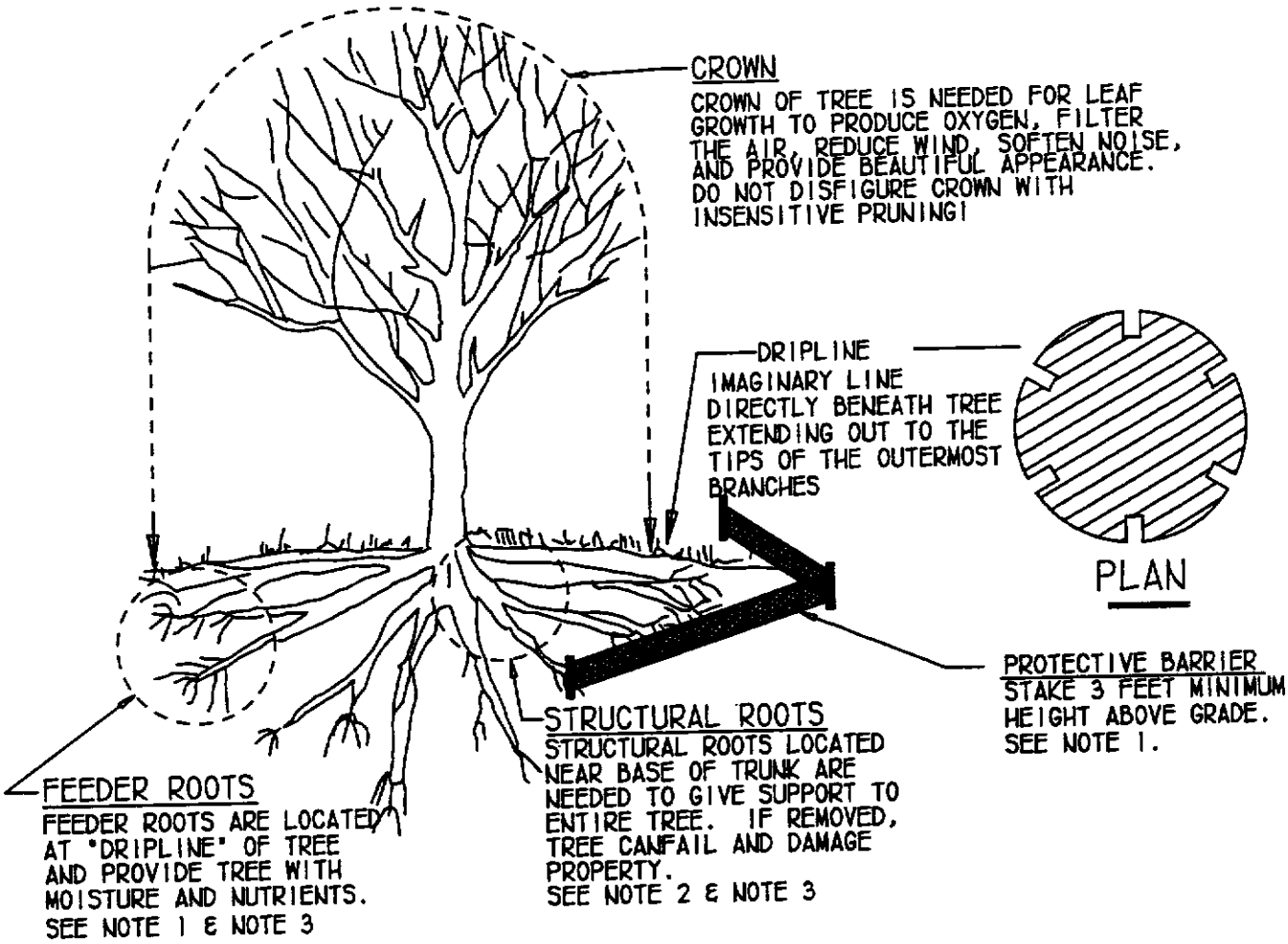

TREE PROTECTION DURING CONSTRUCTION

1. CLEARLY MARK THE TREE TO BE SAVED PRIOR TO CONSTRUCTION AND ERECT A PROCETIVE BARRIER AT THE DRIP LINE. DO NOT COMPACT SOIL BENEATH TREES. NO VEHICLE SHALL BE ALLOWED TO PARK UNDER TREES. NO HEAVY MATERIALS SHALL BE STORED BENEATH TREES. RESULTS OF COMPACTION CAUSE WATER AND AIR NOT TO REACH THE ROOTS AND THE TREE WILL DIE. THESE "FEEDING ROOTS" OCCUR WELL AWAY FROM THE BASE OF THE TREE TO THE EDGE OF THE OVERHEAD BRANCH CANOPY. DAMAGING THE BARK WITH LAWNMOWERS, CONSTRUCTION EQUIPMENT, OR ANYTHING ELSE IS PROHIBITED. THE PROTECTIVE BARRIER SHOULD PREVENT DAMAGE FROM OCCURING DURING CONSTRUCTION.

2. NO CUTTING OF LARGE STRUCTURAL ROOTS LOCATED NEAR THE BASE OF THE TRUNK. REMOVAL OF THESE ROOTS ALONG ONE SIDE IS OFTEN DONE BECAUSE OF A WALK, PAVING OR BUILDING WHICH IS BEING CONSTRUCTED THESE ARE ESSENTIAL IN SUPPORTING THE TREE AND HOLDING IT UPRIGHT IN HIGH WINDS.

3. AVOID CUT AND FILL WITHIN DIAMETER OF TREE CROWN DURING EXCAVATION.

DATE: 5-29-96	STANDARD DETAIL	CITY OF WILMINGTON ENGINEERING DEPARTMENT
SCALE: NTS	METHOD OF TREE PROTECTION DURING CONSTRUCTION	
DRAWN BY: GC		
CHECKED BY: WHW		
SD 15-09		SD 15-09

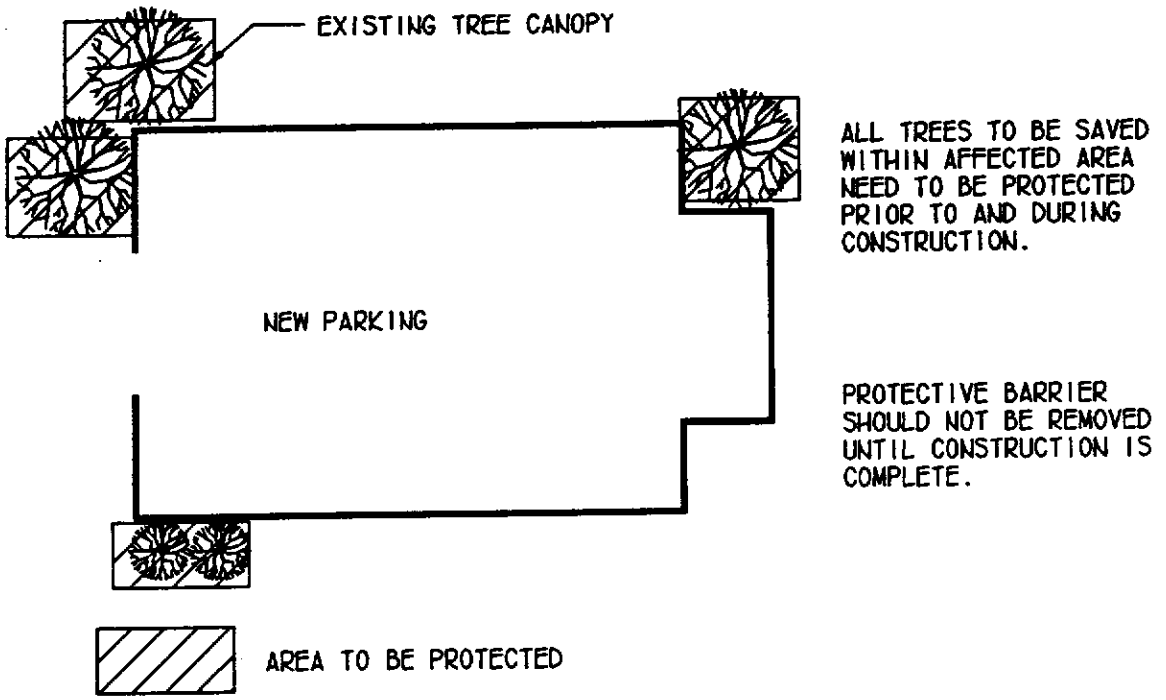

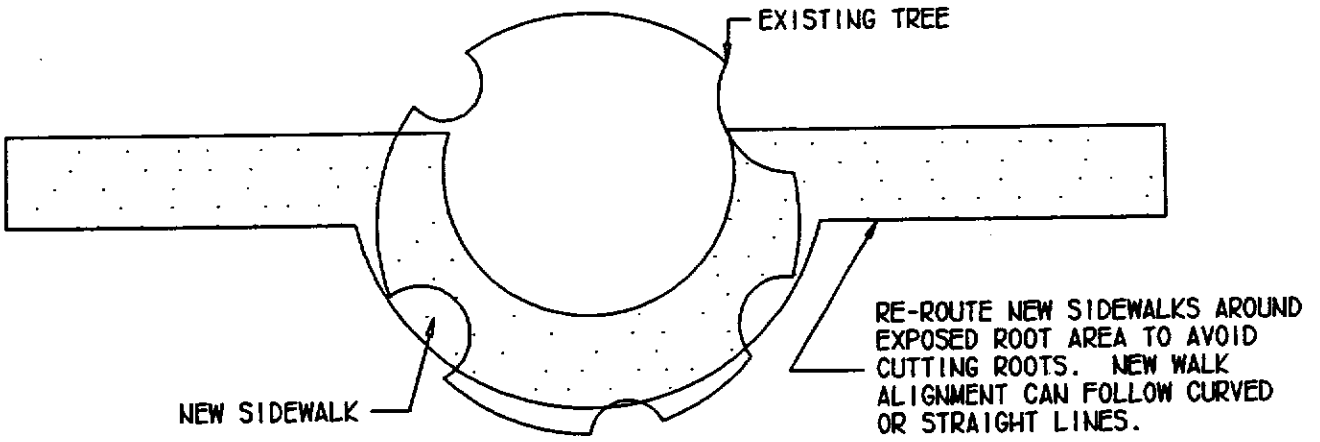

DATE: 5-24-96	STANDARD DETAIL		CITY OF WILMINGTON ENGINEERING DEPARTMENT
SCALE: NTS	EXISTING TREE PROTECTIVE BARRIERS		
DRAWN BY: GC			
CHECKED BY: WHW			
SD 15-15			SD 15-15

TYPICAL STORM WATER FACILITY LANDSCAPING PLAN

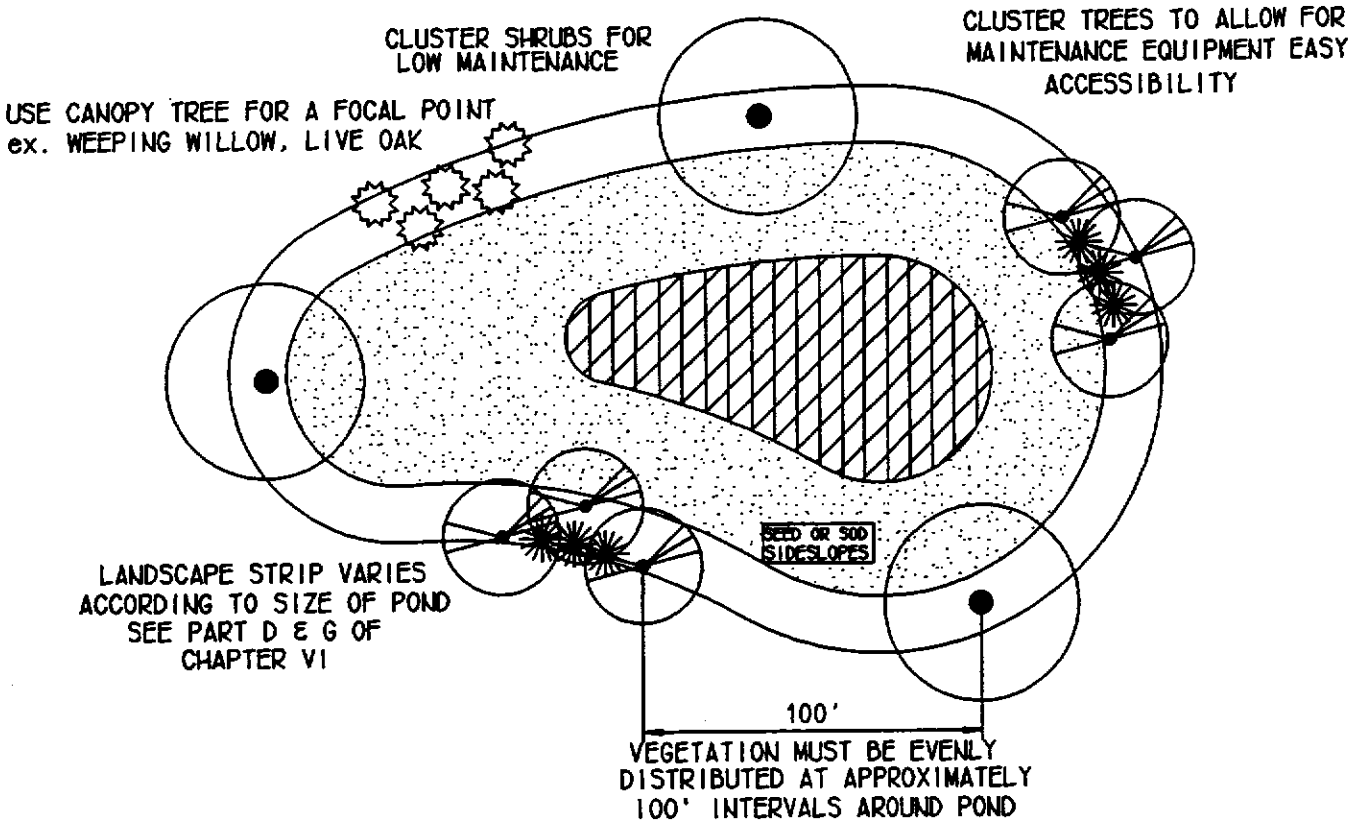

Notes:

1. If possible locate pond where vegetation exists.
2. Suggest minimal clearing to conserve visual quality of site and minimize the additional cost of tree planting. An irregular shape provides a more natural appearance.
3. Landscape strip shall be a maximum slope of 7:1 in order to plant vegetation.
4. Provide a minimum of 3 inches of mulch around all vegetation.

DATE: 5-24-96	STANDARD DETAIL		CITY OF WILMINGTON ENGINEERING DEPARTMENT
SCALE: NTS	TYPICAL STORM WATER FACILITY LANDSCAPING PLAN		
DRAWN BY: GC			
CHECKED BY: WHW			
SD 15-16			SD 15-16

RESIDENTIAL STREET TREE STANDARDS

1. Street Trees shall be installed along residential streets after all driveways have been installed.

2. The developer shall notify Landscape Designer prior to installation to ensure proper tree selection and spacing.

3. Each tree shall be a minimum of two (2) caliper inches.

4. Phasing of a project shall be permitted, however, Street Trees on the same block shall be planted at the same time to avoid size irregularities.

5. Trees within the same block shall be the same species.

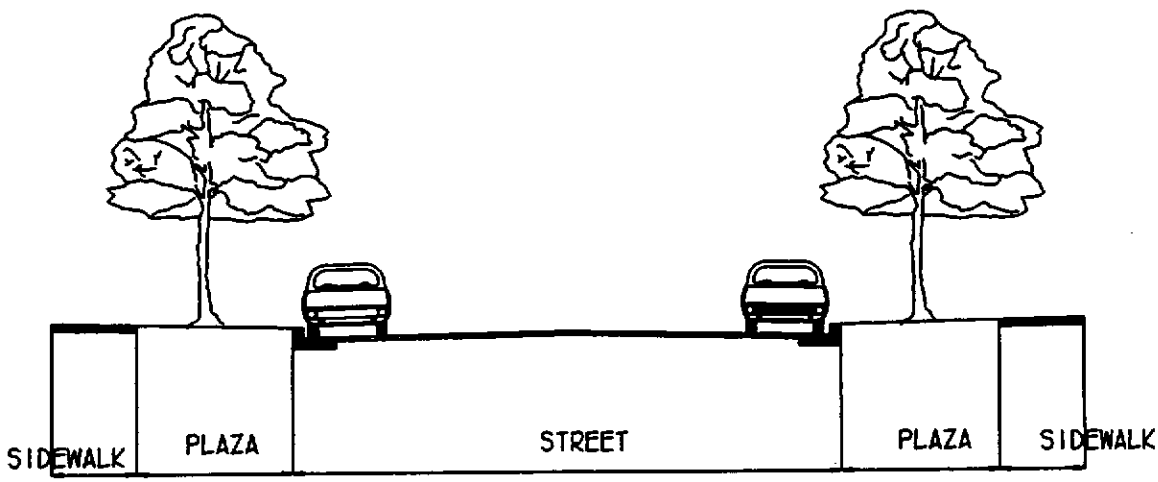

RECOMMENDED STREET TREE SPACING ACCORDING TO PLAZA WIDTHS

4' - 6'	6' - 8'	GREATER THAT 8'
ex. CREPE MYRTLE	ex. JAPANESE MAPLE	ex. DARLINGTON OAK
HOLLY	ZELKOVA	RED MAPLE
25' - 30' SPACING	35' - 40' SPACING	50' SPACING

DATE: 5-24-96	STANDARD DETAIL		CITY OF WILMINGTON ENGINEERING DEPARTMENT
SCALE: NTS	RESIDENTIAL STREET TREE STANDARDS		
DRAWN BY: GC			
CHECKED BY: WHW			
SD 15-17			SD 15-17

VII

TRAFFIC ENGINEERING

TABLE OF CONTENTS

SECTION **PAGE**

A. DEFINITIONS 7-1

B. STREET RIGHT-OF-WAY AND GEOMETRIC DESIGN STANDARDS 7-3

C. DRIVEWAYS 7-8

D. PARKING - ON- STREET 7-16

E. PARKING - OFF-STREET 7-16

F. BICYCLE PARKING 7-20

G. TRAFFIC CONTROL DEVICES 7-20

H. STREET NAME SIGNS 7-21

I. PAVEMENT MARKINGS 7-22

J. STREET LIGHTING 7-22

K. RAILROAD GRADE CROSSINGS 7-23

L. BIKEWAYS 7-23

M. TRAFFIC IMPACT STUDIES 7-23

STANDARD DETAILS 7-28

A. DEFINITIONS

1. Apron, driveway - The paved area of a driveway between the line of the edge or gutter flow line and the near edge of the sidewalk section of the driveway.

2. Bus - The word "bus" refers to every motor vehicle designed to carry more than ten (10) passengers and used for the transportation of persons; and every motor vehicle, other than a taxicab, designed for the transportation of persons for compensation.

3. Bus Stop - The words "bus stop" refer to an area on a roadway parallel to and adjacent to the curb or edge of roadway, or elsewhere, for the use of buses while loading or unloading passengers or during layover periods in their operating schedules.

4. Corner - The word "corner" refers to the point of intersection of the lines of two (2) roadway edges or curb faces extended toward their point of intersection.

5. Curb or Curbing - The words "curb or curbing" refer to a structural element at the edge of an existing or proposed roadway or other way, generally at a higher elevation than the adjacent edge of roadway, installed to deter vehicles and water from leaving the roadway, to otherwise control drainage, to delineate the edge of existing or future roadways or driveways, to present a more finished appearance to the street, or to assist in the orderly development of the roadside.

6. Curb Return - The words "curb return" refer to that curved section of curb which extends from the gutter flow line towards the street property line, sidewalk or sidewalk area.

7. Driveway, Private - The words "private driveway" refer to the area outside a street intended to serve as ingress and/or egress for vehicular traffic between the property lines and an off-street parking area or other area outside the property lines.

8. Driveway, Public - The words "driveway" and "public driveway" refer to the way or area between the roadway of a public street and other property, designed for, or installed, serving as ingress and/or egress for vehicular traffic between such roadway and an off-street parking area or private driveway.

9. Island, Channelization - The words "channelization island" refer to an area, generally between or adjacent to traffic lanes, delineated by curbs, pavement markings or other devices, for control of vehicular movements or for pedestrian refuge.

10. Median - The word “median” refers to a channelization island located, generally, along or near the middle of a street or between two roadways or driveways and which is intended to separate opposite directions of vehicular traffic flow.

11. Parking Area or Parking Facility - The words "parking area" or "parking facility" refer to any area designed, intended or used for the stationing of a vehicle when such vehicle is not in use for transportation.

12. Parking Space, Curb - A portion of roadway where a vehicle can legally park.

13. Parking Space, Off-Street - An area outside of a street, which is designed, intended, and accessible by legal means, for use for the stationing of a motor vehicle.

14. Plaza - The word "plaza" refers to an unpaved area between a sidewalk or sidewalk area and a roadway, along which curbing is in place.

15. Shoulder - The word "shoulder" refers to an unpaved portion of a street, located between a sidewalk or sidewalk area and a roadway, and beside which curbing has not been installed.

16. Sidewalk - The word "sidewalk" refers to a paved portion of a street between the curb or edge of roadway and the adjacent property line except for any portion of same which is designated as a bikeway.

17. Sidewalk Area - The words "sidewalk area" refer to the unpaved area of a public street lying between the property line of said street and a line parallel with and five (5) feet from said property line measured toward the center of the street, and which is reserved for eventual development as a sidewalk.

18. Sidewalk Section - That portion of a driveway between the street property line and the edge of the sidewalk or sidewalk area nearest the roadway.

19 Street - The entire width between property lines of any public alley, avenue, highway, lane, path, road, way, or other public place located within the City, when any part thereof is open to the use of the public, as a matter of right, for purposes of vehicular or pedestrian traffic.

20. Street Segment – A street segment is the length of a street between intersections or between points which define a change in street configuration.

21. Taper, Driveway - The area, generally triangular in shape, by which a public driveway is made wider near the roadway than at the property line, to allow safe unhindered vehicular passage into or out of said driveway.

22. Taxi or Taxicab - The words "taxi" or "taxicab" refer to a licensed public motor vehicle for hire designed and constructed to seat not more than ten (10) persons and operating as a common carrier on call or demand.

23. Taxi Stand - The words "taxi stand" refer to an area in a roadway, adjacent to the curb or edge of roadway, or in another location, set aside for taxicabs to stand or wait for passengers while the driver remains in or at said vehicle.

24. Thoroughfare, Major – Major Thoroughfares are the primary traffic arteries of the city. The Federal-Aid Function Classification is “Arterial”. Their function is to move intracity and intercity through traffic. The streets which comprise the thoroughfare system may serve abutting property, however their major function is to carry traffic. Parking is not normally permitted on major thoroughfares. NOTE: Where this Technical Standards and Specifications Manual refers to “Thoroughfare”, it is generally referring to Major Thoroughfares.

25. Thoroughfare, Minor - Minor Thoroughfares are the larger Collectors. They have the dual role in between the local street (property access) and the major thoroughfares (through traffic).

26. Through-Street - A publicly dedicated, improved and accepted street or street segment which provides at least two means of access to a collector street or street of higher classification.

27. Traffic Engineer - The words "Traffic Engineer" shall refer to the City Traffic Engineer, or his or her designee, for those situations or locations within the jurisdiction of the City of Wilmington and shall refer to the appropriate Traffic Engineering official of the North Carolina Department of Transportation and Highway Safety,, or his or her designee, for those situations or locations within the jurisdiction of the State of North Carolina.

28. Traffic Impact Studies – Transportation impact information required when a new development requires rezoning, a special use permit, or a major development review. Initial requirement of an information sheet estimating trip generation characteristics for a.m. and p.m. peak hours for the development. For trip generations of 100 trips or more during peak hours, an additional requirement of a written traffic impact study.

29. Traffic Lane - The words "traffic lane" refer to a longitudinal section of the roadway or driveway other than a bikeway of a standard width of twelve (12) feet or of a greater or lesser width, down to a minimum width of nine (9) feet intended to accommodate a single file of moving vehicles. Traffic lanes may be delineated by pavement markings or by other devices, or may be unmarked.

27. Wheelstop - A fixed barrier placed in a parking space for the purpose of preventing passage of the vehicle past the inner end of the space and to prevent the vehicle from overhanging the end of the space.

NOTE: The above terms and definitions apply for all chapters of these specifications.

B. STREET RIGHT-OF-WAY, PAVEMENT WIDTH, ALIGNMENT AND GEOMETRIC DESIGN STANDARDS

The minimum standards for Collector Streets, Local Streets, Cul-de-sacs and Alleys in residential areas and subdivisions are shown in Table 1. Design standards for all streets in commercial and industrial areas or subdivisions and all Thoroughfares shall be determined on a case-by-case basis. Some minimum and maximum design standards are given in Table 2.

TABLE 1
MINIMUM STANDARDS FOR NON-ARTERIAL STREETS IN RESIDENTIAL AREAS AND SUBDIVISIONS

		Collector		Local (Residential)		Alley	Private Access Easement
		Non-Residential	Residential	= 50 Units	= 15 Units		
R.O.W.		60’	60’	50’	40’	20’	34’ Easement
Dimensions with Type “A” Curb	**Asphalt (A)**	33’	29’	23’	15’	16’ of asphalt with 1’ header curb and 1’ plaza. Additional easement may be required for utilities	16’ of paved surface plus 10’ for utility and/or stormwater
	Plaza (P)	6’	8’	6’	5’		
	Sidewalk (S)	5’	5’	5’	5’		
Dimensions with Type “D” Curb	**Asphalt (A)**	N/A	N/A	26’	18’		
	Plaza (P)	N/A	N/A	5’	4’		
	Sidewalk (S)	5’	5’	5’	5’		
Dimensions with Type “H” Curb	**Asphalt (A)**	N/A	N/A	24’	16’		
	Plaza (P)	N/A	N/A	6’	5’		
	Sidewalk (S)	5’	5’	5’	5’		

*The number of dwelling units served by a street segment includes all units having frontage on other segments of that street or other streets which contribute to the traffic volume of that segment.

TABLE 2
MINIMUM AND MAXIMUM STREET DESIGN STANDARDS

	Minimum	**Maximum**
Angle of intersection between any two or more streets	75 degrees	
Offset between centerlines of intersections on opposite sides of street (dog-leg)	200 feet (60.96 meters)	
Distance between centerlines of intersections	400 feet (121.91 meters)	1200 feet (371.86 meters)
Right-of-way diameter at end of cul-de-sac	100 feet (30.48 meters)	
Diameter of pavement edge at end of cul-se-sac	80 feet (24.38 meters)	
Radius of transition curve leading into bulb 25 of cul-de-sac (at edge of pavement)	50 feet (15.24 meters)	
Length of cul-de-sac (from curbline of intersecting through street to bottom of bulb or end of roadway)	138 feet (42 meters) (bulb-type)	500 feet (152.4 Meters)
Radius of roadway edge at corners	35 feet (10.67 meters)	
Corner-cut off distance along property lines from their intersection	15 feet (4.57 meters)	
Tangent length between horizontal curves	100 feet (30.48 meters)	
Horizontal centerline radius - local	100 feet (30.48 meters)	
Horizontal centerline radius – collector	200 feet (60.96 meters)	

GENERAL STANDARDS

1. These standards should be considered minimum standards for normal topographic and development conditions. The standards may be increased in circumstances involving special topographic or development conditions (e.g. severe topographic or drainage conditions might require a wider street cross-section in order to ensure reliable access to all lots of a proposed residential subdivision).

2. A public street or streets shall be required to serve any multiple family development which contain 50 or more units or has any principal structure more that 500 feet away from any existing public streets.

3. Ribbon, vertical or slope face curbing or bollards may be required bordering all parking areas and driveways serving multiple family developments.

4. Minimum cul-de-sac pavement radii shall be 40', with a minimum 42' radius required for cul-de-sac with landscaped islands (the performance standard for landscaped islands is a SU-30 turning template). The landscaped islands shall be protected with vertical curbing or other approved barrier. For cul-de-sac bulb rights-of-way, the rights-of-way requirement may be reduced to 44' radius (vertical curbing) or a 46' radius (slope face curbing) on Local B streets only; this would provide room for street signs, meter boxes and small public facilities. Sidewalks are not required on the bulb portion of cul-de-sacs.

5. Parking on streets and alleys 18' or less in width is prohibited.

6. Street trees shall be provided by developers in the plazas of public rights-of-way (except alleys); root shields may be required to be installed along with the street trees to prevent the problems associated with tree roots (e.g. pavement or sidewalk movement, penetration of sewer lines, etc.). Any vegetation planted in public rights-of-way shall be subject to the review Parks, Recreation, and Downtown Services Department and other appropriate staff terms of species, minimum size and quantity.

7. A non-municipal utility easement of 10' in width shall be provided on both sides of all public streets and alleys for installation of electric, gas, telephone and cable TV lines.

8. Inverted crown design for alleys and private access easements shall be utilized due to the curbing (ribbon curbing) permitted for these two street classes in order to provide adequate drainage.

9. When a multi-family or commercial development is utilizing public streets, the street yard landscaping begins after the non-municipal utility easement.

10 When subdivisions interconnect via collector streets, the first approved subdivision will provide the collector street standard which must be maintained until a logical terminus (e.g. intersection).

11. Pavement width requirements are based on the "drivable" area of the roadway. When slope face curbing is used, therefore, the minimum pavement width should be increased by 3'.

12. One-way street and alley standards:
    - One lane, one-way street: 13' face-to-face without parking; 21' face-to-face with parking on one side.
    - One way alley – 13 feet (includes header curb)(Two way alley is 16 feet of pavement with 1 food ribbon curb on both sides)

13. Median standards:
    -Vertical curbing is required to protect median function and landscaping.
    -For local streets: minimum median width - 10' face-to-face.
    -For collector streets: minimum median width - 13' face-to-face, to provide for possible left turns, access cuts, etc.
    -Medians are reserved for landscaping only; no decorative structures, non-traffic signs, etc. are permitted.
    -Sight distance triangle standards apply based on a case-by-case review using ASHTO stopping distance information for the rated speed of the street.
    -Minimum length of medians shall be 100 feet
    NOTE: Traffic calming features may vary from these standards and must be reviewed and approved by appropriate City staff on a case-by-case basis.

14. Collector "B" streets, which serve 150 or more units, shall have their minimum pavement width increased in accordance with NCDOT standards to provide for bike lanes, however, when bike paths/facilities are located and constructed as separate facilities the extra street width is not required.

15. Maximum allowable grade on any street and all commercial and multi-family ingress and egress is 7%.

16. Design standards for Thoroughfares are usually determined by the State and/or Federal governments. City design standards for Thoroughfares will be developed on a case-by-case basis as needed. These standards also apply to new lanes added to existing facilities.

17. Street widths in commercial and industrial subdivisions or areas shall have a minimum right-of-way width of 60 feet and a minimum pavement width of 33 feet.

18. Slope curb is not allowed in commercial and industrial subdivisions or areas.

19. The number of dwelling units served by a street segment includes all units having frontage on other segments of that street or other streets which contribute to the traffic volume of that segment.

20. When more than one route of access is available to a dwelling unit, that unit shall be counted as served by the street segments most likely to provide the primary access point for that unit determined by likely logical driving behavior.

C. DRIVEWAYS

1. General Driveway Requirements: Driveways shall be constructed in accordance with Chapter II, Section E, Paragraphs 3 and 4 and the following requirements, tables, and Standard Details SD 8-01 through SD 8-07 of this chapter.

a. Submission of Plans; information required.

1. No driveway permit shall be issued for other than single-family or two-family residences until there is filed with the City Engineer for his approval a minimum of two copies of plans showing the location and dimensions of all proposed improvements. The scale of plans shall be a standard engineering scale no smaller than 1" = 40'. Such plans may be required for single and two-family residences if deemed necessary by the City Engineer.

2. Information that must be shown on plans submitted shall include:

1) Location of property, including a vicinity map
2) The present and proposed property use
3) Location of all existing and proposed buildings
4) Pavement and right-of-way width
5) For all buildings except single-family and two-family residential buildings the location of off-street loading and unloading facilities
6) Interior parking arrangements and traffic circulation patterns
7) Retaining walls, drainage, poles, hydrants and other physical features which affect the driveway location
8) Location of all existing driveways serving abutting property and those on the opposite side of the street(s)
9) Curb usage, i.e., bus stops, loading zones, parking types, traffic lanes, etc.
10) Wheelstops and other traffic barriers
11) Any intersecting street(s) within 250 feet of any perimeter property line and all traffic signals within 500 feet
12) Proposed driveway centerline elevations at the curbline, property line and at points twenty-six (26) feet and fifty-two (52) feet behind the property line.

b. Driveways shall conform to the dimensions and requirements contained in Tables 3, 4 and 5.

TABLE 3
DRIVEWAY WIDTHS AT PROPERTY LINE

TYPE OF USE	MINIMUM	MAXIMUM
1 or 2 Family Residential – Local	9 ft	20 ft
Collectors	10 ft	20 ft
Other		
One-way Traffic	13 ft.	30 ft., 2-lane
		36 ft., 3-lane
Two-way Traffic	23 ft.	30 ft., 2-lane
		36 ft., 3-lane

NOTES:

1. All driveways shall be the standard "ramp" type except where: a) no curb exists in the vicinity of the proposed driveway, a flat slab type shall be installed, and b) a "street" type entrance may be allowed or required by the City Engineer.

2. This table also applies to private driveways as defined in Section A Definitions, of this chapter, with the exception of 1 or 2 family residential.

3. The City Engineer may approve driveway widths up to 50 feet where it is deemed necessary for safe movements of a large number of large vehicles. A pavement marking plan shall be required for all driveways greater than 30 feet in width.

4. Properties within the City's Historic District may be exempt from these standards as provided by section 19-45 of the City Code.

TABLE 4
DRIVEWAY TAPER WIDTHS AND MINIMUM SIDE PROPERTY LINE OFFSETS

Type of Use	Right Turn Into Driveway			Right Turn Out of Driveway		
	TAPER WIDTH (feet) (a)		Property Line	TAPER WIDTH (feet) (a)		Property Line
	Minimum	Maximum	Offset (ft) (b)	Minimum	Maximum	Offset (ft) (b)
1 or 2 Family Residential	5	13	0	3	13	2
Other						
Two-way Street						
Two-way Driveway	13	c	6.5	13	c	6.5
One-way Driveway						
Entrance	13	c	6.5	3	13	16.5
Exit	3	13	16.5	13	c	6.5
One-way Street-Right Side						
Two-way Driveway	13	c	6.5	13	c	6.5
One-way Driveway						
Entrance	13	c	6.5	3	3	16.5
Exit	3	3	16.5	13	c	6.5
One-way Street-Left Side						
Two-way Driveway	3	13	16.5	3	13	16.5
One-way Driveway						
Entrance	3	3	16.5	13	c	6.5
Exit	13	c	6.5	3	3	16.5

a. See SD-8-02 for location of measurements.
b. Measured at the curb line or edge of roadway, parallel to the edge of pavement.
c. This distance may equal the perpendicular distance between the back of the curb (or edge of pavement) and the edge of sidewalk (or sidewalk area) nearest the roadway, provided that this distance is greater than thirteen (13) feet.

NOTES:

1. The maximum width of the driveway at the gutter flow line measured between the points where the curb returns or driveway apron meets the curb line or edge of roadway is sixty-two (62) feet.
2. If a single driveway is allowed to serve two adjacent residences, the property line offsets may be waived by the City Engineer and the construction, maintenance and closure costs shall be a joint responsibility of each adjacent property owner.
3. If special conditions warrant, the City Engineer may modify widths and geometric requirements on a case by case basis.

TABLE 5
MINIMUM DISTANCE BETWEENTWO OR MORE DRIVEWAYS FROM A SINGLE ESTABLISHMENT OR RESIDENCE ALONG THE SAME STREET

Number	Distance between curb returns or driveway aprons at curb line or Edge of Roadway
2	20 feet
3	59 feet
4 or more	Not allowed except with permission of City Engineer

NOTES:

1. In no case may the total width of all driveways for any individual property exceed fifty (50) percent of the total property frontage along the same street, measured along the property line. See SD 8-07 of this chapter.

2. The sidewalk section shall be constructed at the grade established or approved by the City Engineer.

3. The centerline of driveways shall be at right angles to the roadway or curb. Where special conditions warrant, an acute angle may be used with the approval of the City Engineer.

4. Where special pedestrian or vehicular hazards may be encountered, public and private driveways may be restricted by the City Engineer to a one-way operation. Standard ONE WAY and DO NOT ENTER traffic signs shall be installed per MUTCD standards and maintained in a standard manner on the property by the person or persons having control of such property, giving notice of such restrictions.

5. No driveway shall be permitted to conflict with any municipal facility such as traffic signals, catch basins, fire hydrants, crosswalks, loading zones, bus stops, utility poles, fire-alarm supports, meter boxes and sewer cleanouts or other necessary structures, except with the express approval of the appropriate city officials. Any adjustments to municipal facilities to avoid such conflicts shall be at the expense of the abutting property owner.

6. No driveway curb return or edge of driveway apron at its intersection with the roadway shall be allowed within twenty-six (26) feet of the point of intersection of the street property lines at an intersection or street corner, as measured along the curb line or edge of roadway. See SD 8-07 of this chapter.

7. Two one-way driveways separated by a minimum of a ten (10) foot median may be allowed as one driveway. Property line offset requirements shall apply to each one-way driveway. The minimum distance between driveways shall not apply in that the two one-way driveways will be viewed as a single drive. The City Engineer has the authority to deny the use of two one-way driveways if in the opinion of staff it creates an unsafe situation.

8. Driveways and private streets shall comply with the vision clearance (sight distance triangles) requirements of Section 19-70 of the Wilmington City Code. In accordance with the City Code, sight distances along thoroughfares must be calculated in compliance with the American Association of State Highway and Transportation Officials requirements.

2. <u>Requirements for Major Thoroughfares</u>

a. The following requirements apply to the major thoroughfares or portions of major thoroughfares designated by City Council and listed below in the Schedule of Major Thoroughfares designed for Supplemental Design Specifications. A copy of this schedule is on file in the office of the City Clerk. These requirements apply to all driveways constructed in the right-of-way along the major thoroughfare, and all driveways along the intersecting side streets originating from corner lots with frontage on the major thoroughfare. The requirements become effective on the date of designation by City Council.

<u>SCHEDULE OF THOROUGHFARE SEGMENTS</u>

- Burnett Boulevard from Carolina Beach Road to Myers Street.
- Burnett Boulevard from Virginia Avenue to Shipyard Boulevard.
- Carolina Beach Road from Burnett Boulevard to south City limits.
- College Road from north City limits to south City limits.
- Dawson Street from Third Street to Wrightsville Avenue.
- Eastwood Road from Smith Creek Parkway to east City limits.
- Front Street from Queen Street to Burnett Boulevard.
- Gordan Road from Military Cutoff Road to north City Limits.
- Holly Tree Road from South College Road in its entirety.
- Independence Boulevard in its entirety.
- Kerr Avenue from north City limits to Peachtree Avenue.
- Market Street from 23rd Street to east City limits at Military Cutoff Road.
- Martin Luther King, Jr. Parkway in its entirety.
- Masonboro Loop Road from Pine Grove Road to south City Limits.
- Military Cutoff Road in its entirety.

- New Centre Drive from Racine Drive northwesterly to its terminus.
- Oleander Drive in its entirety.
- Peachtree Avenue from Kerr Avenue to Pine Grove Drive.
- Pine Grove Drive in its entirety.
- Randall Parkway in its entirety.
- River Road from Shipyard Boulevard to south City limits.
- Seventeenth Street from Princess Place to College Road.
- Shipyard Boulevard in its entirety.
- Sixteenth Street from Grace Street to Seventeenth Street.
- Twenty-third Street from Princess Place Drive to north City limits.
- Wooster Street from Eighteenth Street to Third Street.
- Wrightsville Avenue from Castle Street to Eastwood Road.

b. The number of driveways along the major thoroughfare shall be allocated at a rate of one driveway for the first 600 continuous linear feet of frontage, and one driveway for each additional 300 continuous linear feet of frontage or fraction thereof, as measured at the property line.

Frontage required for more than one driveway	Feet
Two driveways	60l
Three driveways	901
Four driveways	1201

c. The location and spacing of driveways shall be as follows:

(1) All driveways for corner lots shall have at the intersecting street property lines, a minimum corner clearance of 230 feet along the major thoroughfares and/or 60 feet along all intersecting side streets not classified herein as a major thoroughfare. All distances are measured along the curb line.

(2) All driveways along the major thoroughfares shall have a property line offset of 75 feet, measured at the curb line, however, driveways shall comply with

(1) above and be at least 230 feet from the intersecting street when the lot has sufficient frontage to meet the requirement.

(3) In cases where more than one driveway is allowed in accordance with subsection 3b above, driveways must be separated by 250 feet, as measured along the curb line.

d. Two one-way driveways may be considered as a single driveway provided that:

(1) The minimum spacing between the two driveway curb returns is 150 feet at the curb line;

(2) The driveways are clearly signed and marked as one-way driveways, using pavement arrows and standard traffic signs;

(3) The maximum combined pavement width of both driveways at the street property line is 40 feet and the minimum width of a single driveway is 13 feet; and

(4) All other requirements of this provision are met.

e. For parcels, tracts, or developments that have previously met the requirements of this section, any re-subdivision of such property, for sale or for lease, shall necessitate a re-assessment of the number and location of driveways for the entire parcel, tract, or development based on the new frontage measurements prior to the issuance of additional driveway permits. Any existing driveways found to be nonconforming based on these requirements shall be removed or relocated at the property owner's expense prior to the issuance of a permit for a new driveway.

f. Any parcel of record on the effective date of this section that has been prohibited all vehicular access based on the requirements outlined above, shall be allowed one access point, the location and design of which shall be determined on a case-by-case basis. Lots created between March 17, 1987 and May 15, 1990, which were prohibited access under the provisions of Chapter VII, Section C.3. will not be allowed access under this provision. Lots combined prior to the effective date of revisions to this section become subject to all provisions of this section on the date of City Council's resolution.

g. An exception to the allocation of driveways in Section 3.b. above, property line offset requirements in Section 3.c.(2) above and separation requirements in Section 3.c.(3) above may be allowed on a case-by-cased basis for delivery entrances and exits which: a) serve only delivery areas and not the main parking area, b) are one way or two way with truck turn around provided, and c) are signed for delivery vehicles only. The property line offset shall not be less than 6.5 feet under this exception.

h. **Interconnectivity of Parking Lots**: Interconnectivity of parking lots between adjoining businesses is encouraged, thereby reducing the number of times vehicles must enter or exit thoroughfares. Properties subdivided under the City's regulations that have been in effect since March 17, 1987, or as the regulations have been modified since that date, are encouraged to provide additional interconnectivity. The number of driveways will continue to be limited based on the frontage of the property prior to the subdivision.

For tracts with 600 feet of frontage or less previously subdivided or developed along major thoroughfares prior to being subject to the driveway regulations as adopted or modified since March 17, 1987 and being owned and developed or redeveloped by different entities, interconnectivity is strongly encouraged. In addition it is strongly encouraged that driveways be shared (i.e. installed centered or near the joint property line and used by two {2} or more lots). Lots/tracts being developed or redeveloped will be limited to a maximum of one driveway per lot and will not be denied their one permitted driveway for providing interconnectivity.

3. Added Lanes and Tapers

Turn lanes and tapers, or acceleration and deceleration lanes may be required where it is anticipated by the City that the volume of traffic using the proposed driveway(s) may significantly interfere with the flow of traffic on the abutting public street. These turn lanes shall have a minimum of 150 feet of storage for left turning movements and 100 feet of storage for right turning movements. The length of taper shall be determined using the formula WS/3 where W is the width of lateral shift (width of turn bay) in feet and S is the posted speed limit in miles per hour. Where necessary, additional side clearances to accommodate such turn lanes and tapers may also be required. When widening of the roadway is required for the addition of turn bays, NCDOT's geometric guidelines for turn lanes shall be followed.

Requests for turn (deceleration) lanes and transition tapers shall be considered as part of the driveway permit and must be shown on the site plan with the driveway.

The cost of turn lanes, turn tapers, and deceleration lanes required in conjunction with a driveway permit shall be paid for by the developer. Property owners shall not be entitled to any claims or reimbursement for the expenditures involved in such construction on public right-of-way. All construction improvements located within public right-of-way shall be built to City standards and shall become public.

4. Private Driveways

Lengths of private driveways shall be as follows:

a. If the private driveway accesses a through street, as defined in Section A - Definitions, of this chapter the total length shall not exceed five hundred (500) linear feet.

b. If the private driveway does not access a through street, the combination of the public street(s) and private driveway(s) shall not exceed eight-hundred (800) linear feet.

c. Lengths are measured from the curbline of the intersecting through street to the bottom of the cul-de-sac bulb, or end of roadway, to the furthermost end of the parking lot or area which the private driveway serves.

D. PARKING - ON-STREET

Standards for the design of on-street parking spaces on new streets shall be as follows:

The recommended minimum and standard width of parking lane, measured from the face of curb shall be eight (8) feet. This width may be narrowed by one (1) foot when, in the opinion of the Subdivision Review Board, the public safety and convenience will be adequately served. A wider lane may be permitted to provide more clearance for passing traffic and to allow for later conversion to moving-lane usage. Typical lane configurations which include parking are shown in Table 1.

The standard length of an on-street parking space is twenty-three (23) feet, measured parallel with the edge of roadway.

Parking at an angle other than parallel with the edge of roadway will not be allowed unless such angle parking is designated and required by an appropriate ordinance.

E. PARKING - OFF-STREET

Standards for the design of off-street parking facilities shall be as follows:

1. Parking facilities accommodating five (5) or more vehicles

a. **Minimum Parking Space Size**:

(1) Each parking space for standard vehicle shall have a minimum width of eight and one-half (8.5) feet and a minimum length of eighteen (18) feet.

(2) Each parking space for a small automobile shall have a minimum width of eight (8) feet and a minimum length of sixteen (16) feet. NOTE: These spaces are restricted to specific uses per Zoning section of the City Code.

(3) Parking facilities accommodating less than five (5) vehicles - minimum dimensions of off-street parking spaces shall be nine (9) feet in width by nineteen (19) feet in length. The end of each parking space adjacent to a pedestrian walkway, public street right-of-way, circulation aisle, driveway, or planting area shall have an approved wheelstop installed at a minimum distance of thirty-six and four tenths (36.4) inches from the end of the stall to limit vehicle overhang. Any parking facility located adjacent to a public

street shall have a suitable barrier installed therein to prevent any part of any vehicle from crossing the right-of-way line. Such passage shall be limited to properly designed and approved driveways.

b. <u>Pavement Specifications</u>

The minimum construction specifications for required parking areas shall conform to the following

(1) Concrete - if cement concrete is used for pavement, the minimum thickness shall be six (6) inches for all uses.

(2) Bituminous - if bituminous mix is used for pavement, the minimum thickness shall be four (4) inch compacted crushed stone base with a two (2) inch I-2 asphaltic concrete surface for all uses

(3) Washed Stone - For parking facilities with at least five stalls and not more than 24 stalls, the following standards are acceptable:

a) A base preparation of a one-inch grid base reinforcement shall cover a non-woven, permeable fabric. Over the grid reinforcement a washed stone shall be placed at a uniform, minimum depth of six (6) inches. The following is a list of materials that have been approved for this purpose;

Grid Reinforcement - Tensar Geogrid or equal;
Non-Woven, Porous Fabric - Trevira Spunbond Type 11 products or equal;
Washed Stone - #67 granite, #57 gravel, #32 gravel, or #57 limestone.

b) A barrier consisting of pressure-treated lumber, extruded curbing, or an approved substitute must be anchored to a minimum depth of twenty-four (24) inches around the entire perimeter of the parking facility, excluding driveways and pedestrian walkways. The anchors must be placed a maximum of five (5) feet apart, as measured on center. The top of the perimeter barrier must extend a minimum of four (4) inches above the surface of washed stone.

c) For all unpaved parking facilities, stalls shall be delineated by wheelstops. Wheelstops shall be anchored to the subgrade to a minimum depth of twenty-four (24) inches and extend to a minimum height of four (4) inches above the surface of washed stone.

d) Drainage attributable to all unpaved parking facilities shall be kept on-site, and shall not be allowed to flow onto adjacent properties or rights-of-way. A trench will be required at the lowest point of the slope of the parking facility. See Standard Detail 15-10 of this chapter.

(4) Subgrade - Preparation of subgrade for concrete, bituminous pavement, or crushed stone shall be in accordance with Chapter II, Section B, Paragraph 6, Subparagraph (a) as contained herein.

c. <u>Pavement Markings</u>

All paved parking lots designed to hold five (5) or more parking spaces shall have parking spaces delineated by the installation of pavement markings. The marking of traffic lanes, circulation aisles, prohibited parking zones, special parking spaces, and other features may also be required. All markings shall be in accordance with the Manual of Uniform Traffic Control Devices or as otherwise approved by the City Traffic Engineer. The City Traffic Engineer may from time to time require or approve changes to the parking, circulation layout or traffic control devices in public vehicular areas. All markings, signs, wheelstops and other traffic control devices shall be kept well maintained and in serviceable condition.

d. <u>Design</u>

The following designs are strictly samples of landscaping and design considerations for parking facilities, and should not be regarded as design standards or requirements.

(1) Landscaping - For further information on planting materials and landscaping requirements, refer to Chapter VI - Landscaping.

(2) Parking Facility Design - For further information on off-street parking facility requirements, refer to Table Six (6) and to SD 15-11, 15-12, 15-13 and 15-14 of this chapter. For further information on base course materials and the preparation of sub-base, refer to Chapter II, Section F."

TABLE 6
PARKING STALL DIMENSIONS

A	B	C	D	E	F	G	H	C+D
MINIMUM STANDARD SIZE								
90	8.5	18.0	24.0	8.5	60.0	60.0	36.0	42.0
60	8.5	20.0	i14.0	9.5	j54.0	j50.0	35.5	j34.0
55	8.5	19.5	i13.0	l0.0	j52.0	j45.5	34.4	j32.5
45	8.5	19.0	i13.0	12.0	j51.0	j42.0	32.3	j32.0
30	8.5	16.5	i13.0	17.0	j46.0	j45.3	25.5	j29.5
0	22.0	8.5	i12.0	18.0	j29.0	j N/A	17.0	j20.5
SMALL VEHICLES (SIGNS REQUIRED: "SMALL VEHICLE PARKING ONLY")								
90	8.0	16.0	24.0	8.0	56.0	56.0	32.0	40.0
60	8.0	17.8	i18.0	9.2	j53.6	j49.6	31.6	j35.8
55	8.0	17.3	i16.7	9.7	j51.3	j45.1	30.6	j34.0
45	8.0	17.0	i13.0	11.3	j47.0	j41.3	28.3	j30.0
30	8.0	14.8	i13.0	16.0	j42.6	j44.5	22.3	j27.8
0	21.0	8.0	i12.0	20.0	j28.0	j28.0	16.0	j20.0
9-FOOT WIDTH								
90	9.0	19.0	24.0	9.0	62.0	62.0	38.0	43.0
60	9.0	21.0	i18.0	10.4	j60.0	j55.5	37.5	j39.0
55	9.0	20.5	i16.7	11.0	j57.7	j50.5	36.3	j37.2
45	9.0	19.8	i13.0	12.7	j52.6	j46.5	33.6	j32.8
30	9.0	17.2	i13.0	17.0	j47.4	j50.3	26.5	j30.2
0	23.0	9.0	i12.0	23.0	j30.0	j30.0	18.0	j21.0

A PARKING ANGLE
B STALL WIDTH
C REAR OF STALL TO FRONT OF STALL
D AISLE WIDTH
E LENGTH ALONG FRONT OF STALL
F CURB TO CURB, DOUBLE-LOADED AISLE
G STALL-END CENTER TO STALL-END CENTER, DOUBLE-LOADED AISLE
H WIDTH OF DOUBLE ROW
I PER TRAFFIC LANE
J FOR ONE-WAY TRAFFIC ONLY

NOTES:
1) This table represents minimum and common alternative parking lot design standards.
2) Angle in degrees
3) Dimensions in feet

F. BICYCLE PARKING

Where Bicycle Parking is provided under Section 19-43, Paragraph (f) of the City Zoning Ordinance, the following standards shall apply:

a. Construction

When a bicycle parking facility is adjacent to motor vehicle parking, the surface and subgrade construction shall be the same as that for the adjacent motor vehicle parking.

b. Bicycle Parking Mechanisms

All bicycle parking facilities should accommodate a minimum of four (4) bicycles per 150 square feet. Mechanisms for securing the bicycles in place should consist of a standard rack anchored into the subgrade.

G. TRAFFIC CONTROL DEVICES

In order to provide the motoring public with uniform design and meaning of traffic signs, signals and markings, all traffic control devices installed in new subdivisions and other areas open to public access shall conform to accepted standards of uniformity. New "STOP" signs on streets to be dedicated as public are to be installed by City crews. (Other required traffic control devices are to be installed at the expense of the developer/contractor. In certain instances City crews may install these after payment has been made to the City.) The standards to be used as guides are:

1. The Manual on Uniform Traffic Control Devices for Streets and Highways, (MUTCD) published by the U.S. Department of Transportation, Federal Highway Administration, Washington, D.C., latest edition, and all errata and same source supplements thereto, and official interpretations thereof.

2. "North Carolina Sign Supplement to the MUTCD," Traffic Engineering Branch, Division of Highways, NCDOT, latest edition.

3. "Standard Highway Signs as Specified in the MUTCD ." USDOT, FHWA, latest edition.

4. Any other published or non-published guidelines or regulations of City, State, and Federal agencies dealing with such matters.

5. Roadway Standard Drawings, Highway Design Branch, Division of Highways, NCDOT, latest edition.

Any guidelines may be revised or amended when, in the opinion of appropriate officials, including the Subdivision Review Board, the public would be better served by such revisions.

NOTE: Parking Lot Markings – Parking lot markings shall be required. However, in that the manuals are designed for traffic traveling along roads, the dimensions of the pavement markings only can be reduced. The pavement markings are to be to true

proportions of the design manuals, but may be reduced in size by up to a maximum of fifty percent (50%).

H. STREET NAME SIGNS

Street name signs shall be constructed to the following specifications:

1. Post:

a. Galvanized u-channel:
b. Twelve (12) feet in length, minimum if not set in concrete:
c. Two and three-eighths (2-3/8) inches outside diameter, three (3) pounds per foot in weight.
d. Bottom of sign shall be a minimum of seven (7) feet above. ground.
e. When required by City Traffic Engineer the post must be anchored at ground level with three (3) angle bars driven into ground and connected to post with special bolted connecting ring.

2. Sign Blanks:.

a. Extruded flange-reinforced-edge aluminum blades.
b. Minimum of twenty-four (24) inches in length and six (6) inches in height. For intersections with a major thoroughfare, a minimum nin (9) inch height blade is required.
c. Twenty-five hundredths (0.250) inches thick at flanges.
d. Ninety-one hundredths (0.091) inches thick at center of blade.
e. Two (2) seven-sixteenths (7/16) inch holes in top flange end. Two (2) seven-sixteenths (7/16) inch holes in bottom flange. Each hole being one and three-fourths (1-3/4) inches from the vertical centerline of the blade and with their centers seven sixteenth (7/16) inch from the extreme top or bottom edge of the blade.

3. Hardware

a. Standard approved vandal-proof caps and crosses with recessed head attachment bolts and set-screws.

4. Lettering

a. All block capitals;
b. Name of street four (4) inches in height for six (6) inch blades, six (6) inches in height for nine (9) inch blades;
c. Prefixes “N” (north), “S” (south), etc. two (2) inches in height for six (6) inch blades and three (3) inches in height for the nine (9) inch blades;
d. Suffixes “ST” (street), “AVE” (avenue), “BLVD” (boulevard), etc. two (2) inches in height for six (6) inch blades and three (3) inches in height for the nine (9) inch blades;
e. Block numbers - two (2) inches in height for six (6) inch blades and three (3) inches in height for the nine (9) inch blades;

5. **Color:** Reflective white lettering on reflective green background (may be "reverse-screened").

6. Street name signs at intersections involving at least one public street or street to be dedicated as public are to be installed by City crews. Street name signs for private streets shall have the word "PRIVATE" incorporated thereon in letters at least one (1) inch in height.

I. PAVEMENT MARKINGS

Pavement marking may be required on streets and within parking lots. When pavement markings are required a pavement markings plan shall be developed and submitted to City staff for review. Pavement markings shall conform with the traffic control reference materials referred to in paragraph G. above, except as provided herein.

1. Streets: Pavement markings for streets shall be of thermoplastic materials. The materials and construction process shall be consistent with the Wilmington's contract specifications and/or the NCDOT specifications. The thermoplastic material is not to be applied until the asphalt pavement has been allowed to cure sufficiently to let the volatiles escape from the pavement. Temporary pavement markings of paint may be required in high traffic areas.

2. Parking Lots and other sites: Pavement markings for parking lots and other site development areas may be required. Pavement marking at driveway locations for high traffic generators shall be of thermoplastic material. All other required pavement markings within these areas may be either thermoplastic or approved traffic paint. All pavement marking shall conform to the standards referenced in Paragraph G. above, provided that the City Engineer (or his designee) may approve directional markings to be reduce in size up to a maximum of fifty percent (50%). Markings that are allowed to be reduced in size shall be directly proportional to the full size marking for all dimensions. **All required pavement markings are required to be maintained.** Pavement markings shall not be applied until the pavement has been allowed to cure sufficiently to all the volatiles to escape. Pavement markings that fade or peel because they were applied too early shall be reinstalled.

J. STREET LIGHTING

1. Streetlight Fixtures

The "standard streetlight fixture" shall be a high-pressure sodium vapor, Type III enclosed cutoff fixture that is attached to an arm bracket to a wooden or fiberglass pole and is leased from Progress Energy Carolinas. "Nonstandard streetlight fixture" shall be a high-pressure sodium vapor, Type V or a Type III "shoebox" fixture leased from Progress Energy Carolinas. These fixtures are typically mounted on top of a fourteen-foot (minimum height) post.

2. **General**

a. Street lighting shall be installed in all new major subdivisions.

b. Requests for street lighting shall be submitted with plans that shall show landscaping types and locations.

c. Streetlights should be located at adjoining property lines and at street intersections.

d. Streetlight locations shall be designed to minimize potential hazards to traffic, and obstructions to visibility.

e. Trees shall be planted at a minimum distance from a streetlight equal to one-half the recommended street tree spacing shown on SD 15-17 located in Chapter VI (Landscaping).

3. **Privately-maintained streets**

In subdivisions where the streets are platted as private, the homeowners' association, property owners' association or developer must enter into an agreement with Progress Energy Carolinas to provide street lighting as required under Rate Schedule ALS set forth by the North Carolina Utilities Commission (NCUC).

4. **Nonstandard fixtures along dedicated public streets**

Request for nonstandard street lighting shall be submitted in letterform. The incorporated homeowners' or property owners' association shall enter into an agreement with Progress Energy Carolinas and the City of Wilmington.

K. RAILROAD GRADE CROSSINGS

Highway traffic control devices at all railroad crossings shall conform to the guidelines referenced in Section G of this chapter. Additional requirements of the appropriate railway agencies shall also be considered.`

L. BIKEWAYS

Bikeway design and construction shall be in accordance with North Carolina Department of Transportation Guidelines and Standards, latest revision.

M. TRAFFIC IMPACT STUDIES

The purpose of this policy is to establish a process for evaluating the impact of proposed development projects on the level of service and safety of the transportation system within the City of Wilmington.

1. **Applicability**

Any new development, redevelopment or expansion anticipated to generate more than 100 trips (including pass-by and internal capture trips) during any peak hour period on the surrounding roadways (generally between 7:00-9:00

a.m. and 4:00-6:00 p.m.) upon completion of all or a portion of its sections must complete a traffic impact study. In the case of currently developed property, a net increase of 100 peak hour trips will require the completion of a study. Staff may also require a traffic study for any proposed development within 500 feet of an existing signalized intersection that that operates at a Level of Service E or F. Further, where necessary, the focus of the traffic impact study may be expanded to evaluate issues such as internal circulation, safety and queuing. All traffic studies must be signed and sealed by a Professional Engineer. City staff, the Subdivision Review Board, or City Council may require or waive the requirement for completion of a traffic impact study for any proposed development regardless of size.

2. <u>Pre-submittal Requirements</u>

The firm or individual conducting the study will submit a written scope proposal to City Planning, Traffic Engineering and the North Carolina Department of Transportation (if applicable) to initiate the process. A scope proposal must include:

a. Project name

b. Existing zoning or use

c. Proposed zoning or use

d. Proposed development intensity (Number of units in the case of residential developments, gross floor area in commercial and industrial developments or other appropriate independent variable as determined by City staff)

e. An estimate of the AM and PM peak hour driveway traffic to be generated by the proposed development using the Institute of Transportation Engineers (ITE) Trip Generation Manual (most recent edition), including considerations for internal capture and/or pass-by trips. Estimate of peak hour traffic not using the most recent ITE Trip Generation Manual must identify the source of the information.

f. A study area map, including a list of intersections to be analyzed.

g. A diagram illustrating the distribution of new site trips.

h. Estimated horizon year

i. Background growth rate

j. A legible project location map showing the development (including proposed driveway accesses) and the surrounding area with major and minor thoroughfares at an appropriate scale.

City staff will inform the firm or individual of other site specific issues that need to be addressed by the study and will make available all existing data on traffic operations in the vicinity of the proposed project upon request. City staff will provide the firm or individual with a written approval outlining the final scope of the study.

3. Submission Requirements

Traffic impact studies must be submitted at least four weeks in advance of a scheduled meeting at which the project will be reviewed by the Subdivision Review Board, Planning Commission or City Council. All traffic studies must be accompanied by an application form and appropriate review fee. At minimum, traffic studies must include:

a. Study purpose and objectives

b. Description of site and study area

c. A summary of existing conditions including, but not limited to, surrounding street and key intersection traffic volumes, turning movements, and capacities, safety deficiencies and funded transportation improvements

d. Anticipated or approved developments in the area

e. Trip generation, trip distribution, modal split, and discussion of:

- Source of trip generation rate including the ITE code and assumptions used or data collected for any variations from generally accepted ITE rates or equations
- Pass-by trip factors and assumptions
- Internal capture assumptions for mixed use developments
- Trip distribution and modal split assumptions

f. Projection of future traffic volumes and assessment of future roadway and intersection operating conditions for the year of the ultimate completion of the project. All projections should specifically document projected background traffic as well as the traffic generated by the proposed development. If the project is to be phased, then an assessment of conditions after the completion of each phase of the development is required. If the unphased build-out period of the project is greater than nine years, then a minimum of one intermediate and one full build-out impact assessment is required. All assessments should include the following three scenarios:

- Existing conditions
- No build future year
- Future year build conditions

g. Recommendations for site access and transportation improvements or mitigation measures needed to maintain traffic flow to, from, within and adjacent to the proposed development at an acceptable and safe level of service (generally assumed as LOS D). Any recommendations for travel demand measures, extension of public transportation or roadway improvements should identify funding sources for these improvements.

h. Data collected and travel simulation models for the study will be made available to City staff for evaluation of the study conclusions. The format for data submission, as well as the format for data to be provided by the City, will be determined in through the scoping process.

i. Approved scope

4. Re-submission Requirements

In some cases, changes to site conditions or to the trip generation characteristics of the proposed development will require the re-submittal of a traffic study. The re-submittal fee will apply when an increase in trip generation occurs due to a change initiated by the applicant in building size or land use type. The re-submittal fee will not apply if the change results in a decrease in intensity or trip generation. Studies re-submitted for review must follow the original scope except where approved by City staff. Updating a traffic study that has expired constitutes a new submittal.

5. Approval and Validity

Traffic studies will be approved by City staff in writing and will outline the required improvements associated with the project. Approval of the traffic study will be valid until the year following the analyzed build-out year. For example, if the build-out year analyzed was 2009, the traffic study is valid until the January 1, 2010.

TRAFFIC ENGINEERING

STANDARD DETAILS

TABLE OF CONTENTS

DETAIL DESCRIPTION	SD	PAGE
STREET SECTION TYPE “A” & “D”	1-01	7-30
STREET SECTION-STANDARD	1-02	7-31
STREET SECTION CROWN DATA	1-03	7-32
PAVEMENT WIDENING GUIDELINES	1-04	7-33
MINIMUM STREET WIDTH FOR PARKING	1-06	7-34
CUL-DE-SAC - LOCAL “A” & “B” RESIDENTIAL - OPTION 1	1-10	7-35
CUL-DE-SAC - LOCAL “A” & “B” RESIDENTIAL w/ISLAND OPTION 1	1-11	7-36
CUL-DE-SAC - LOCAL “A” & “B” RESIDENTIAL - OPTION 2	1-12	7-37
CUL-DE-SAC - LOCAL “A” & “B” RESIDENTIAL w/ISLAND OPTION 2	1-13	7-38
60’ X 20’ T-SHAPED TURNAROUND	1-13A	7-39
ALLEY & PRIVATE ACCESS EASEMENT SECTIONS	1-14	7-40
GENERAL DRIVEWAY NOTES	8-07	7-41
DRIVEWAY - TYPE “D” CURB	8-01	7-42
DRIVEWAY - TYPE “A” CURB & GUTTER	8-02	7-43
DRIVEWAY - SLOPE FACE CURB	8-03	7-44
DRIVEWAY - NO CURB RESIDENTIAL	8-05	7-45
DRIVEWAY - TYPE “D” CURB - PLAN VIEW	8-06	7-46
BARRICADE - TYPE III	15-07	7-47
SIGN INSTALLATION LOCATION w/SIGN FOOTINGS	15-03	7-48
SIGN INSTALLATION LOCATION	15-04	7-49
UNPAVED PARKING FACILITY - UNDER 25 STALLS	15-10	7-50
PARKING FACILITY - PAVED OR UNPAVED - UNDER 25 STALLS	15-11	7-51
PARKING FACILITY – UNDER 25 STALLS – SHEET 2	15-11	7-52
PARKING FACILITY - EQUAL TO OR GREATER THAN 25 STALLS	15-12	7-53
PARKING FACILITY – 25 STALLS OR GREATER – SHEET 2	15-12	7-54
PARKING FACILITY - DESIGN NOTES	15-13	7-55
LANDSCAPE NOTES	15-14	7-56
STANDARD DRIVEWAY WITH RIGHT TURN BAY	8-18	7-57
STANDARD DRIVEWAY WITH RIGHT TURN BAY – NO CURB	8-19	7-58
WIDENING OF LEFT TURN LANE	8-20	7-59
STANDARD ONE-WAY DRIVEWAY	8-21	7-60
PAVEMENT MARKINGS – LINE TYPES	11-01	7-61
PAVEMENT MARKINGS – OFFSETS	11-02	7-62
PAVEMENT MARKINGS – ARROW SYMBOLS	11-03	7-63
PAVEMENT MARKINGS – NON-SIGNALIZED INTERSECTIONS	11-04	7-64
PAVEMENT MARKINGS – NON-SIGNALIZED INTERSECTIONS	11-05	7-65
PAVEMENT MARKINGS – SIGNALIZED INTERSECTIONS	11-06	7-66

DETAIL DESCRIPTION	SD	PAGE
PAVEMENT MARKINGS – THRU-LANE DROP AT INTERSECTION	11-07	7-67
PAVEMENT MARKINGS – TURN LANES	11-08	7-68
PAVEMENT MARKINGS – TURN LANES	11-09	7-69
PAVEMENT MARKINGS – RAISED PAVEMENT MARKERS	11-10	7-70
PAVEMENT MARKINGS – WHEELCHAIR RAMPS	11-11	7-71
THERMOPLASTIC PVMT MKGS – 50’ DRIVEWAY (NO LEFT TURNS)	11-12	7-72
THERMOPLASTIC PVMT MKGS – 50’ DRIVEWAY (1 OF 2)	11-13	7-73
THERMOPLASTIC PVMT MKGS – 50’ DRIVEWAY (2 OF 2)	11-13	7-74
PAVEMENT MARKINGS – ROUNDABOUT	11-14	7-75

This page intentionally left blank.

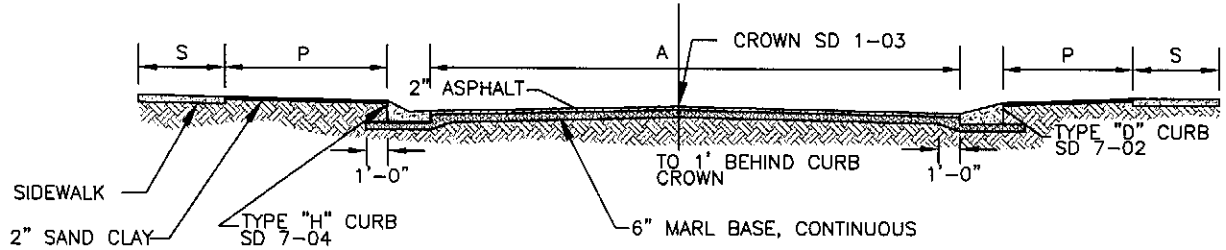

NOTE:

1. Included in the grading for a street is the proper protection of fills and cuts beyond the right-of-way (cut section slope 1.5/1; fill section slope 2:1)

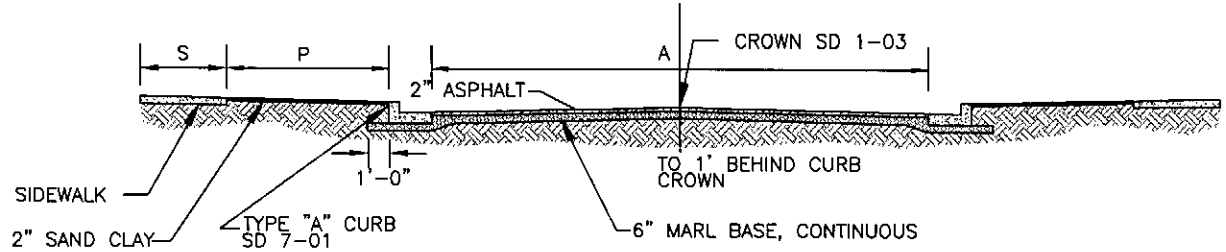

STREET NOTES:

1. Residential collectors may be a minimum of 24' wide from curb face to curb face when a separate bicycle facility is provided.
2. If on-street parking is approved, then add 7' of pavement width per parking lane.
3. Additional width may be required at intersections or major driveways for turn lanes or bays.
4. Pavement markings are required and shall include centerline, bike lanes, and parking lanes, where applicable.
5. Vertical curb (type "A") shall be used on collector streets.

		R-O-W	DIMENSIONS WITH TYPE "A" CURB			DIMENSIONS WITH TYPE "D" CURB			DIMENSIONS WITH TYPE "H" CURB		
			ASPHALT (A)	PLAZA (P)	SIDEWALK (S)	ASPHALT (A)	PLAZA (P)	SIDEWALK (S)	ASPHALT (A)	PLAZA (P)	SIDEWALK (S)
COLLECTOR	NON-RESIDENTIAL	60'	33'	6'	5'	NA	NA	5'	NA	NA	5'
	RESIDENTIAL	60'	29'	8'	5'	NA	NA	5'	NA	NA	5'
LOCAL (RESIDENTIAL)	≤ 50 UNITS	50'	23'	6'	5'	26'	5'	5'	24'	6'	5'
	≤ 15 UNITS	40'	15'	5'	5'	18'	4'	5'	16'	5'	5'
ALLEY		20'	-14' of asphalt with 1' header curb and 1' plaza, additional easement may be required for utilities								
PRIVATE ACCESS EASEMENT		34' EAS.	-16' of paved surface, 10' for utility and/or stormwater								

STANDARD STREET SECTION
SD 1-01

STANDARD DETAIL

STANDARD STREET SECTION

DATE: 2003
DRAWN BY RLB
CHECKED BY W.C.P., P.E.
SCALE NOT TO SCALE

CITY OF WILMINGTON
ENGINEERING OFFICE
305 CHESTNUT STREET
PO. BOX 1810
WILMINGTON N.C. 28402
(910) 341-7807

SD 1-01

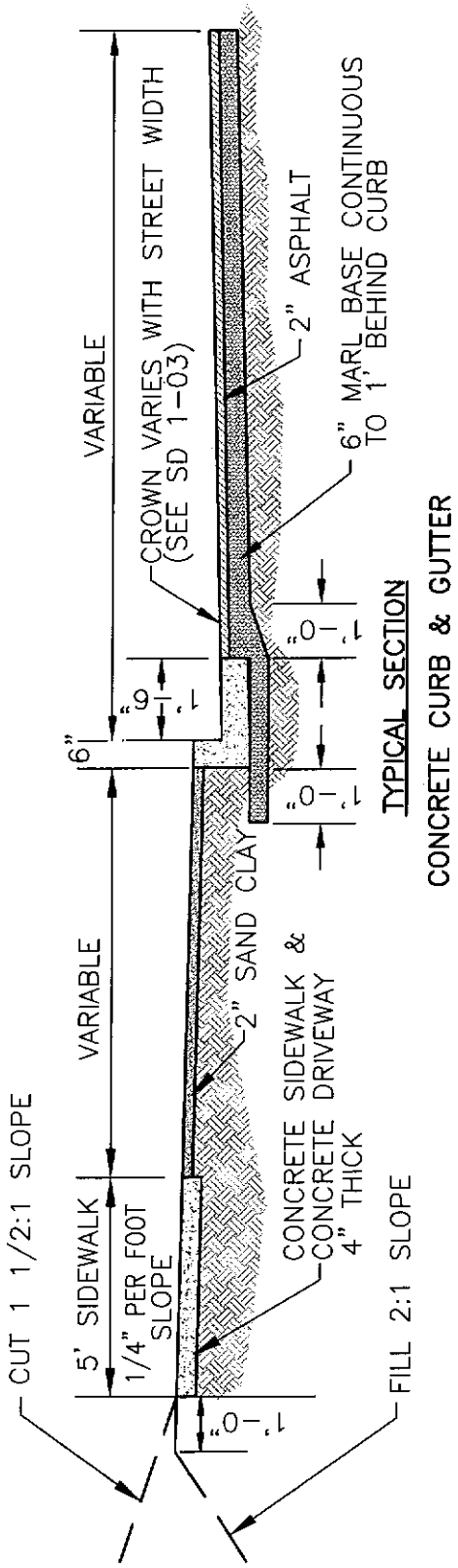

TYPICAL SECTION

CONCRETE CURB & GUTTER

NOTES:

*COMBINED CONCRETE CURB & GUTTER, CONCRETE SIDEWALK AND DRIVEWAYS TO BE 3000 POUNDS STRENGTH CONCRETE.
*SCORE JOINTS TO BE PLACED EVERY 5' ACROSS SIDEWALK, IN SIDEWALK AREA OF DRIVEWAYS.
*EXPANSION JOINTS TO BE PLACED ACROSS SIDEWALK EVERY 30'.
*EXPANSION JOINTS TO BE PLACED BETWEEN: SIDEWALK AND CURB, SIDEWALK AND DRIVEWAY, AND DRIVEWAY AND CURB RETURN WHERE THEY ADJOIN.

STANDARD STREET SECTION

SD 1-02

	STANDARD DETAIL	CITY OF WILMINGTON ENGINEERING OFFICE 305 CHESTNUT STREET PO. BOX 1810 WILMINGTON N.C. 28402 (910) 341-7807
DATE: 2001	STANDARD STREET SECTION	
DRAWN BY JSR/CMR		
CHECKED BY B.P., P.E.		
SCALE NOT TO SCALE		SD 1-02

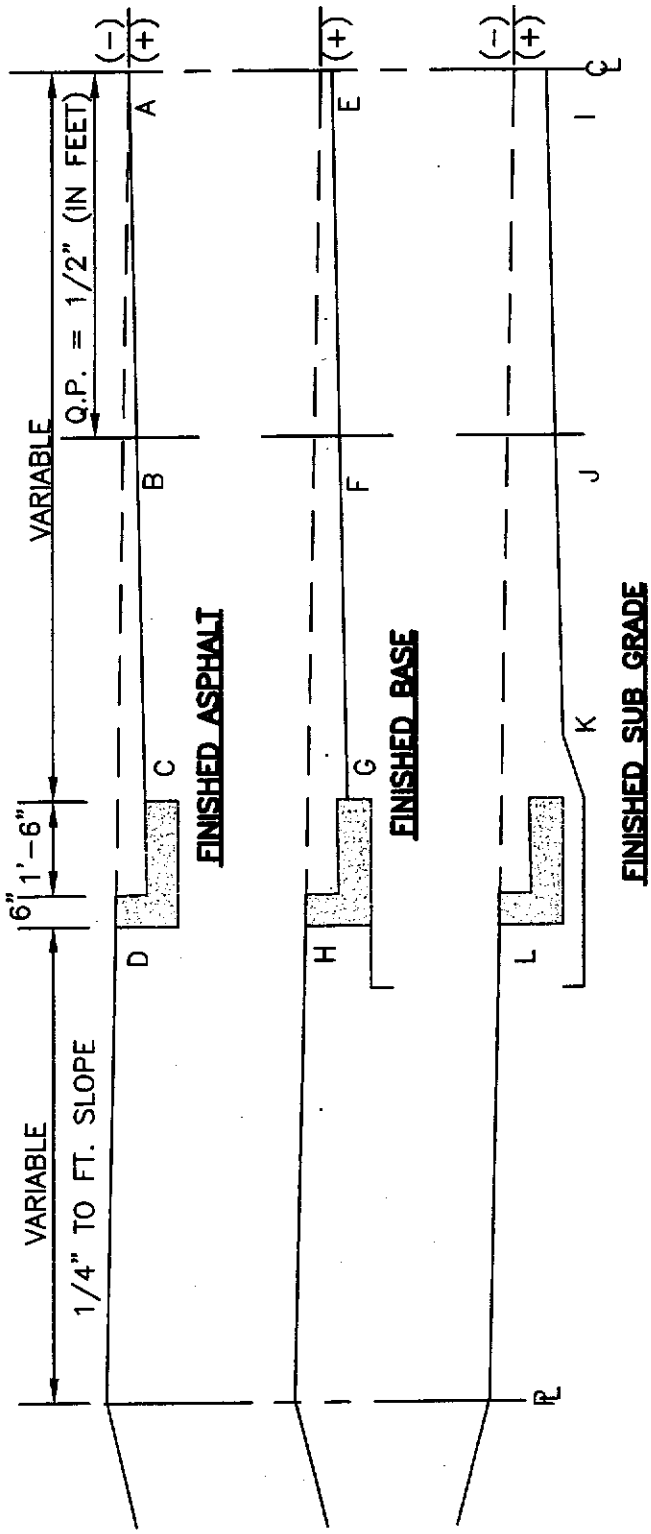

STREET WIDTH	PARABOLIC CROWN (FOOT)	ELEVATION DIFFERENCE (+) = BELOW T. C. (−) = ABOVE T. C.											
		A	B	C	D	E	F	G	H	I	J	K	L
24',27'	0.30'	0.20'	0.26'	0.44'	0.00'	0.37'	0.42'	0.60'	1.00'	0.70'	0.76'	1.27'	1.33'
30',33'	0.42'	0.08'	0.19'	0.44'	0.00'	0.25'	0.35'	0.60'	1.00'	0.58'	0.69'	1.27'	1.33'
36',48'	0.50'	0.00'	0.13'	0.44'	0.00'	0.17'	0.30'	0.60'	1.00'	0.50'	0.63'	1.27'	1.33'

STANDARD DETAIL

DATE: 2001

DRAWN BY JSR/CMR

CHECKED BY B.P., P.E.

SCALE NOT TO SCALE

STANDARD STREET SECTION (CROWN DATA)

CITY OF WILMINGTON
ENGINEERING OFFICE
305 CHESTNUT STREET
PO. BOX 1810
WILMINGTON N.C. 28402
(910) 341-7807

SD 1-03

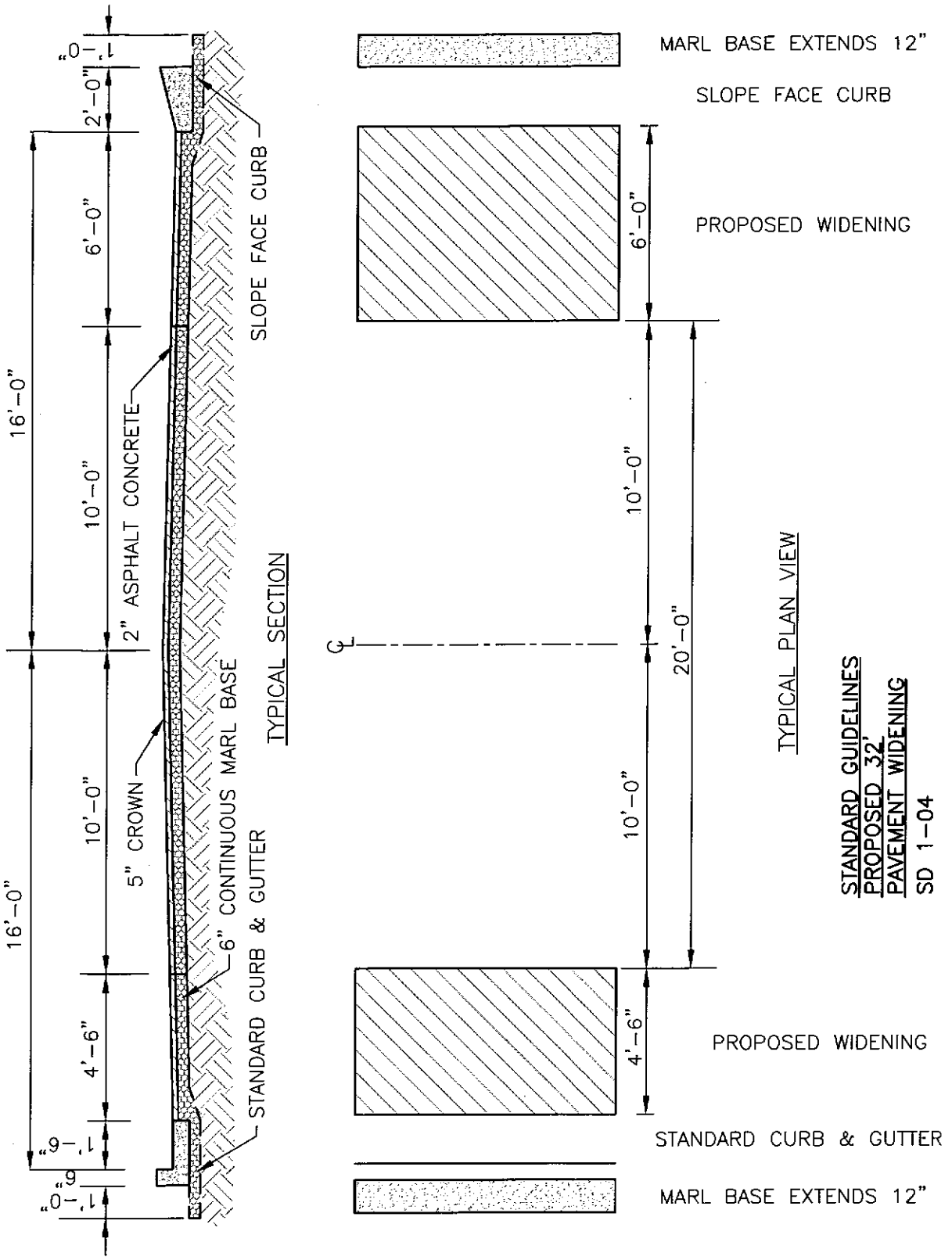

STANDARD GUIDELINES
PROPOSED 32'
PAVEMENT WIDENING
SD 1-04

	STANDARD DETAIL	CITY OF WILMINGTON ENGINEERING OFFICE 305 CHESTNUT STREET PO. BOX 1810 WILMINGTON N.C. 28402 (910) 341-7807
DATE: 2001	STANDARD GUIDELINES PROPOSED 32' PAVEMENT WIDENING	
DRAWN BY JSR/CMR		
CHECKED BY B.P., P.E.		
SCALE NOT TO SCALE		SD 1-04

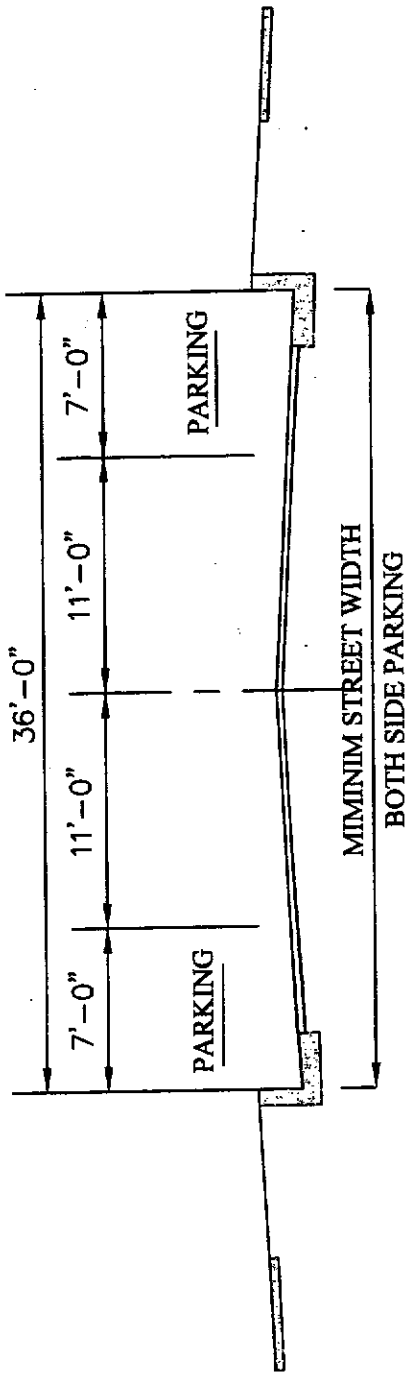

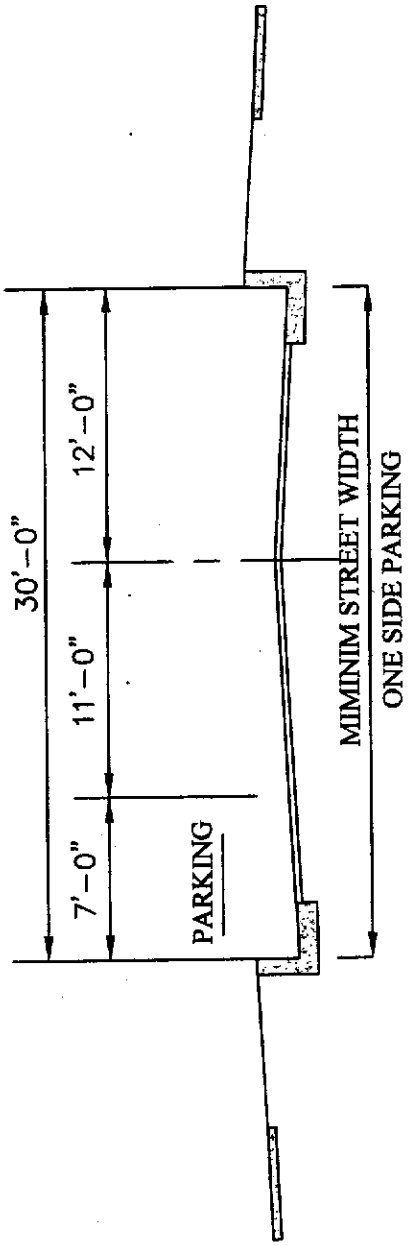

	STANDARD DETAIL	CITY OF WILMINGTON ENGINEERING OFFICE 305 CHESTNUT STREET PO. BOX 1810 WILMINGTON N.C. 28402 (910) 341-7807
DATE: 2001	MINIMUM STREET WIDTH FOR PARKING	
DRAWN BY JSR/CMR		
CHECKED BY B.P., P.E.		
SCALE NOT TO SCALE		SD 1-06

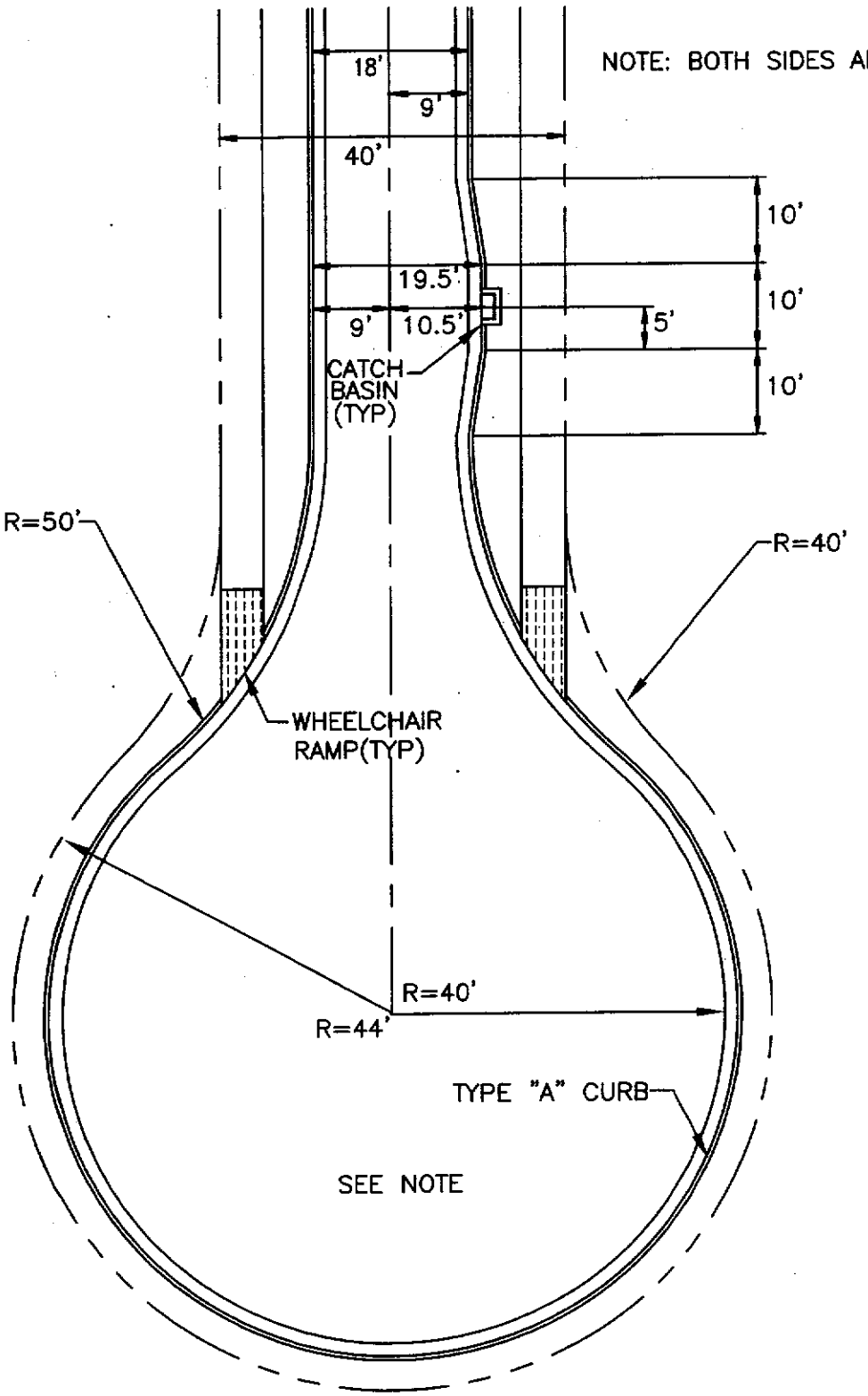

NOTE: 1. WHENEVER CATCH BASINS ARE TO BE INSTALLED WITHIN CUL-DE-SAC BULB THE RADIUS FROM THE CENTER POINT TO THE FACE OF CURB IS 41.6', AND THE RIGHT OF WAY RADIUS IS 46'.

	STANDARD DETAIL	CITY OF WILMINGTON ENGINEERING OFFICE 305 CHESTNUT STREET PO. BOX 1810 WILMINGTON N.C. 28402 (910) 341-7807
DATE: 2001	LOCAL "A" & "B" CUL-DE-SAC OPTION "1" RESIDENTIAL	
DRAWN BY JSR/CMR		
CHECKED BY B.P., P.E.		
SCALE NOT TO SCALE		SD 1-10

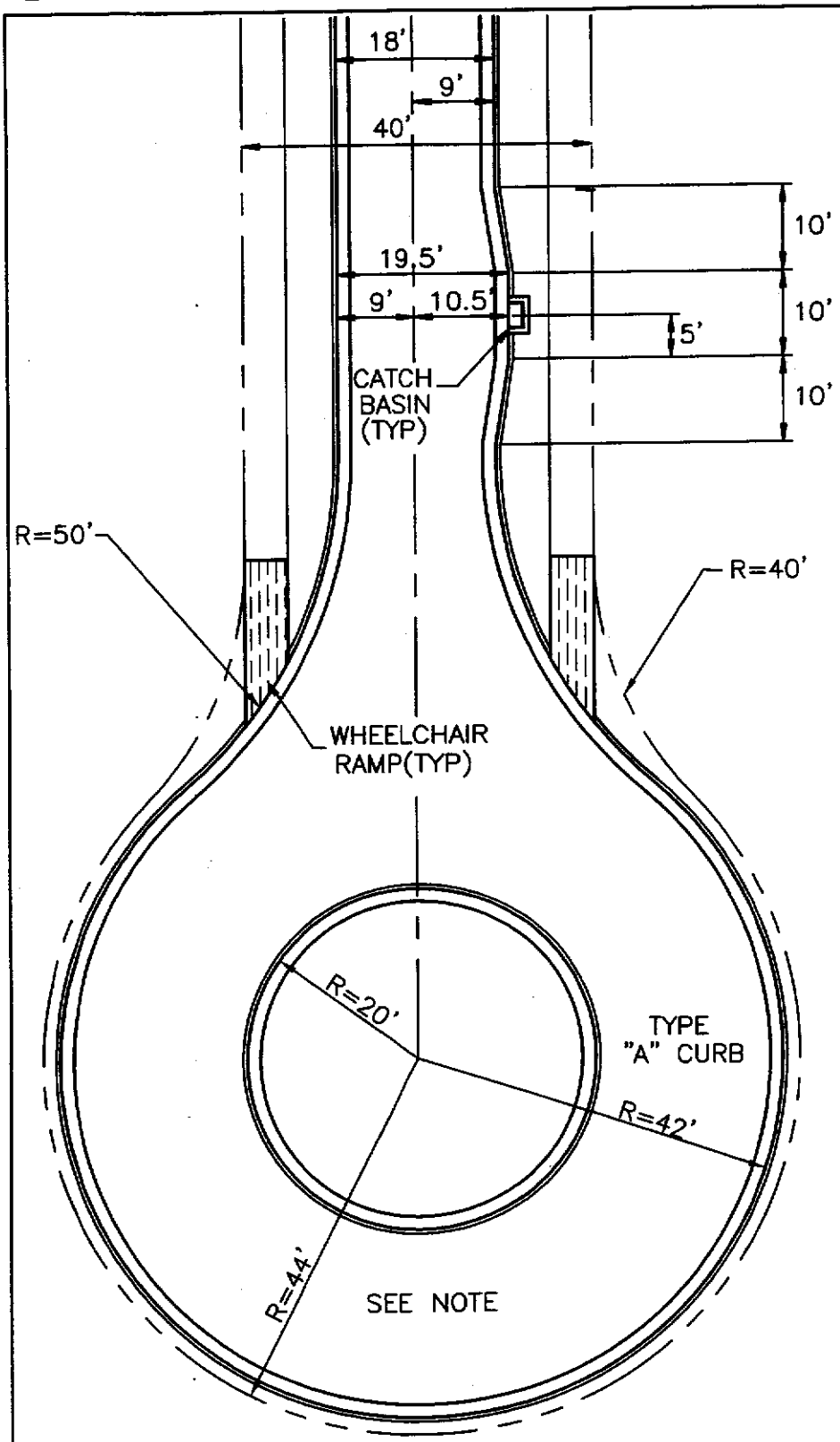

NOTE: 1. WHENEVER CATCH BASINS ARE TO BE INSTALLED WITHIN CUL-DE-SAC USING TYPE "A" CURB THE RADIUS FROM THE CENTER POINT TO THE FACE OF CURB IS 43.6', AND THE RIGHT OF WAY RADIUS IS 50'.

2. BOTH SIDES ARE SYMMETRICAL

	STANDARD DETAIL	CITY OF WILMINGTON ENGINEERING OFFICE 305 CHESTNUT STREET PO. BOX 1810 WILMINGTON N.C. 28402 (910) 341-7807
DATE: 2001	LOCAL "A" & "B" CUL-DE-SAC OPTION "1" ISLAND, RESIDENTIAL	
DRAWN BY JSR/CMR		
CHECKED BY B.P., P.E.		
SCALE NOT TO SCALE		SD 1-11

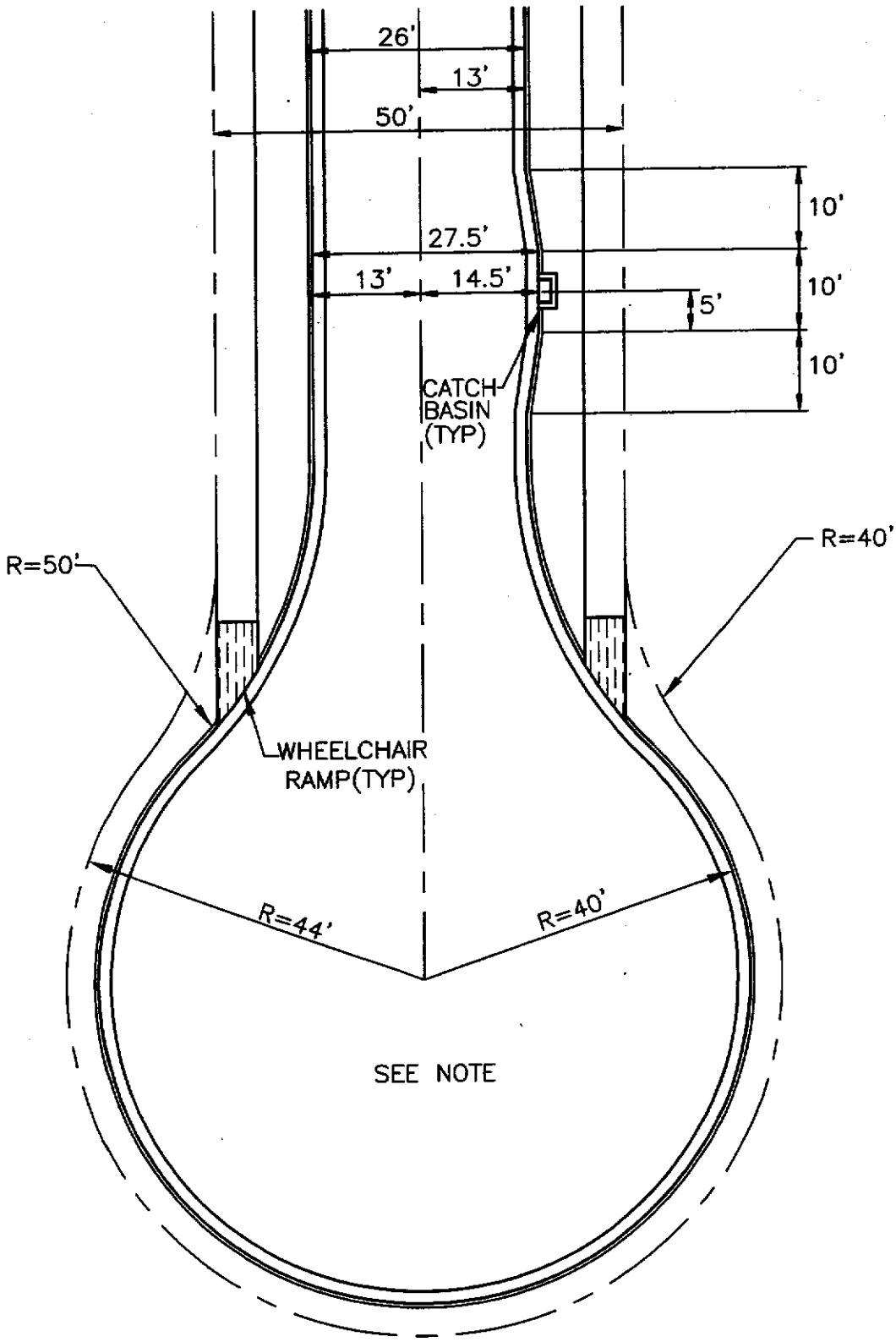

NOTE: 1. WHENEVER CATCH BASINS ARE TO BE INSTALLED WITHIN CUL-DE-SAC BULB USING TYPE "A" CURB THE RADIUS FROM THE CENTER POINT TO THE FACE OF CURB IS 41.6'. WHEN USING TYPE "D" CURB WITH CATCH BASINS THE RIGHT OF WAY RADIUS IS 46'.

2. BOTH SIDES ARE SYMMETRICAL

	STANDARD DETAIL	CITY OF WILMINGTON ENGINEERING OFFICE 305 CHESTNUT STREET PO. BOX 1810 WILMINGTON N.C. 28402 (910) 341-7807
DATE: 2001	LOCAL "A" & "B" CUL-DE-SAC OPTION "2" RESIDENTIAL	
DRAWN BY JSR/CMR		
CHECKED BY B.P., P.E.		
SCALE NOT TO SCALE		SD 1-12

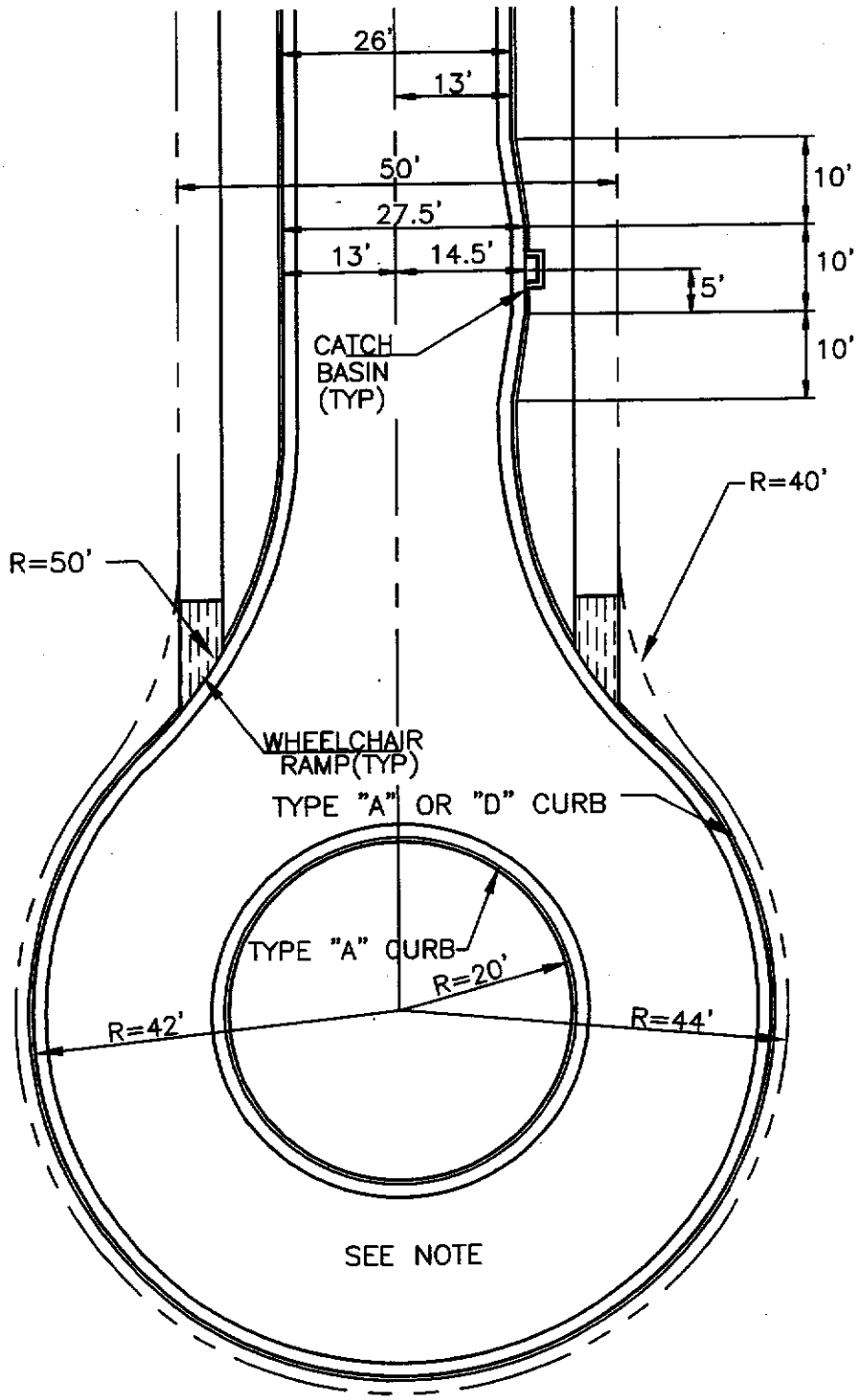

NOTE:

1. WHENEVER CATCH BASINS ARE TO BE INSTALLED WITHIN CUL-DE-SAC BULB USING TYPE "A" CURB THE RADIUS FROM THE CENTER POINT TO THE FACE OF CURB IS 43.6', AND THE RIGHT OF WAY IS 50'. WHEN USING TYPE "D" CURB WITH CATCH BASINS THE RIGHT OF WAY IS 50'.
2. WHEN USING TYPE "D" CURB THE RADIUS FROM THE CENTER POINT TO THE RIGHT OF WAY LINE IS 46' UNLESS NOTE (1) APPLIES.
3. BOTH SIDES ARE SYMMETRICAL

	STANDARD DETAIL	CITY OF WILMINGTON ENGINEERING OFFICE 305 CHESTNUT STREET PO. BOX 1810 WILMINGTON N.C. 28402 (910) 341-7807
DATE: 2001	LOCAL "A" & "B" CUL-DE-SAC OPTION "2" ISLAND, RESIDENTIAL	
DRAWN BY JSR/CMR		
CHECKED BY B.P., P.E.		
SCALE NOT TO SCALE		SD 1-13

RECOMMENDATION – PRINCIPLE 4

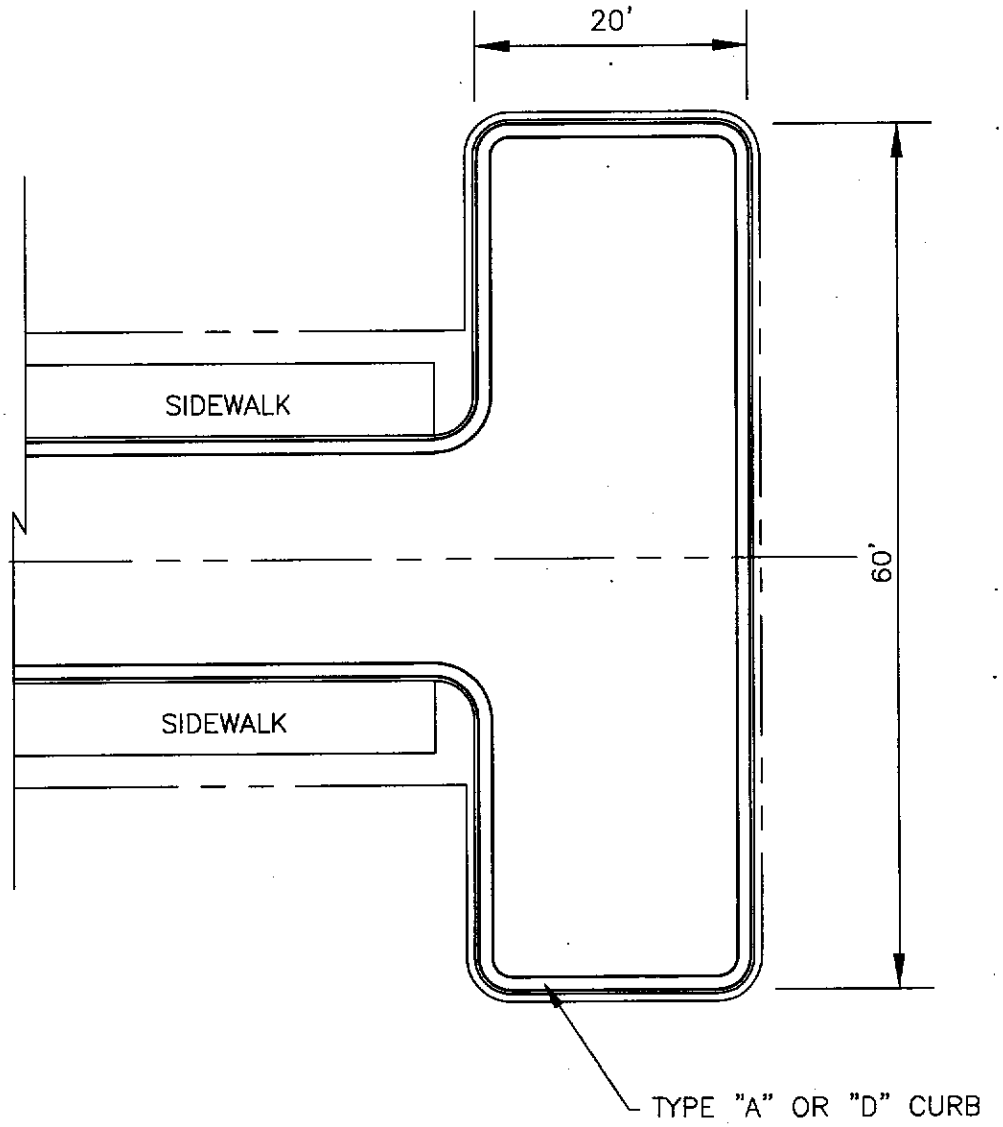

	STANDARD DETAIL	CITY OF WILMINGTON ENGINEERING OFFICE 305 CHESTNUT STREET PO. BOX 1810 WILMINGTON N.C. 28402 (910) 341-7807
DATE: 2001	RESIDENTIAL 60' by 20' T-SHAPED TURNAROUND	
DRAWN BY JSR/CMR		
CHECKED BY D.B.M., P.E.		
SCALE NOT TO SCALE		SD 1-13a

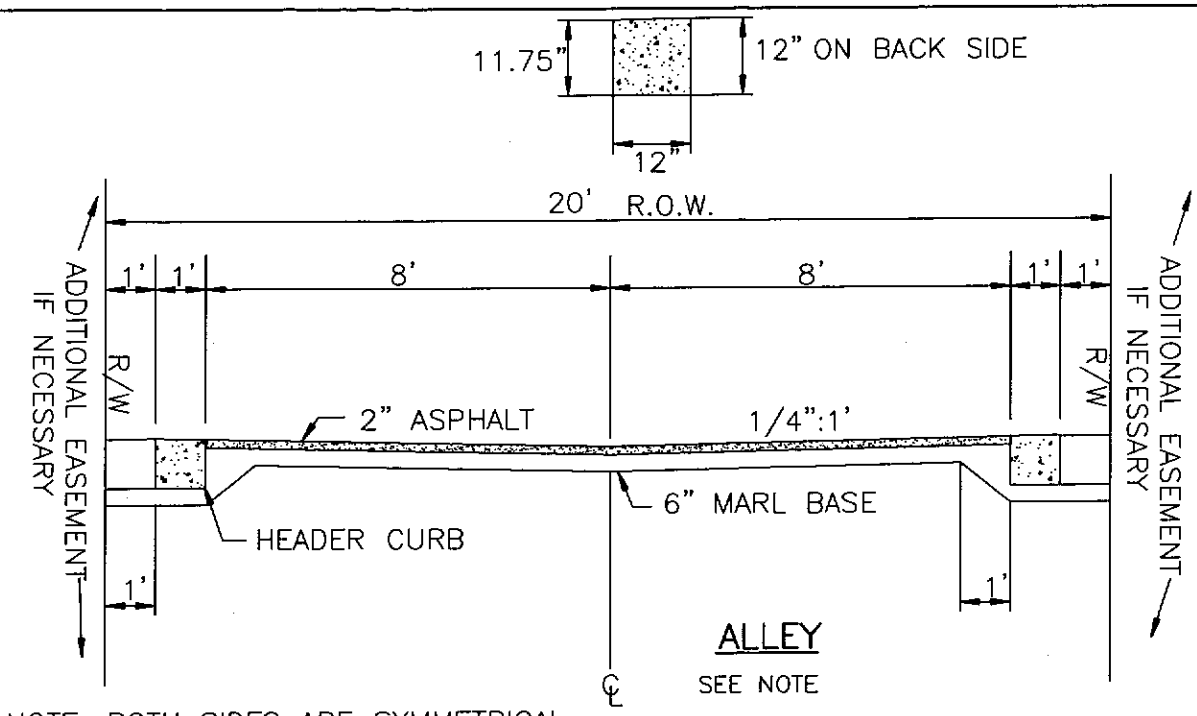

NOTE: BOTH SIDES ARE SYMMETRICAL

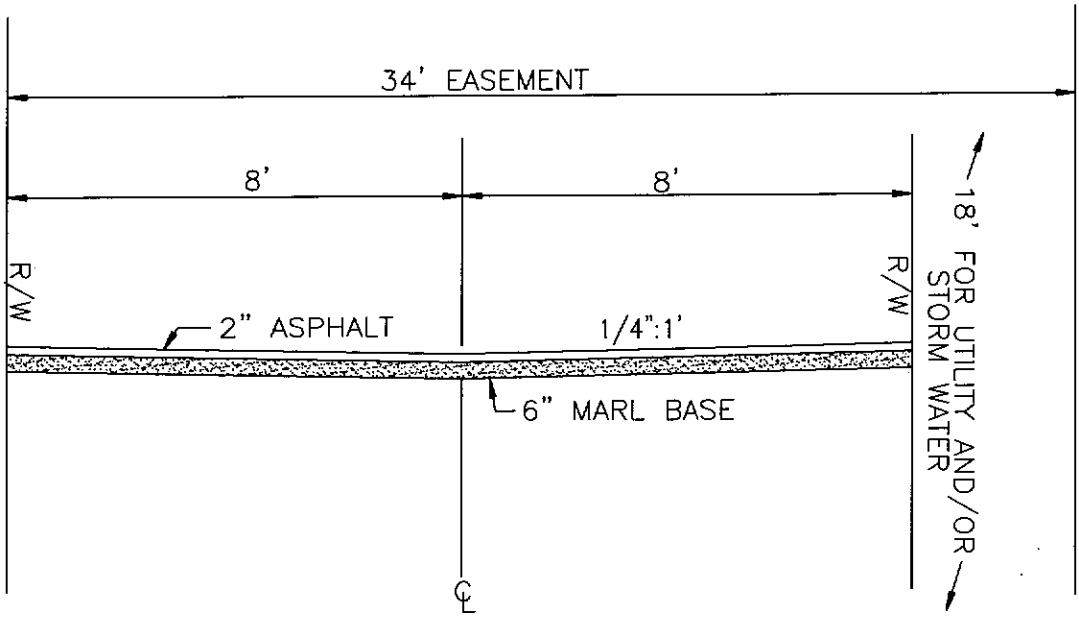

PRIVATE ACCESS EASEMENT

SEE NOTES

ALLEY NOTES:

1. NOT TO CONTAIN WATER AND SEWER UTILITY LINES

PRIVATE ACCESS EASEMENT NOTES:

1. 400' MAXIMUM LENGTH TO FURTHEST UNIT FROM PUBLIC STREET.
2. SERVES A MAXIMUM OF 4 SINGLE FAMILY OR DUPLEX UNITS.
3. 23' WIDTH REQUIRED AT STREET INTERSECTION.

ALLEY & PRIVATE ACCESS EASEMENT SECTIONS W/HEADER CURB, RESIDENTIAL
SD 1-14

	STANDARD DETAIL	CITY OF WILMINGTON ENGINEERING OFFICE 305 CHESTNUT STREET PO. BOX 1810 WILMINGTON N.C. 28402 (910) 341-7807
DATE: 2001	ALLEY & PRIVATE ACCESS EASEMENT SECTIONS W/HEADER CURB, RESIDENTIAL	
DRAWN BY JSR/CMR		
CHECKED BY B.P., P.E.		
SCALE NOT TO SCALE		SD 1-14

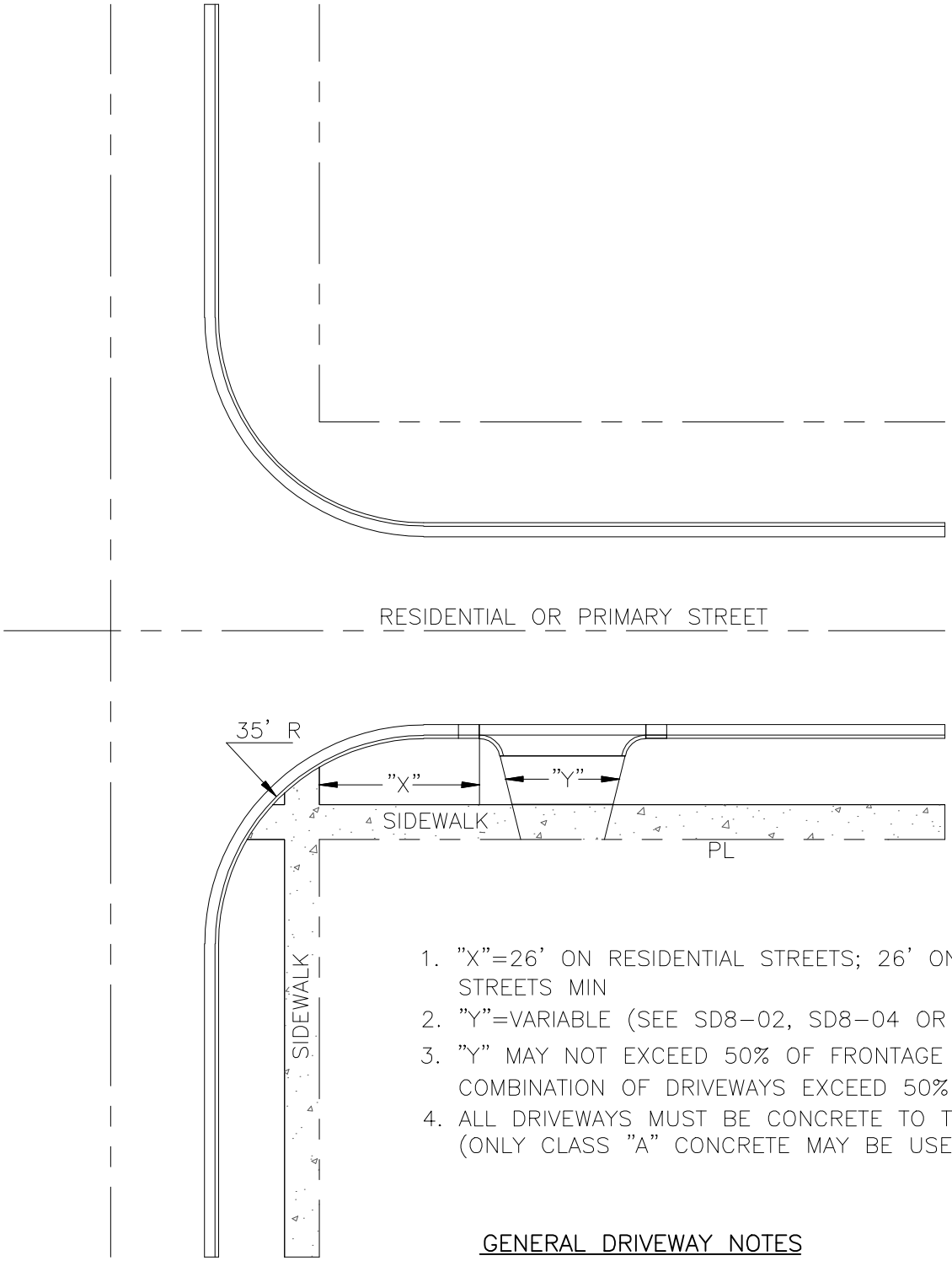

1. "X"=26' ON RESIDENTIAL STREETS; 26' ON PRIMARY STREETS MIN
2. "Y"=VARIABLE (SEE SD8-02, SD8-04 OR SD8-05)
3. "Y" MAY NOT EXCEED 50% OF FRONTAGE NOR MAY ANY COMBINATION OF DRIVEWAYS EXCEED 50% OF FRONTAGE
4. ALL DRIVEWAYS MUST BE CONCRETE TO THE PL (ONLY CLASS "A" CONCRETE MAY BE USED)

GENERAL DRIVEWAY NOTES
SD 8-07

	STANDARD DETAIL	CITY OF WILMINGTON ENGINEERING OFFICE 305 CHESTNUT STREET PO. BOX 1810 WILMINGTON N.C. 28402 (910) 341-7807
DATE: 6/01/2007	GENERAL DRIVEWAY NOTES	
DRAWN BY JSR/CMR		
CHECKED BY B.P., P.E.		
SCALE NOT TO SCALE		SD 8-07

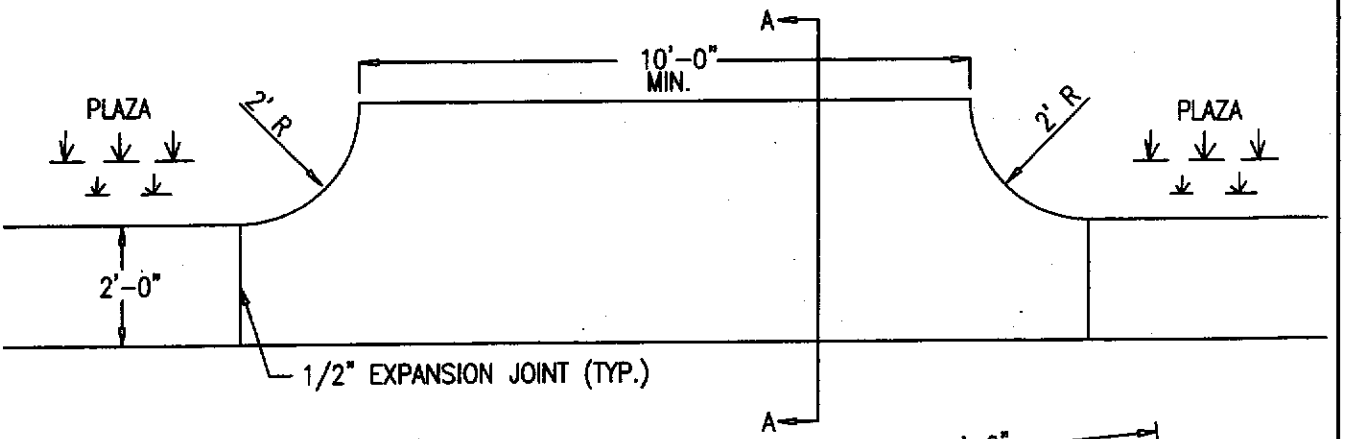

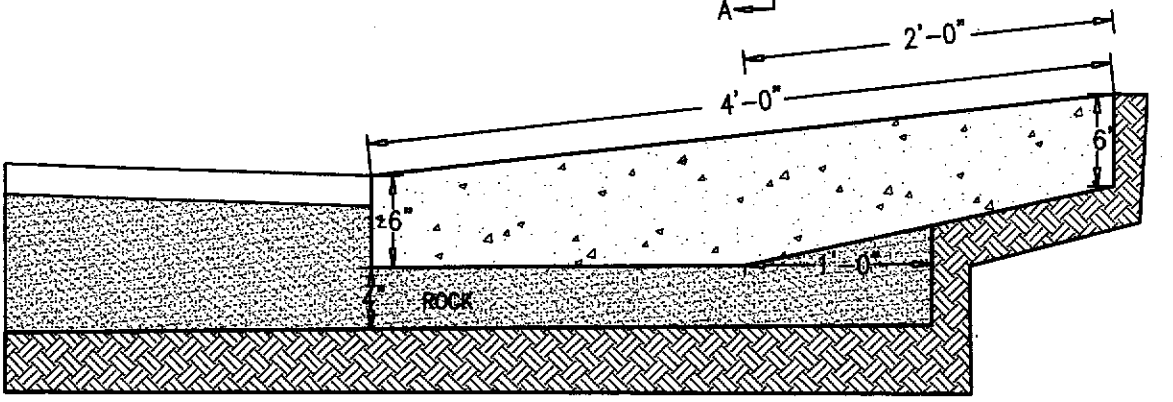

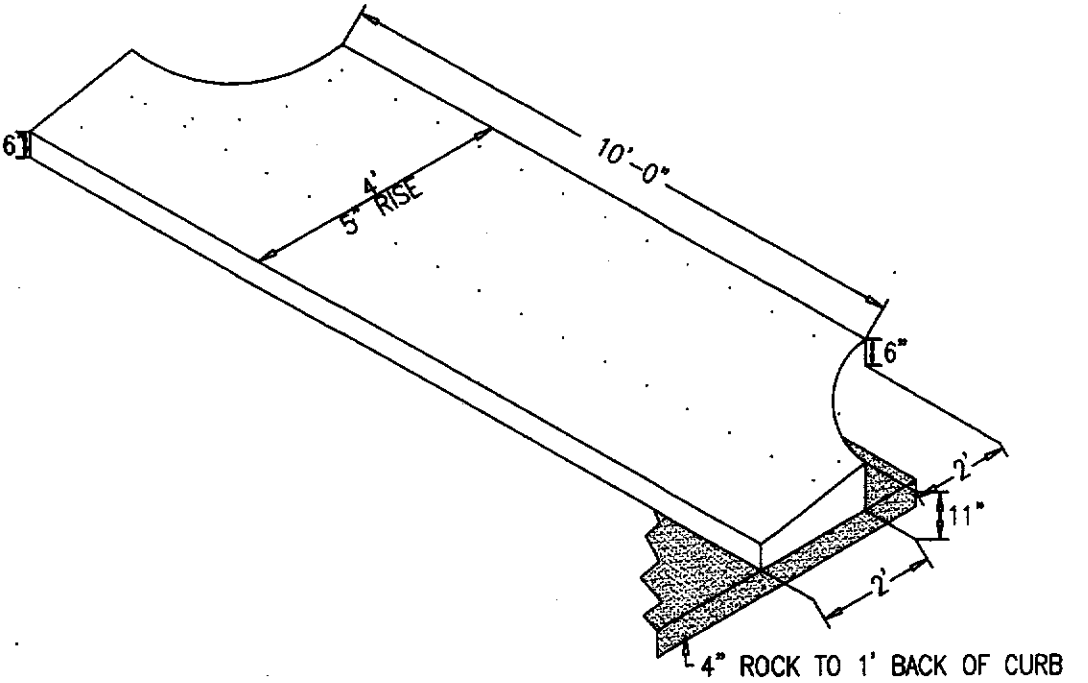

	STANDARD DETAIL	CITY OF WILMINGTON ENGINEERING OFFICE 305 CHESTNUT STREET PO. BOX 1810 WILMINGTON N.C. 28402 (910) 341-7807
DATE: 2001	TYPE "D" CURB DRIVEWAY ENTRANCE WITH 2' RADIUS	
DRAWN BY JSR/CMR		
CHECKED BY B.P., P.E.		
SCALE NOT TO SCALE		SD 8-01

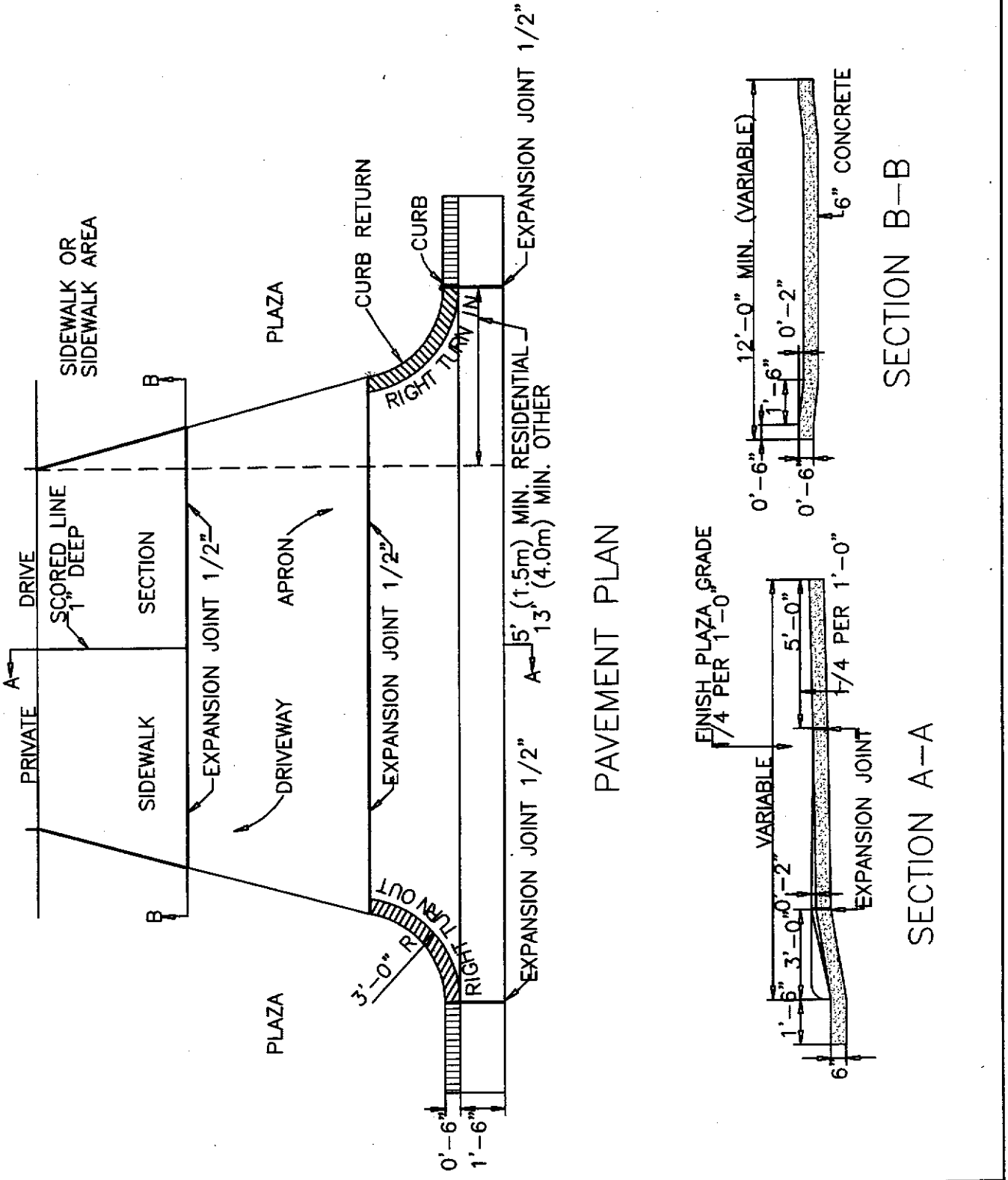

	STANDARD DETAIL	CITY OF WILMINGTON ENGINEERING OFFICE 305 CHESTNUT STREET PO. BOX 1810 WILMINGTON N.C. 28402 (910) 341-7807
DATE: 2001	STANDARD DRIVEWAY DETAIL	SD 8-02
DRAWN BY JSR/CMR		
CHECKED BY B.P., P.E.		
SCALE NOT TO SCALE		

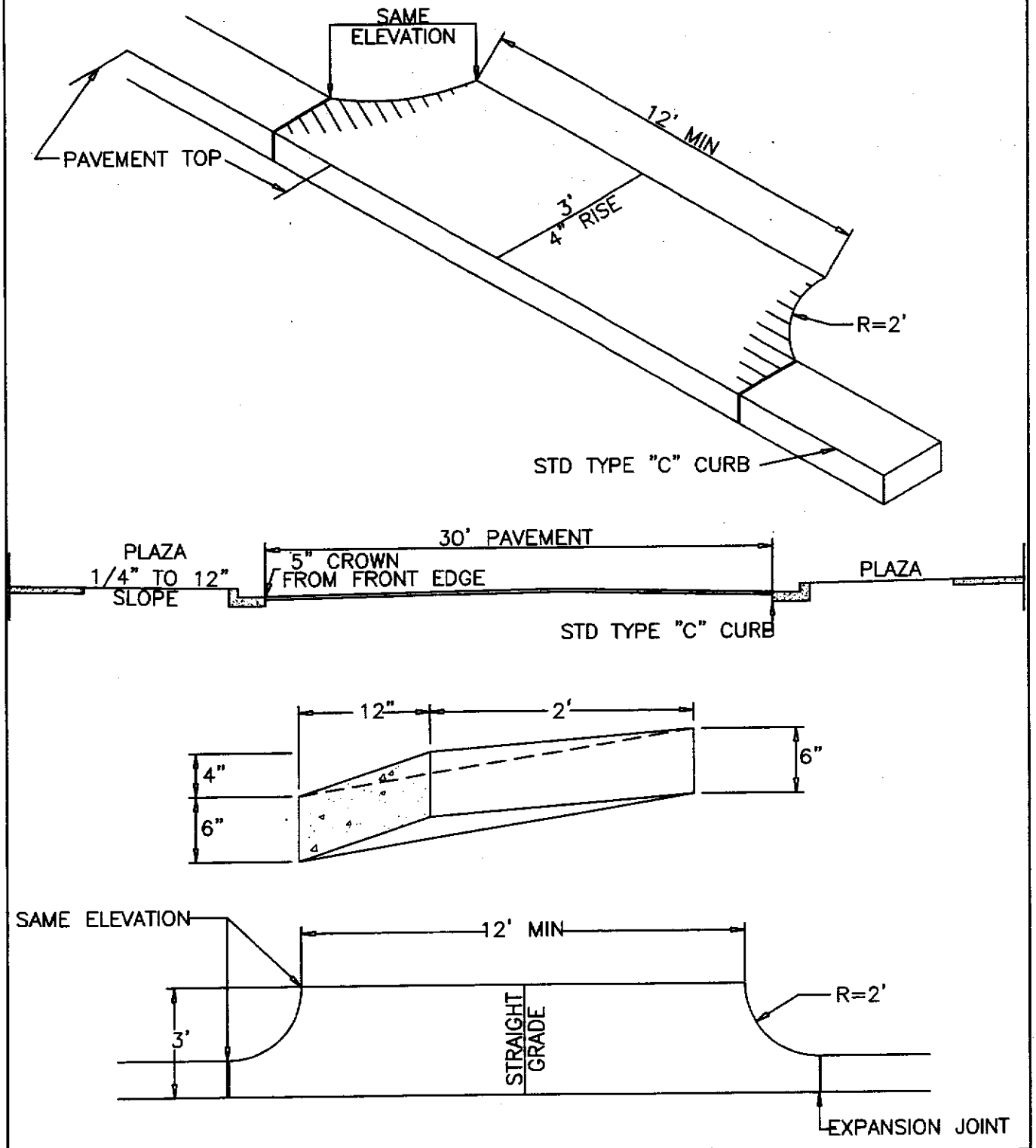

	STANDARD DETAIL	CITY OF WILMINGTON ENGINEERING OFFICE 305 CHESTNUT STREET PO. BOX 1810 WILMINGTON N.C. 28402 (910) 341-7807
DATE: 2001	TYPICAL SLOPE FACE CURB DRIVE ENTRANCE	
DRAWN BY JSR/CMR		
CHECKED BY B.P., P.E.		
SCALE NOT TO SCALE		SD 8-03

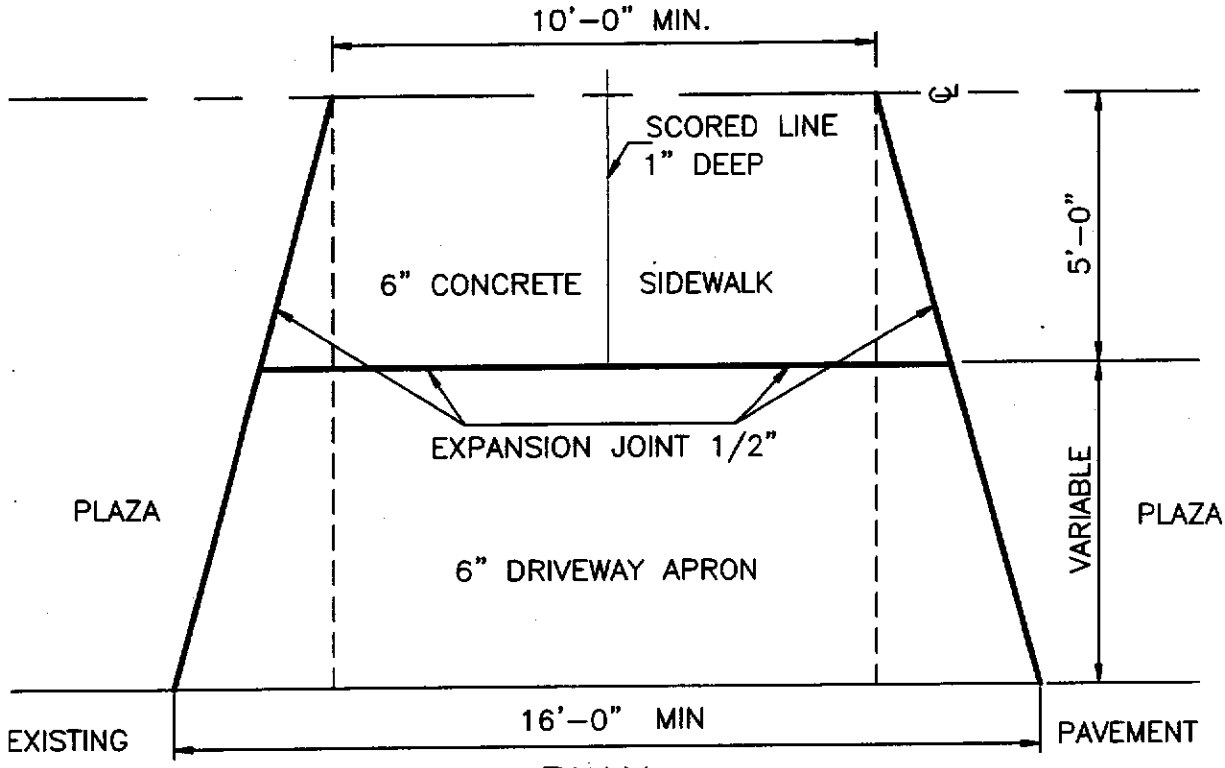

PLAN

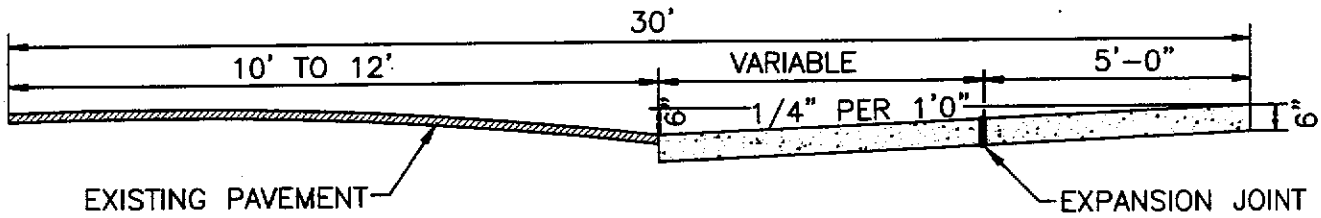

SECTION A-A

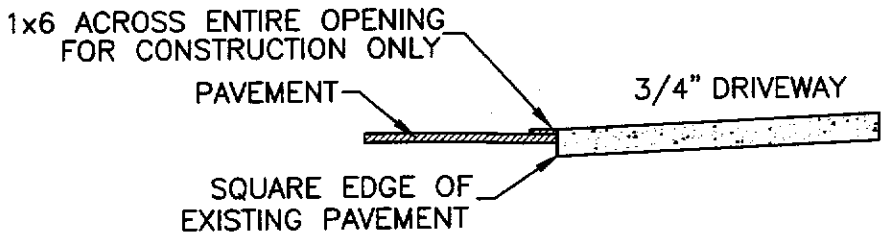

FORMING DETAIL

	STANDARD DETAIL	CITY OF WILMINGTON ENGINEERING OFFICE 305 CHESTNUT STREET PO. BOX 1810 WILMINGTON N.C. 28402 (910) 341-7807
DATE: 2001	RESIDENTIAL DRIVEWAY STREETS WITH NO CURB	
DRAWN BY JSR/CMR		
CHECKED BY B.P., P.E.		
SCALE NOT TO SCALE		SD 8-05

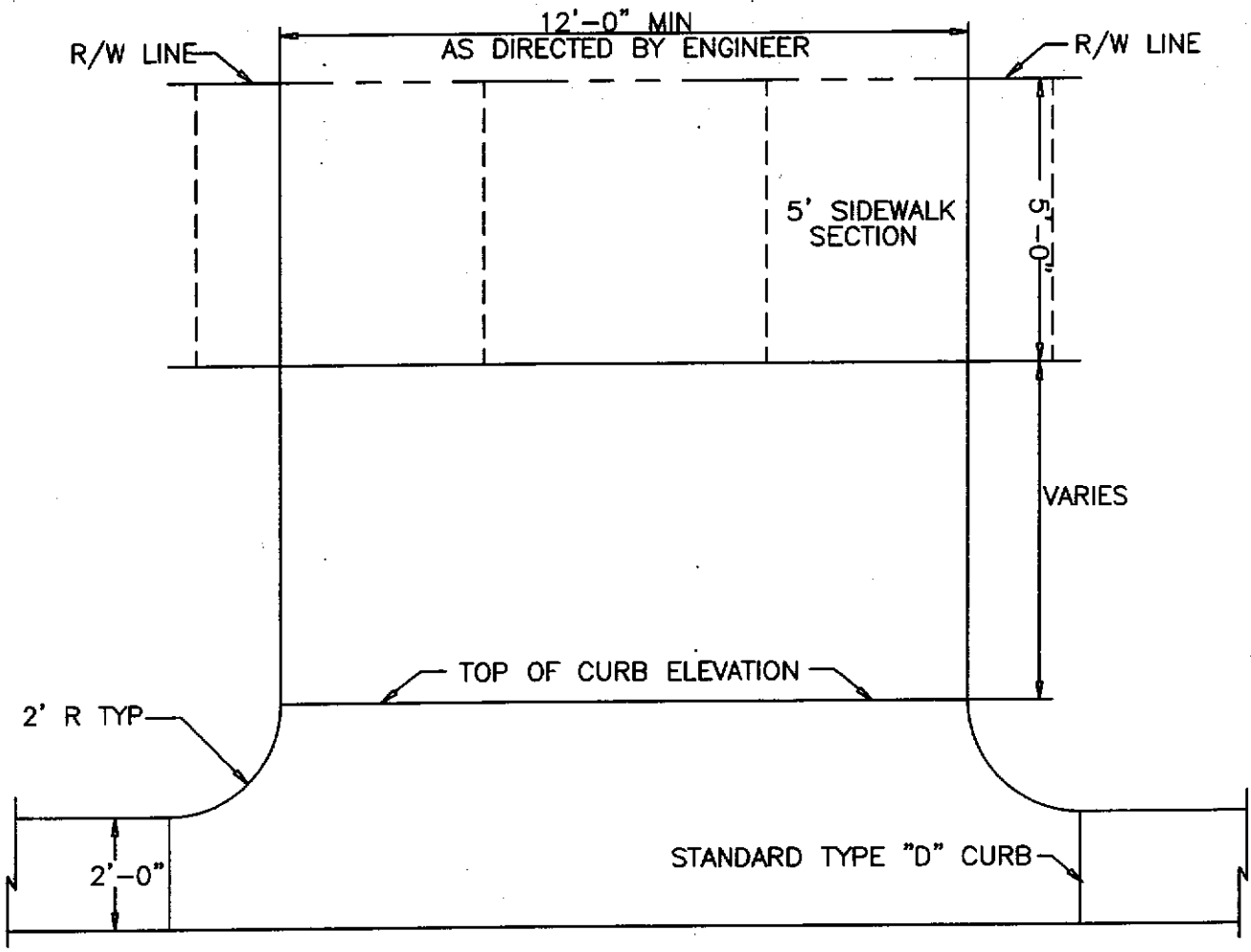

	STANDARD DETAIL	
DATE: 2001	TYPICAL DRIVEWAY WITH TYPE "D" CURB	CITY OF WILMINGTON ENGINEERING OFFICE 305 CHESTNUT STREET PO. BOX 1810 WILMINGTON N.C. 28402 (910) 341-7807
DRAWN BY JSR/CMR		
CHECKED BY B.P., P.E.		
SCALE NOT TO SCALE		SD 8-06

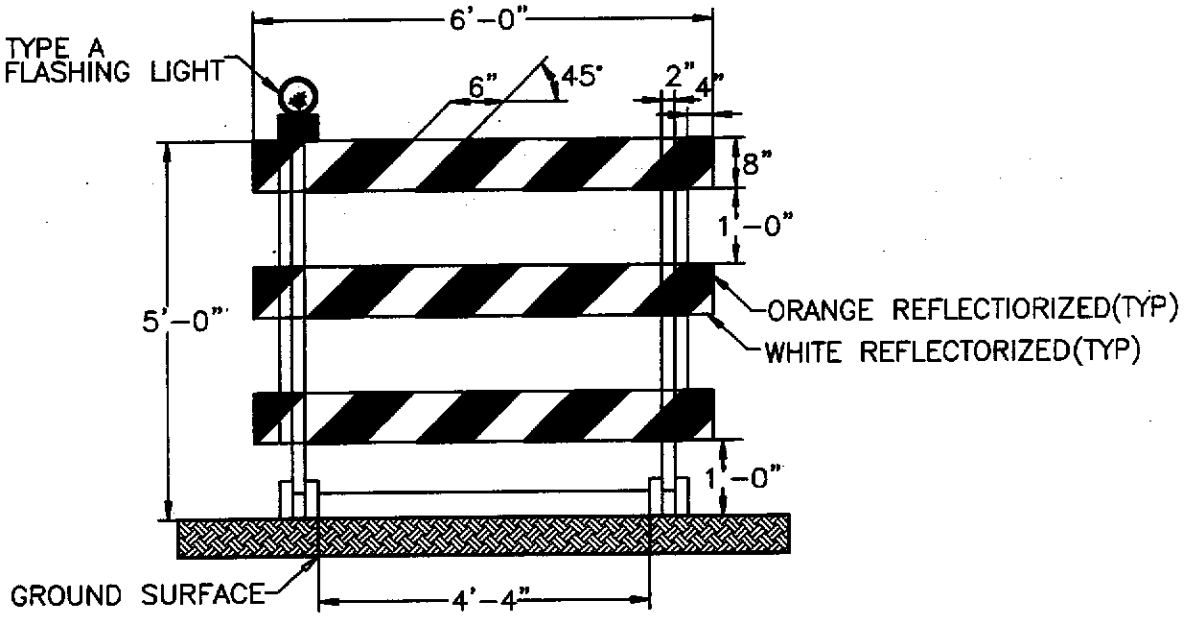

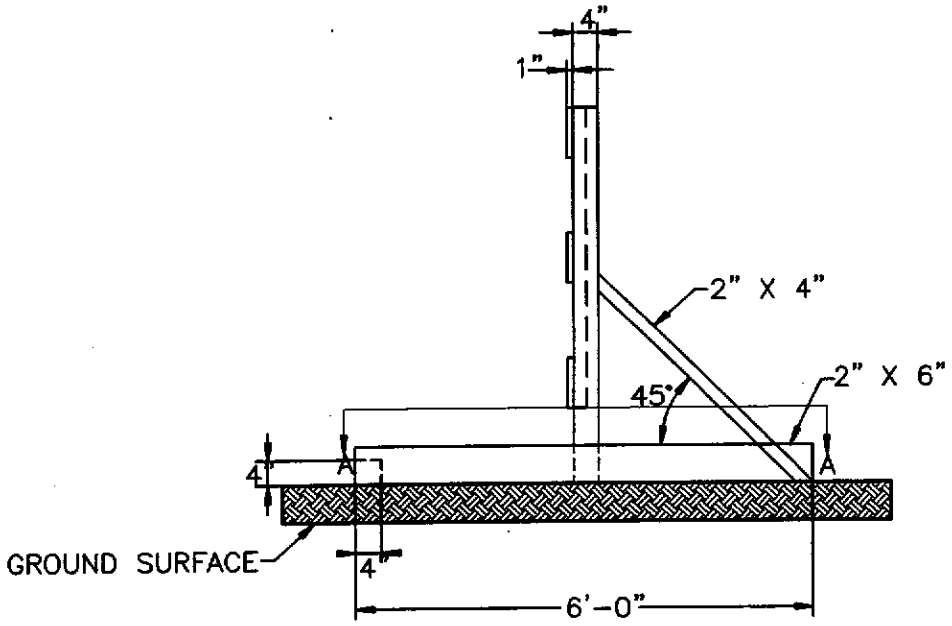

A–A

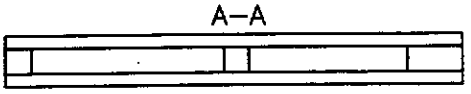

	STANDARD DETAIL	CITY OF WILMINGTON ENGINEERING OFFICE 305 CHESTNUT STREET PO. BOX 1810 WILMINGTON N.C. 28402 (910) 341-7807
DATE: 2001	TYPE III BARRICADE	
DRAWN BY JSR/CMR		
CHECKED BY B.P., P.E.		
SCALE NOT TO SCALE		SD 15-07

STANDARD N.C. "STOP" SIGN

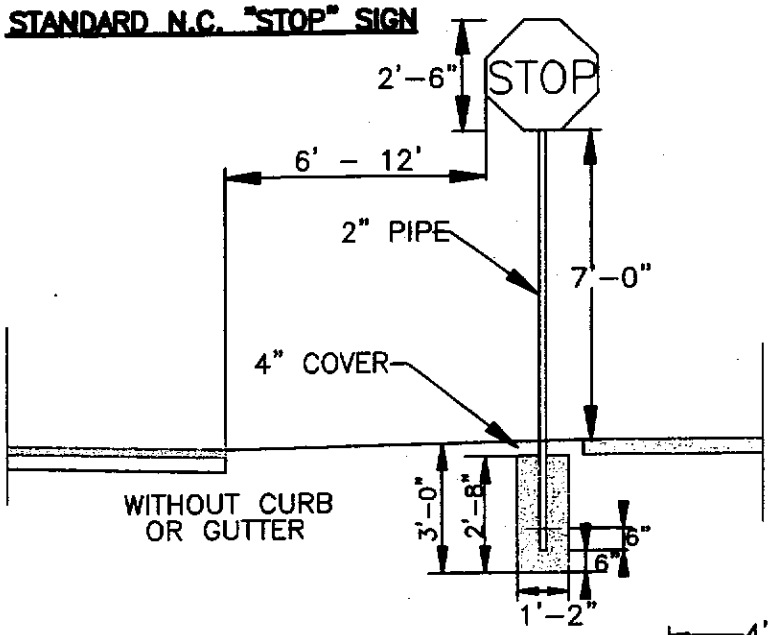

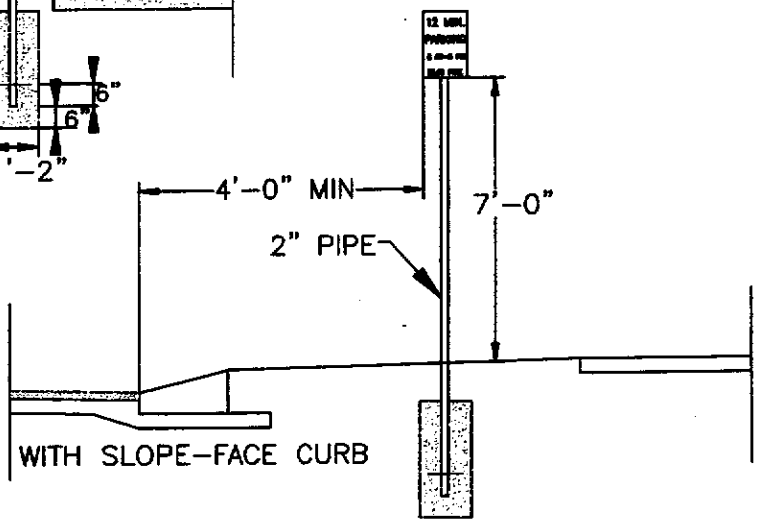

STANDARD INFORMATION SIGN

STREET NAME SIGN
(SEE NOTE)

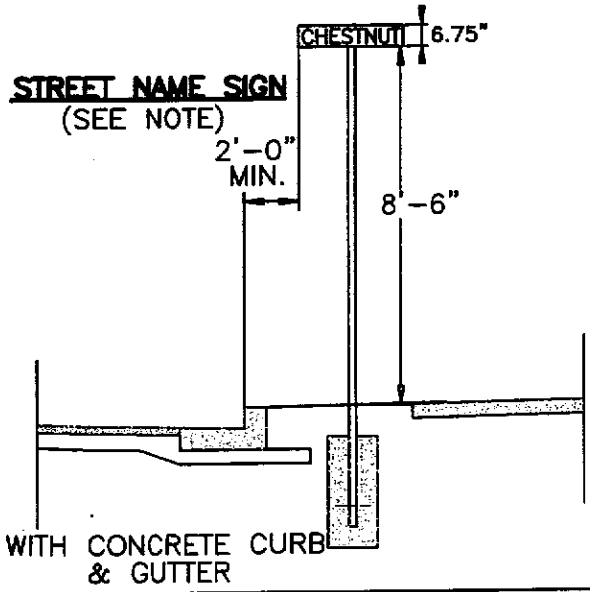

NOTES:

1. STREET NAME SIGNS SHALL BE A MINIMUM OF 6" EXTRUDED ALUMINUM BLADES USING A MINUMUM OF 4" C SERIES LETTERING IN REFLECTIVE SILVER & REFLECTIVE GREEN BACKGROUND.
2. ALL REFLECTIVE SIGNS SHALL BE MADE OF ENGINEERING GRADE OR HIGH INTENSITY GRADE REFLECTIVE SHEETING OR APPROVED EQUIVALENT.
3. ALL SIGNS PLACED IN RIGHT-OF-WAY WILL BE APPROVED BY TRAFFIC ENGINEERING DIVISION.
4. ALL FOOTINGS TYPICAL FOR ALL SIGNS, WHICH NEED TO BE ANCHORED IN CONCRETE.

	STANDARD DETAIL	CITY OF WILMINGTON ENGINEERING OFFICE 305 CHESTNUT STREET PO. BOX 1810 WILMINGTON N.C. 28402 (910) 341-7807
DATE: 2001	SIGN INSTALLATION LOCATION	
DRAWN BY JSR/CMR		
CHECKED BY B.P., P.E.		
SCALE NOT TO SCALE		SD 15-03

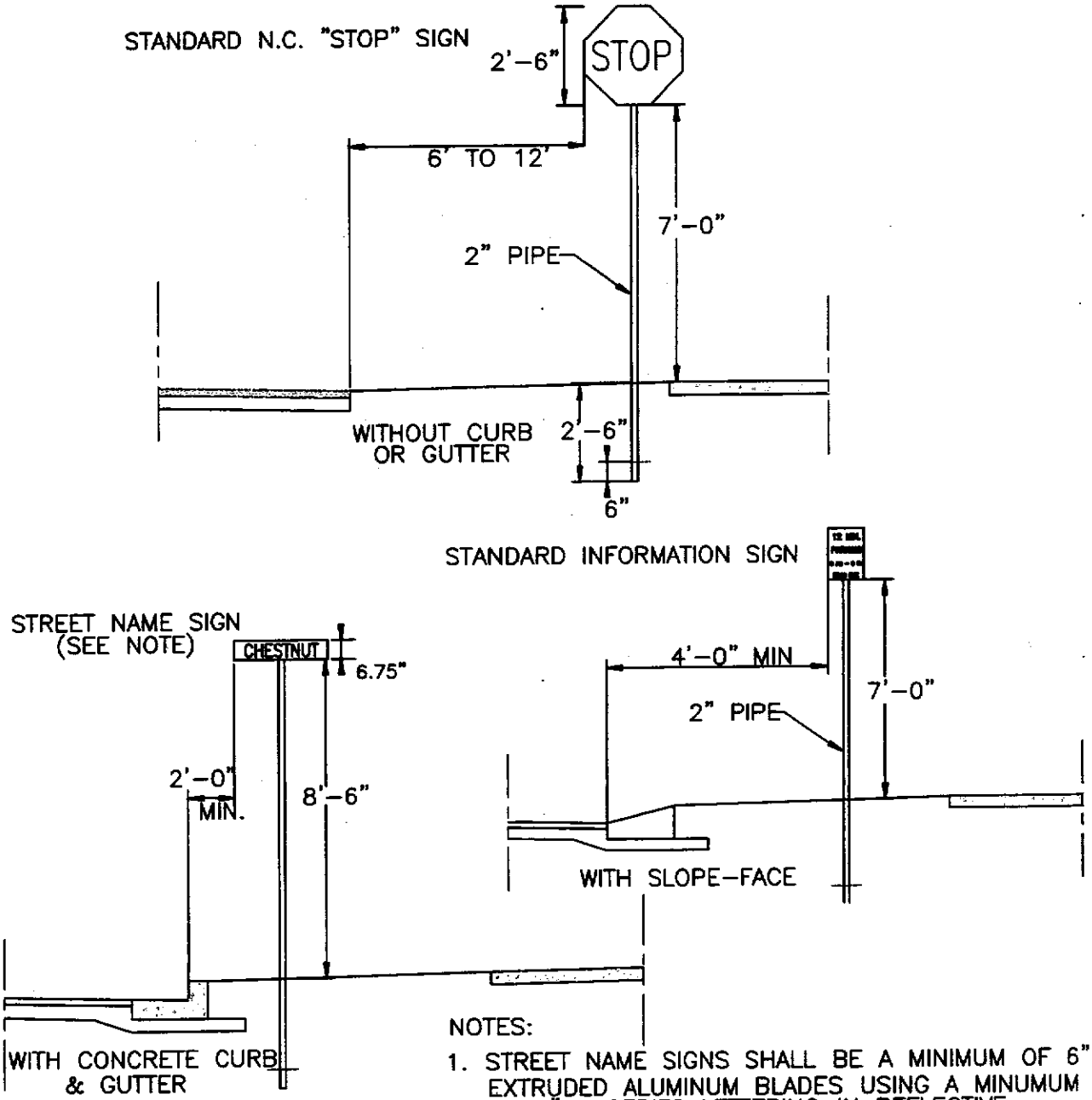

NOTES:

1. STREET NAME SIGNS SHALL BE A MINIMUM OF 6" EXTRUDED ALUMINUM BLADES USING A MINUMUM OF 4" C SERIES LETTERING IN REFLECTIVE SILVER & REFLECTIVE GREEN BACKGROUND.
2. ALL REFLECTIVE SIGNS SHALL BE MADE OF ENGINEERING GRADE OR HIGH INTENSITY GRADE REFLECTIVE SHEETING OR APPROVED EQUIVALENT.
3. ALL SIGNS PLACED IN RIGHT-OF-WAY WILL BE APPROVED BY TRAFFIC ENGINEERING DIVISION.
4. ALL FOOTINGS TYPICAL FOR ALL SIGNS, WHICH NEED TO BE ANCHORED IN CONCRETE.

	STANDARD DETAIL	CITY OF WILMINGTON ENGINEERING OFFICE 305 CHESTNUT STREET PO. BOX 1810 WILMINGTON N.C. 28402 (910) 341-7807
DATE: 2001	STANDARD SIGN INSTALLATION AND LOCATION	
DRAWN BY JSR/CMR		
CHECKED BY B.P., P.E.		
SCALE NOT TO SCALE		SD 15-04

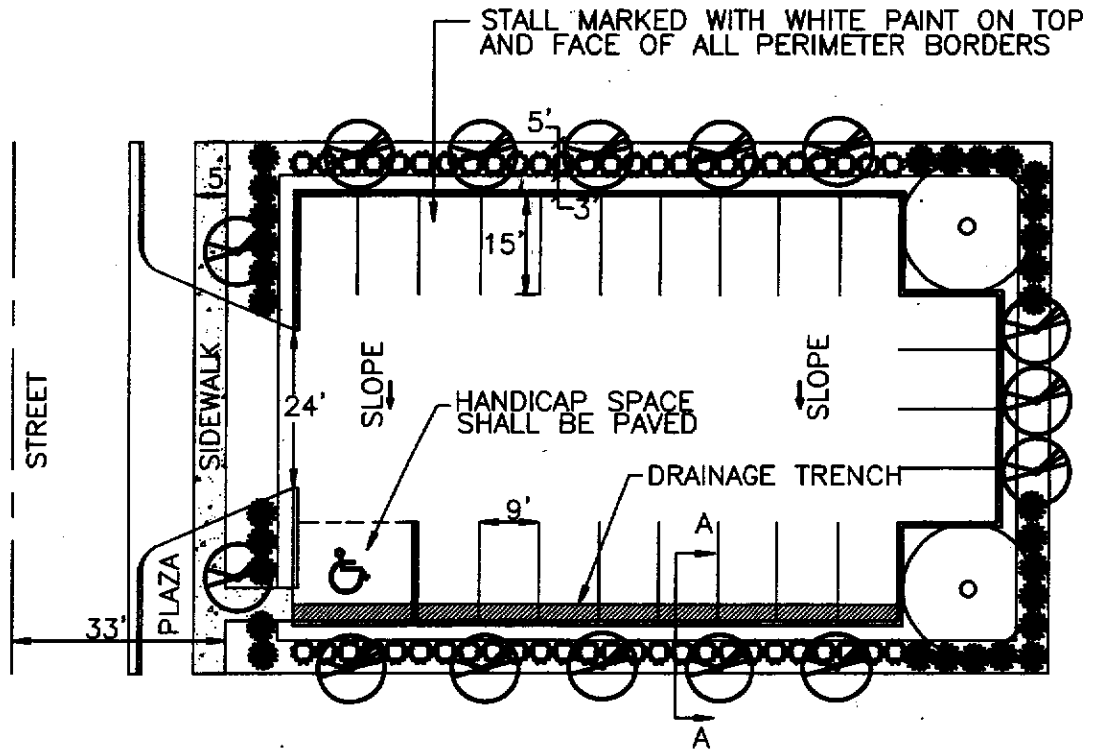

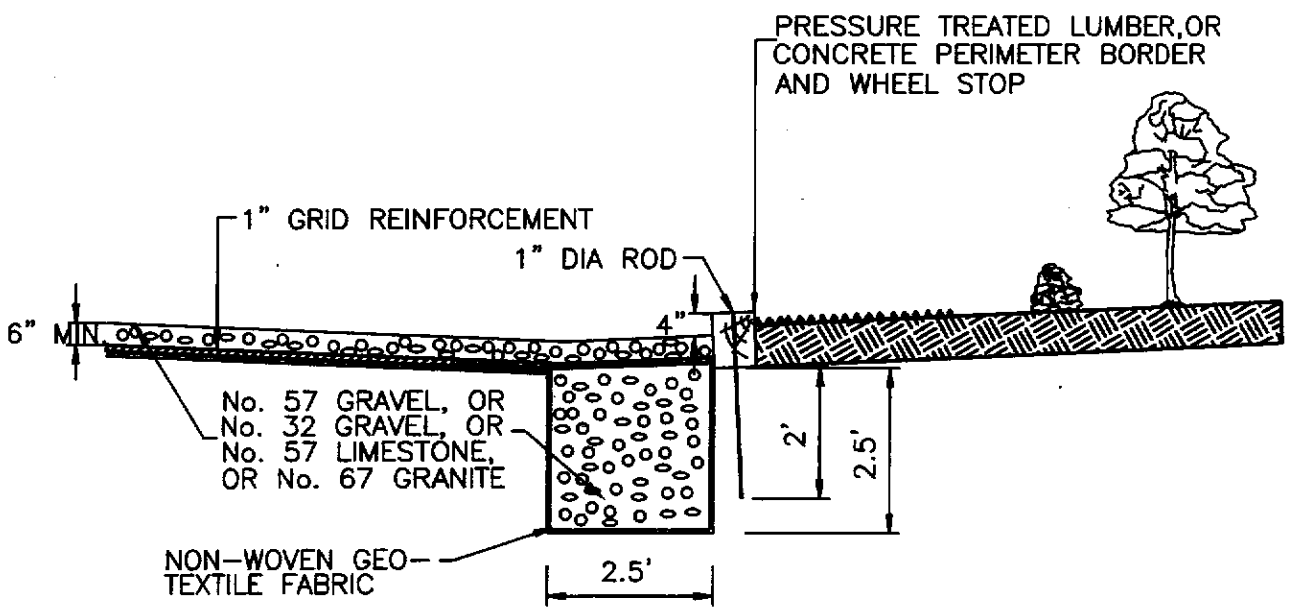

SECTION A–A

	STANDARD DETAIL	CITY OF WILMINGTON ENGINEERING OFFICE 305 CHESTNUT STREET PO. BOX 1810 WILMINGTON N.C. 28402 (910) 341-7807
DATE: 2001	TYPICAL UNPAVED PARKING FACILITY UNDER 25 STALLS	
DRAWN BY JSR/CMR		
CHECKED BY B.P., P.E.		
SCALE NOT TO SCALE		SD 15-10

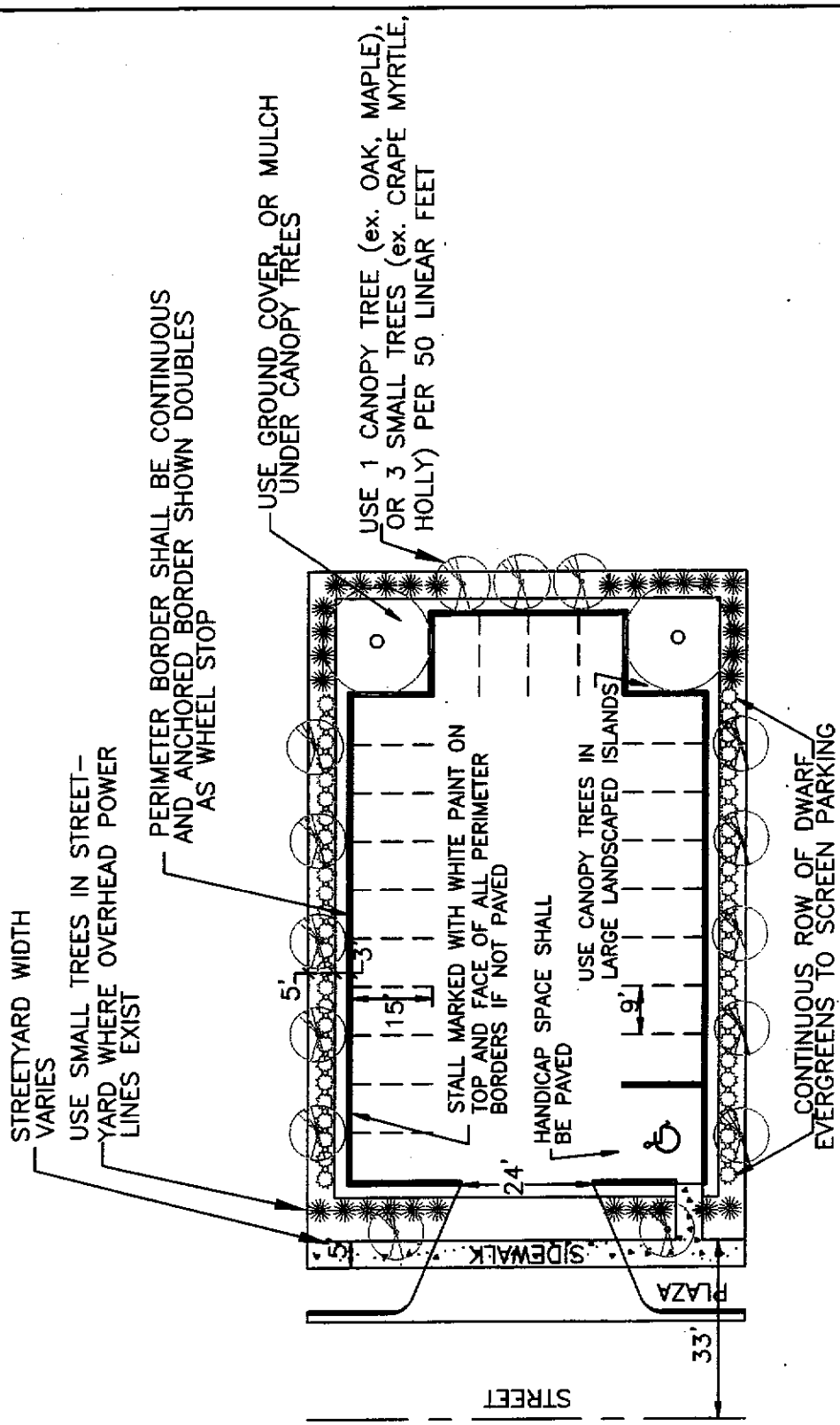

EXAMPLES OF PERIMETER LANDSCAPING

	STANDARD DETAIL	CITY OF WILMINGTON ENGINEERING OFFICE 305 CHESTNUT STREET PO. BOX 1810 WILMINGTON N.C. 28402 (910) 341-7807
DATE: 2001	PARKING FACILITY UNDER 25 STALLS PAVED OR UNPAVED	
DRAWN BY JSR/CMR		
CHECKED BY B.P., P.E.		
SCALE NOT TO SCALE	SHEET 1 OF 2	SD 15-11

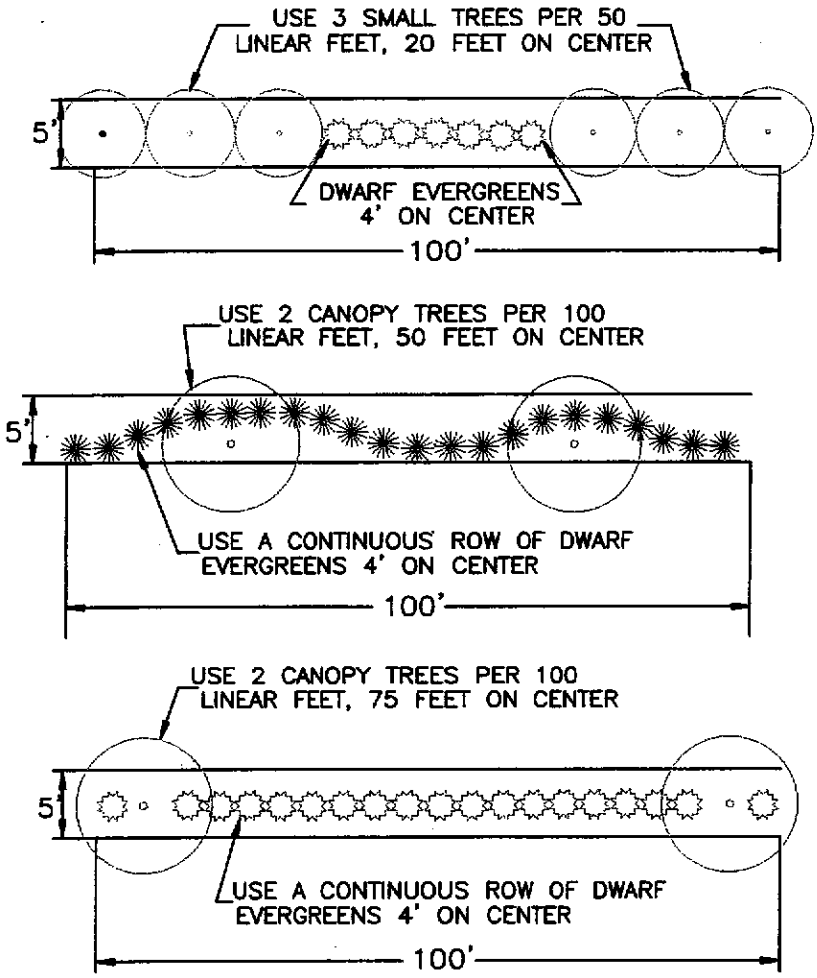

EXAMPLES OF PERIMETER LANDSCAPING

	STANDARD DETAIL	CITY OF WILMINGTON ENGINEERING OFFICE 305 CHESTNUT STREET PO. BOX 1810 WILMINGTON N.C. 28402 (910) 341-7807
DATE: 2001	PARKING FACILITY UNDER 25 STALLS PAVED OR UNPAVED	
DRAWN BY JSR/CMR		
CHECKED BY B.P., P.E.		
SCALE NOT TO SCALE	SHEET 2 OF 2	SD 15-11

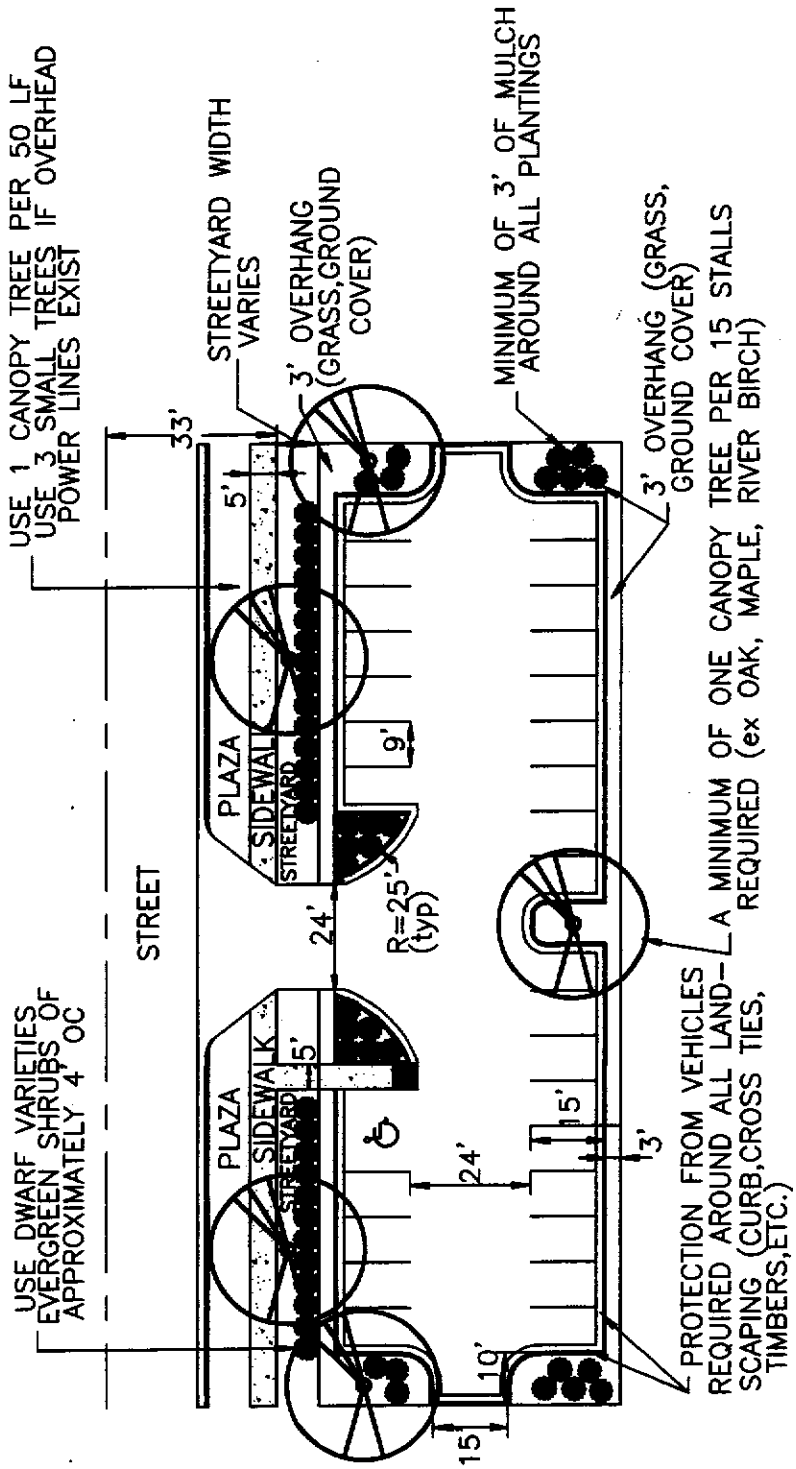

EXAMPLES OF PERIMETER LANDSCAPING

DATE: 2001	STANDARD DETAIL	CITY OF WILMINGTON ENGINEERING OFFICE 305 CHESTNUT STREET PO. BOX 1810 WILMINGTON N.C. 28402 (910) 341-7807
DRAWN BY JSR/CMR	PARKING FACILITY EQUAL TO OR GREATER THAN 25 STALLS	
CHECKED BY B.P., P.E.		
SCALE NOT TO SCALE	SHEET 1 OF 2	SD 15-12

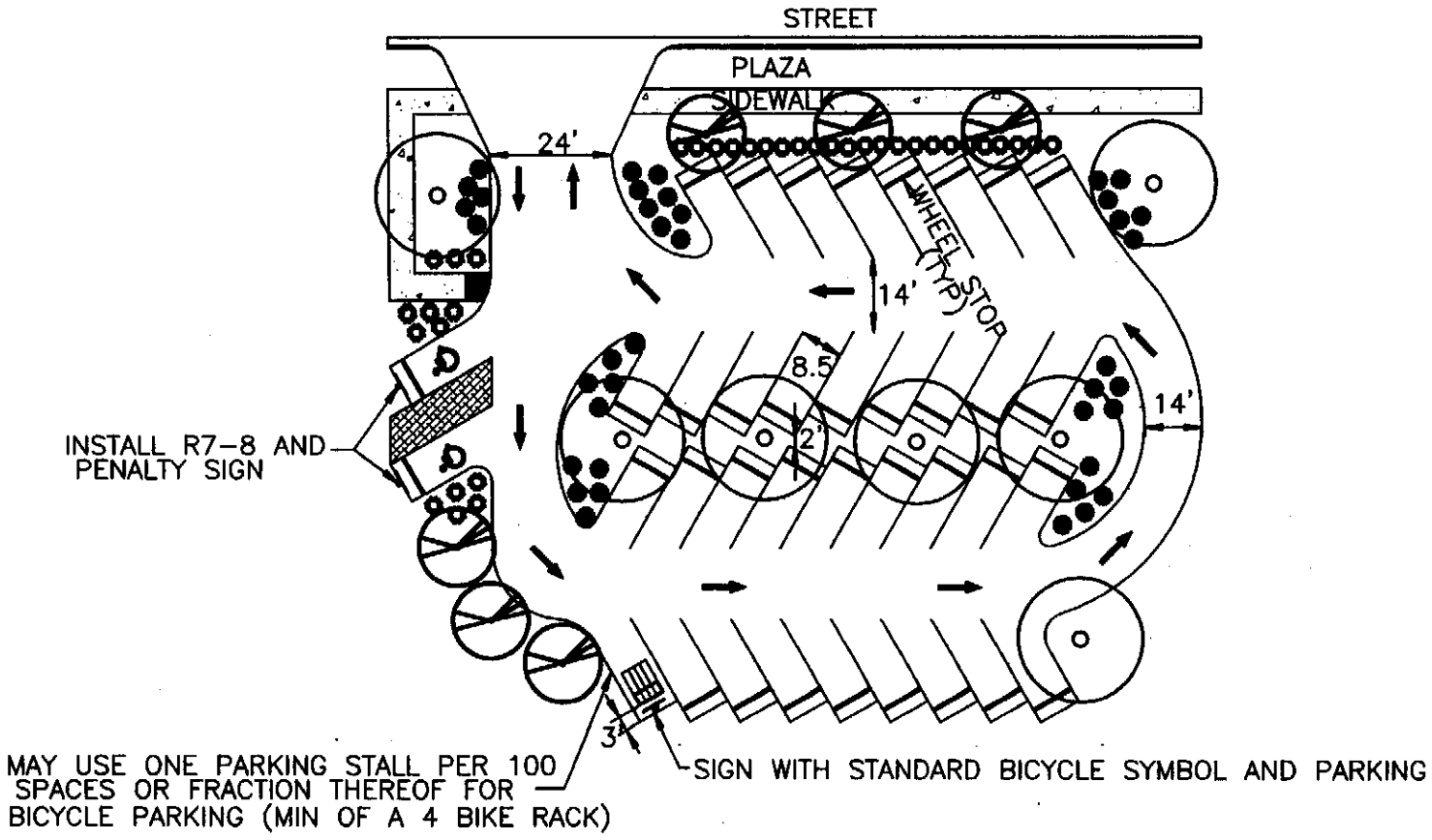

NOTES:
1 – SEE PARKING LOT DESIGN STANDARDS FOR ALTERNATIVE PARKING LOT DIMENSIONS
2 – SEE "LANDSCAPE" FOR RECOMMENDED PLANT LIST T-10.4

EXAMPLES OF PERIMETER LANDSCAPING

STANDARD DETAIL

PARKING FACILITY EQUAL TO OR GREATER THAN 25 STALLS

SHEET 2 OF 2

DATE: 2001
DRAWN BY JSR/CMR
CHECKED BY B.P., P.E.
SCALE NOT TO SCALE

CITY OF WILMINGTON
ENGINEERING OFFICE
305 CHESTNUT STREET
PO. BOX 1810
WILMINGTON N.C. 28402
(910) 341-7807

SD 15-12

1. Variances on stall widths, angle and other dimensions will be allowed only upon approval of the Traffic Engineer.
2. Wheel stops shall be required three (3) feet from the end of parking stall when using eighteen (18) feet deep stalls.
3. Curbing, crossties, utility poles, etc., can be used as wheel stops. (Must be anchored down)
4. All medians shall be a minimum of six (6) feet wide.
5. Parking bays which terminate at a circulation way shall provide for a minimum turning radius of twenty-five (25) feet, as measured from the edge of the travel portion.
6. All parking stall markings and lane arrows shall be white.
7. All other pavement markings, signs or other traffic control devices shall conform to the latest edition and/or interpretation of the Manual on Uniform Traffic Control Devices (MUTCD).
8. No obstructions will be allowed adjacent to a parking stall which would prevent safe ingress and egress from a parked vehicle.
9. Parking in fire lanes and in non-residential driveways shall be prevented by standard signs and as needed by portable barricades.

	STANDARD DETAIL	CITY OF WILMINGTON ENGINEERING OFFICE 305 CHESTNUT STREET PO. BOX 1810 WILMINGTON N.C. 28402 (910) 341-7807
DATE: 2001	PARKING FACILITY DESIGN NOTES	
DRAWN BY JSR/CMR		
CHECKED BY B.P., P.E.		
SCALE NOT TO SCALE		SD 15-13

1. No plantings over thirty (30) inches in height allowed in vision clearance.
2. Protection from vehicular traffic provided around all landscaping with a minimum height of six (6) inches.
3. Owner is responsible for maintenance to ensure plant material lives and prospers.
4. Planting plans shall be approved by Landscape Designer prior to installation.
5. Landscaping shall be required at the ends of all parking rows.
6. A low buffer shall be required where parking is within fifty (50) feet of the Right-of-Way.
7. Landscaped islands shall be a minimun width of twelve (12) feet (back of curb to back of curb) and a minimum of two hundred and sixteen (216) square feet.
8. A minimum of fifteen (15) trees 2 inches or greater in diameter as measured 6 inches above ground per disturbed acre.
9. For recommended Plant List see "Landscape" T-10.4.

LANDSCAPE NOTES
SD 15-14

	STANDARD DETAIL	CITY OF WILMINGTON ENGINEERING OFFICE 305 CHESTNUT STREET PO. BOX 1810 WILMINGTON N.C. 28402 (910) 341-7807
DATE: APRIL, 2008	LANDSCAPE NOTES	
DRAWN BY JSR		
CHECKED BY B.P., P.E.		
SCALE NOT TO SCALE		SD 15-14

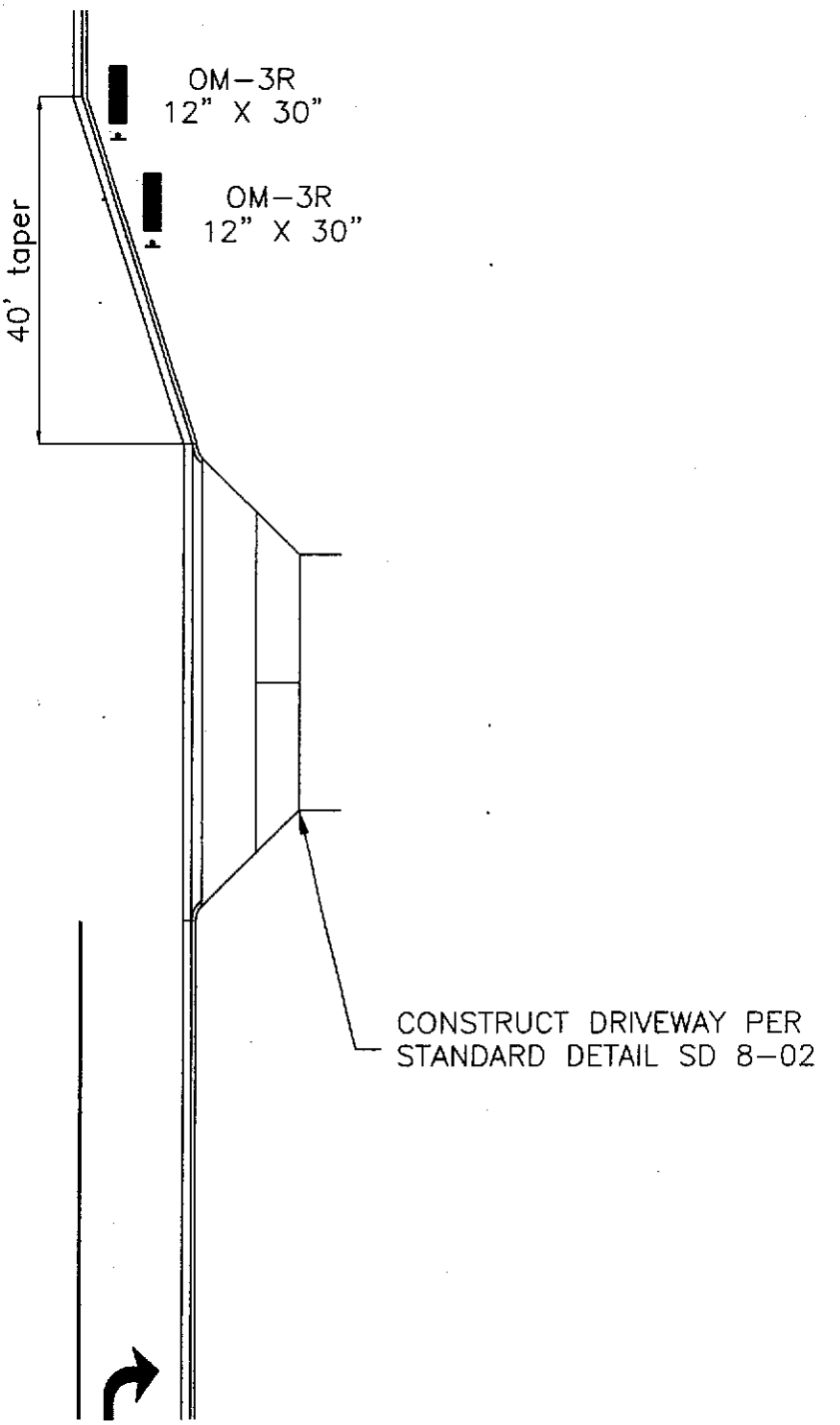

	STANDARD DETAIL	CITY OF WILMINGTON ENGINEERING OFFICE 305 CHESTNUT STREET PO. BOX 1810 WILMINGTON N.C. 28402 (910) 341-7807
DATE: 2003	STANDARD DRIVEWAY WITH RIGHT TURN BAY (DECELERATION LANE)	
DRAWN BY RB		
CHECKED BY B.P., P.E.		
SCALE NOT TO SCALE		SD 8-18

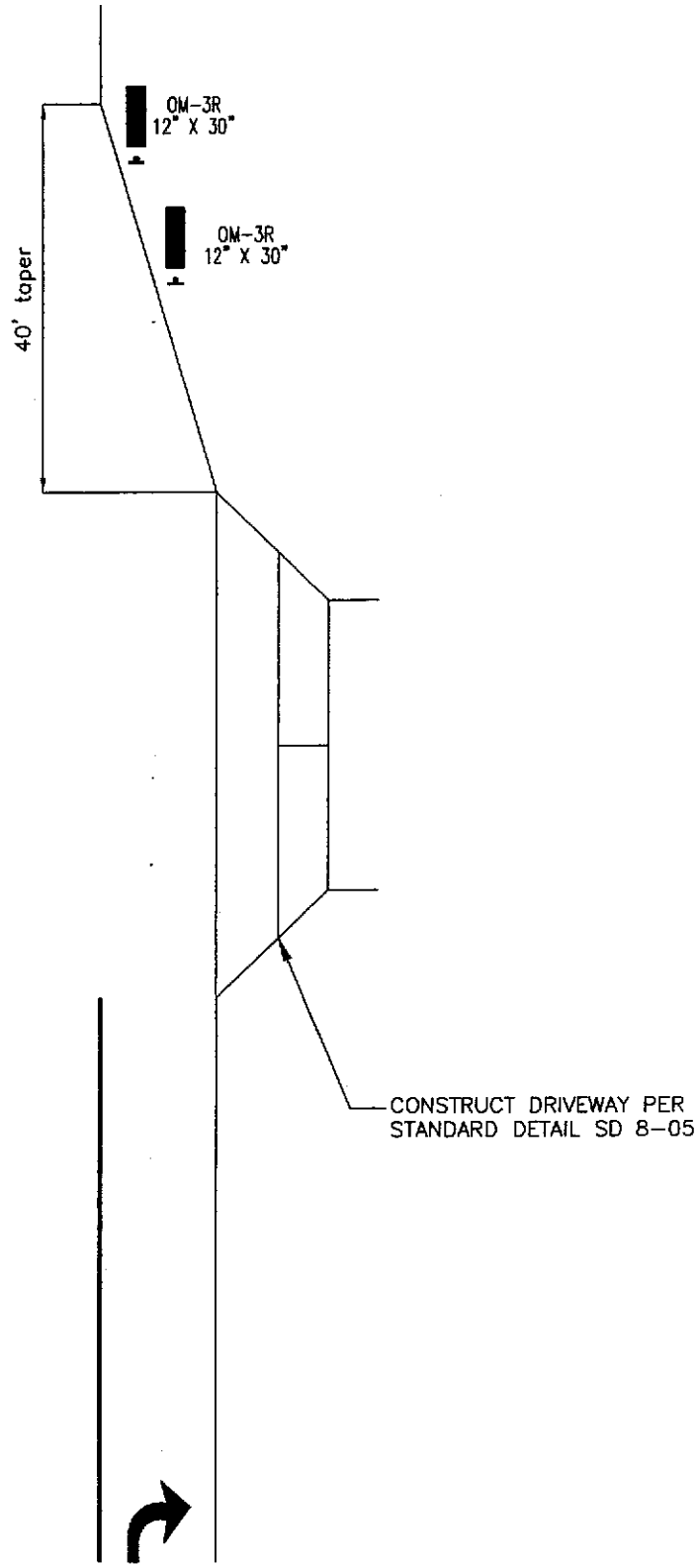

	STANDARD DETAIL	CITY OF WILMINGTON ENGINEERING OFFICE 305 CHESTNUT STREET PO. BOX 1810 WILMINGTON N.C. 28402 (910) 341-7807
DATE: 2003	STANDARD DRIVEWAY WITH RIGHT TURN BAY (DECELERATION LANE)	
DRAWN BY RB		
CHECKED BY B.P., P.E.		
SCALE NOT TO SCALE		SD 8-19

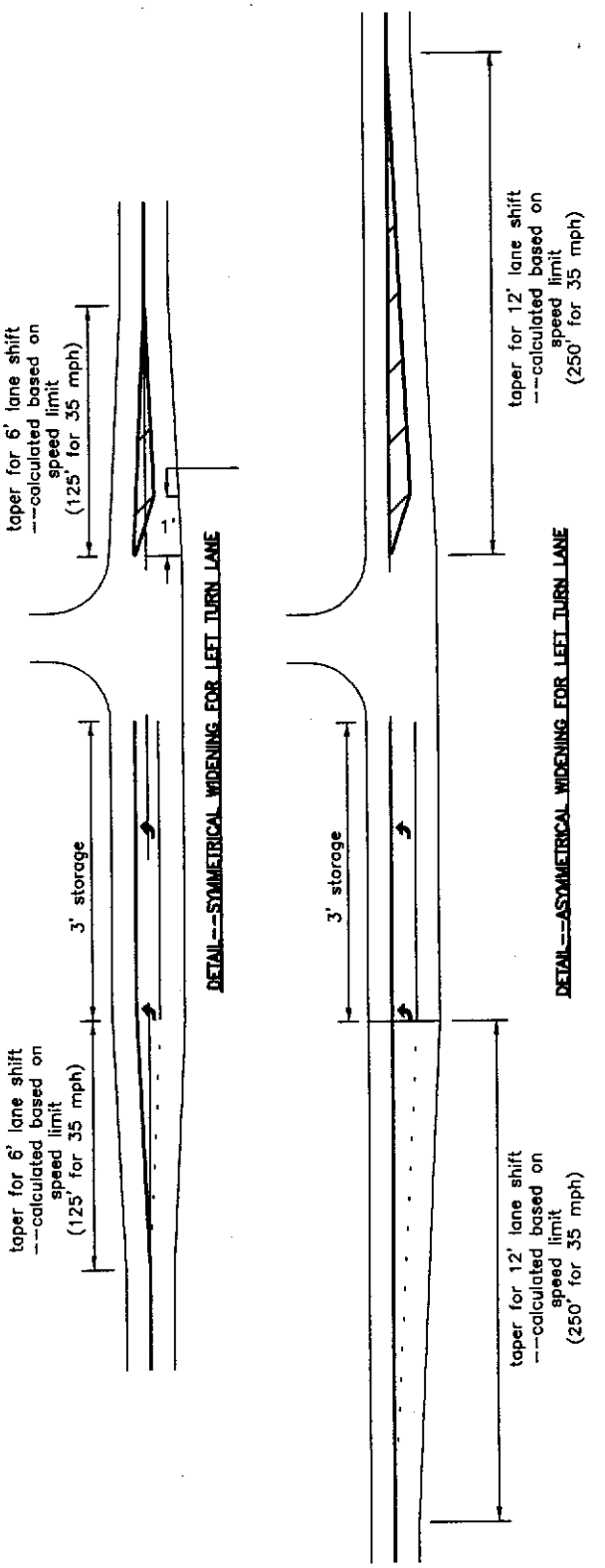

	STANDARD DETAIL	CITY OF WILMINGTON ENGINEERING OFFICE 305 CHESTNUT STREET PO. BOX 1810 WILMINGTON N.C. 28402 (910) 341-7807
DATE: 2003	WIDENING OF LEFT TURN LANE	
DRAWN BY RLB		
CHECKED BY JRF		
SCALE NOT TO SCALE		SD 8-20

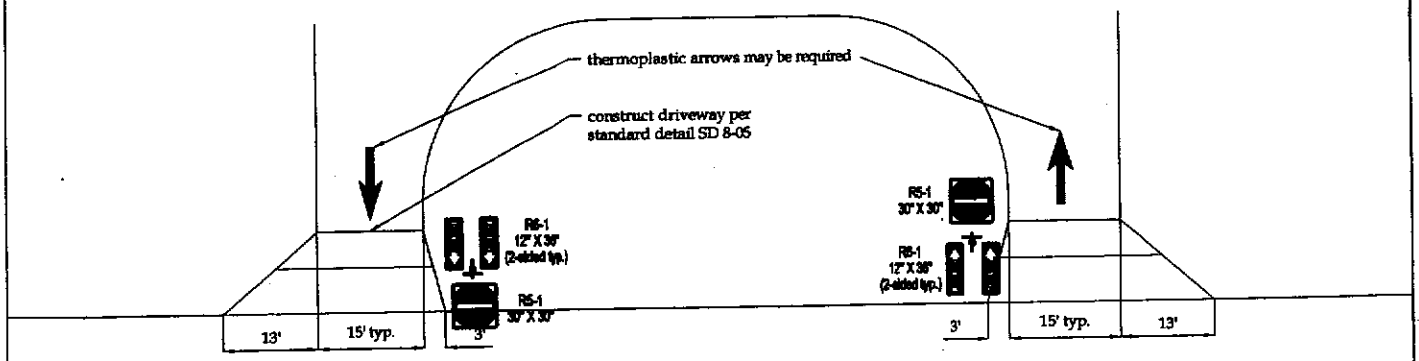

DETAIL--STANDARD ONE-WAY DRIVEWAY PAIR (no curb on street)

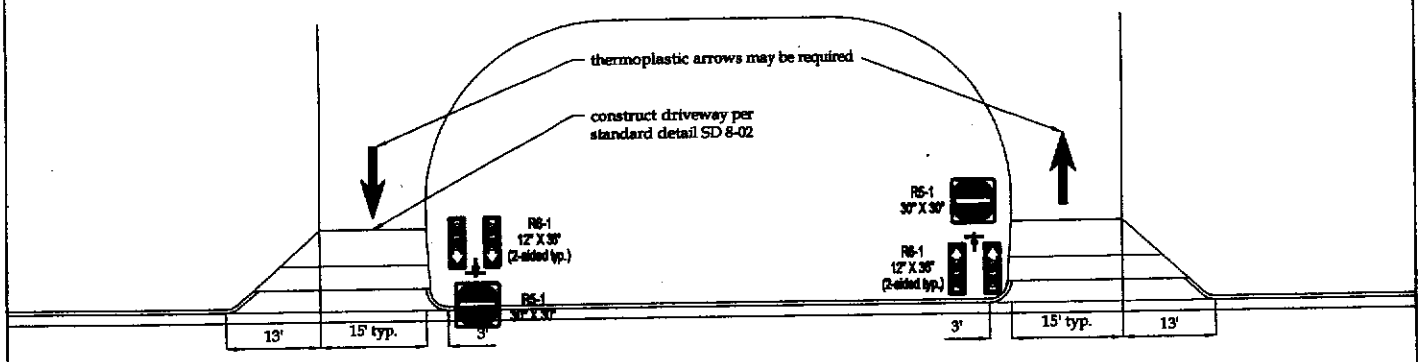

DETAIL--STANDARD ONE-WAY DRIVEWAY PAIR (curb on street)

	STANDARD DETAIL	CITY OF WILMINGTON ENGINEERING OFFICE 305 CHESTNUT STREET PO. BOX 1810 WILMINGTON N.C. 28402 (910) 341-7807
DATE: 2003	STANDARD ONE-WAY DRIVEWAY	
DRAWN BY RLB		
CHECKED BY JRF		
SCALE NOT TO SCALE		SD 8-21

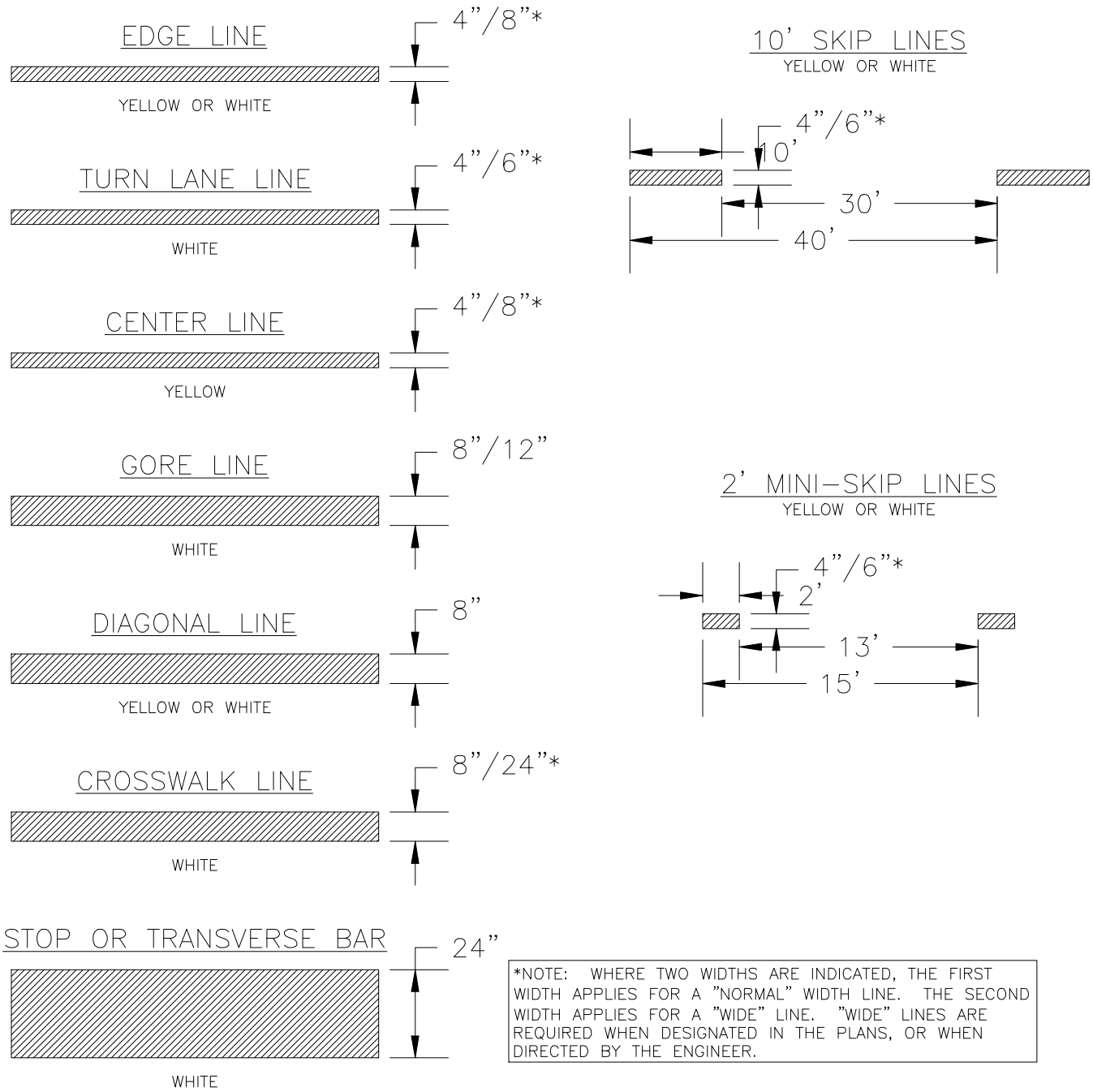

*NOTE: WHERE TWO WIDTHS ARE INDICATED, THE FIRST WIDTH APPLIES FOR A "NORMAL" WIDTH LINE. THE SECOND WIDTH APPLIES FOR A "WIDE" LINE. "WIDE" LINES ARE REQUIRED WHEN DESIGNATED IN THE PLANS, OR WHEN DIRECTED BY THE ENGINEER.

PAVEMENT MARKINGS
LINE TYPES
SD 11-01

	STANDARD DETAIL	
DATE: 2003	PAVEMENT MARKINGS LINE TYPES	CITY OF WILMINGTON ENGINEERING OFFICE 305 CHESTNUT STREET PO. BOX 1810 WILMINGTON N.C. 28402 (910) 341-7807
DRAWN BY RLB		
CHECKED BY RLB/JRF		
SCALE NOT TO SCALE		SD 11-01

LANE LINE OFFSET DETAIL

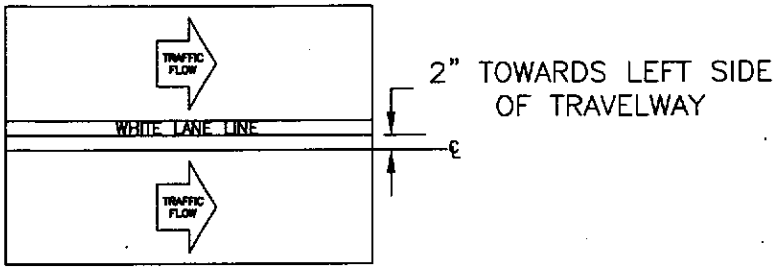

EDGE LINE OFFSET DETAIL

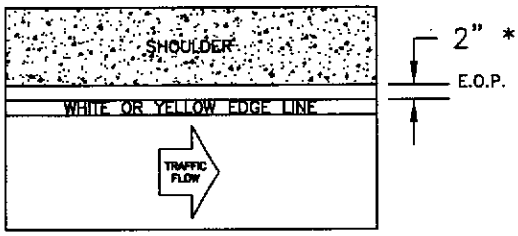

*REFER ALSO TO TABLE

CENTER LINE OFFSET DETAIL

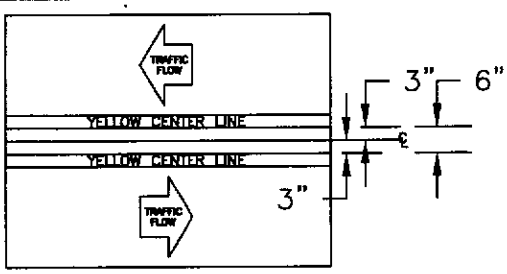

TABLE 1		
EDGE LINE OFFSETS FOR 2-LANE, 2-WAY ROADWAYS WITH UN-PAVED SHOULDERS		
WIDTH OF TRAVEL PAVEMENT	MAX. EDGE LINE OFFSET FROM E. O. P.	MINIMUM LANE WIDTH
16' – 20'	2"	8' – 10'
22'	2"	11'
24'	1'	11'
26'	2'	11'
28'	2'	12'
30'	3'	12'
32'	4'	12'

	STANDARD DETAIL	CITY OF WILMINGTON ENGINEERING OFFICE 305 CHESTNUT STREET PO. BOX 1810 WILMINGTON N.C. 28402 (910) 341-7807
DATE: 2003	PAVEMENT MARKINGS OFFSETS	
DRAWN BY RLB		
CHECKED BY RLB/JRF		
SCALE NOT TO SCALE		SD 11-02

RIGHT OR LEFT TURN ARROW

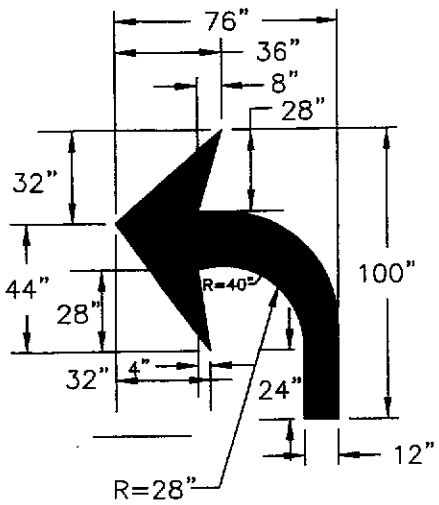

COMBINATION STRAIGHT AND LEFT OR RIGHT TURN ARROW

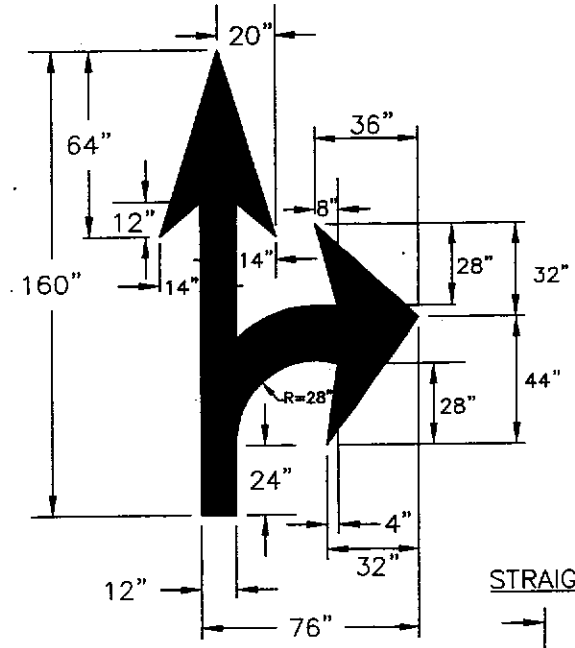

STRAIGHT ARROW

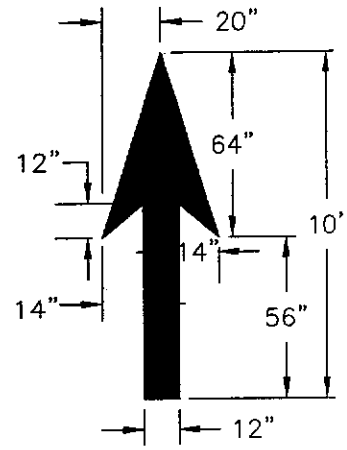

COMBINATION LEFT AND STRAIGHT AND RIGHT TURN ARROW

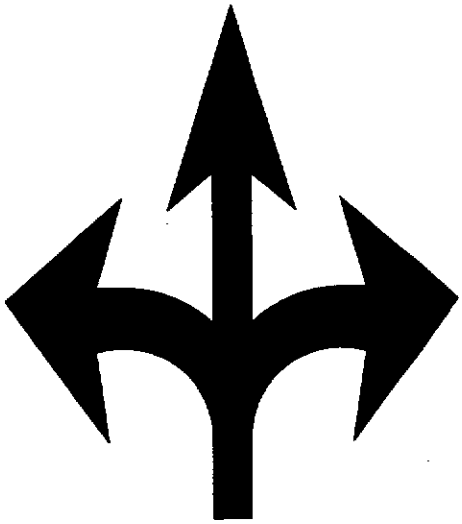

COMBINATION LEFT AND RIGHT TURN ARROW

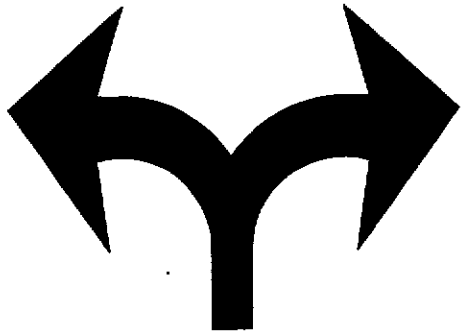

GENERAL NOTES

- ALL PAVEMENT MARKING SYMBOLS SHALL BE WHITE IN COLOR
- PAVEMENT MARKING SYMBOLS SHALL NOT BE LOCATED AS TO ENCROACH INTO INTERSECTION AREAS.
- ON PORTLAND CEMENT CONCRETE PAVEMENTS, PAVEMENT MARKING SYMBOLS SHALL NOT BE PLACED ACROSS TRANSVERSE EXPANSION JOINTS UNLESS APPROVED BY THE ENGINEER.

	STANDARD DETAIL	CITY OF WILMINGTON ENGINEERING OFFICE 305 CHESTNUT STREET PO. BOX 1810 WILMINGTON N.C. 28402 (910) 341-7807
DATE: 2003	PAVEMENT MARKINGS ARROW SYMBOLS	
DRAWN BY RLB		
CHECKED BY RLB/JRF		
SCALE NOT TO SCALE		SD 11-03

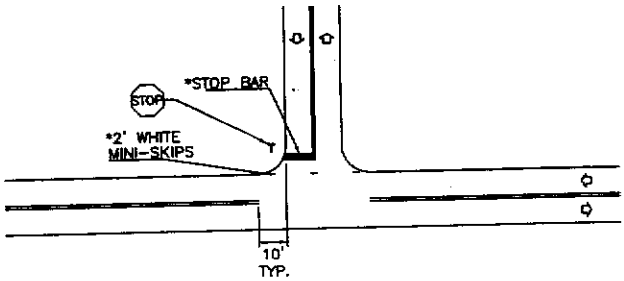

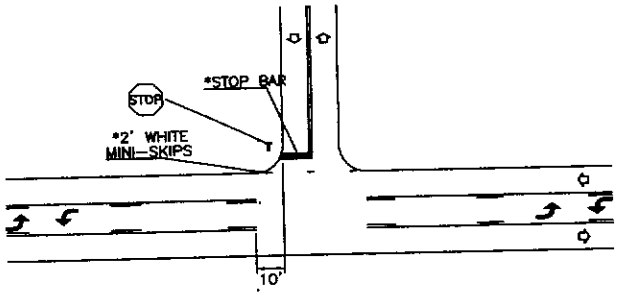

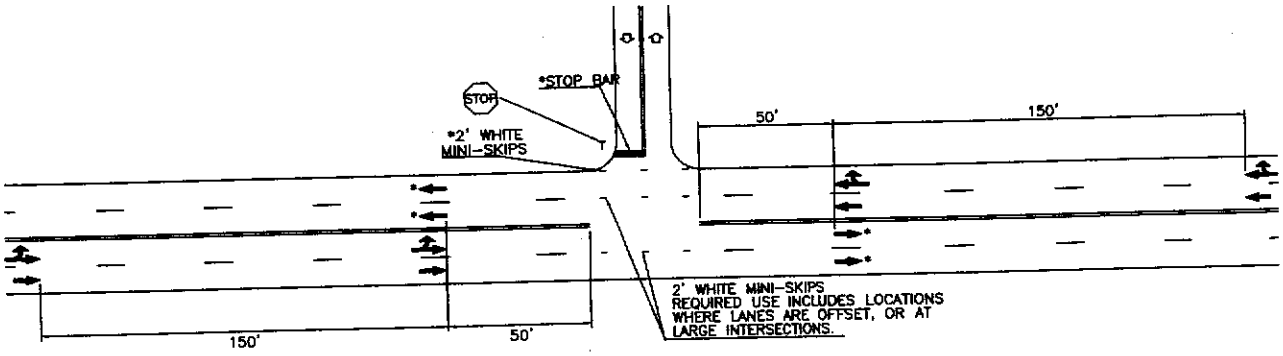

LEGEND

- DIRECTION OF TRAFFIC FLOW
- PAVEMENT MARKING SYMBOLS
- * OPTIONAL

	STANDARD DETAIL	CITY OF WILMINGTON ENGINEERING OFFICE 305 CHESTNUT STREET PO. BOX 1810 WILMINGTON N.C. 28402 (910) 341-7807
DATE: 2003	PAVEMENT MARKINGS NON-SIGNALIZED INTERSECTIONS	
DRAWN BY RLB		
CHECKED BY RLB/JRF		
SCALE NOT TO SCALE		SD 11-04

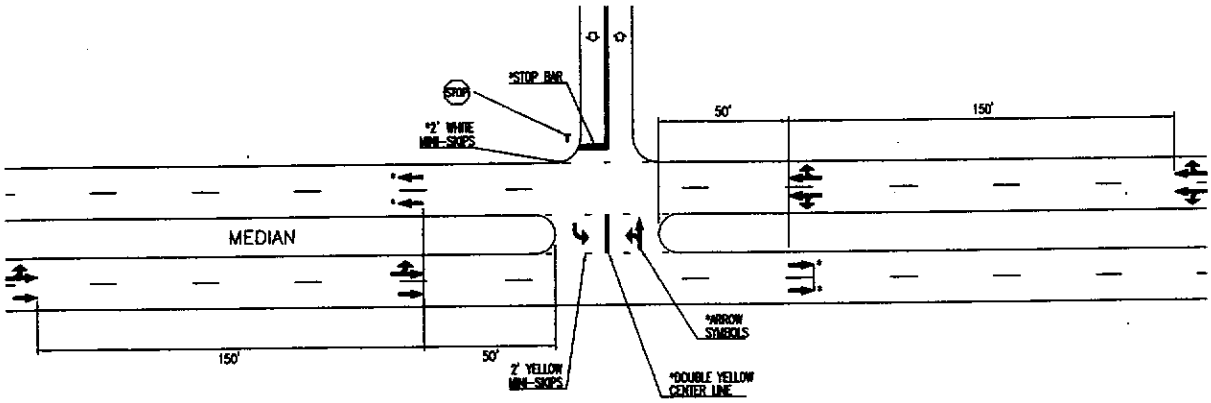

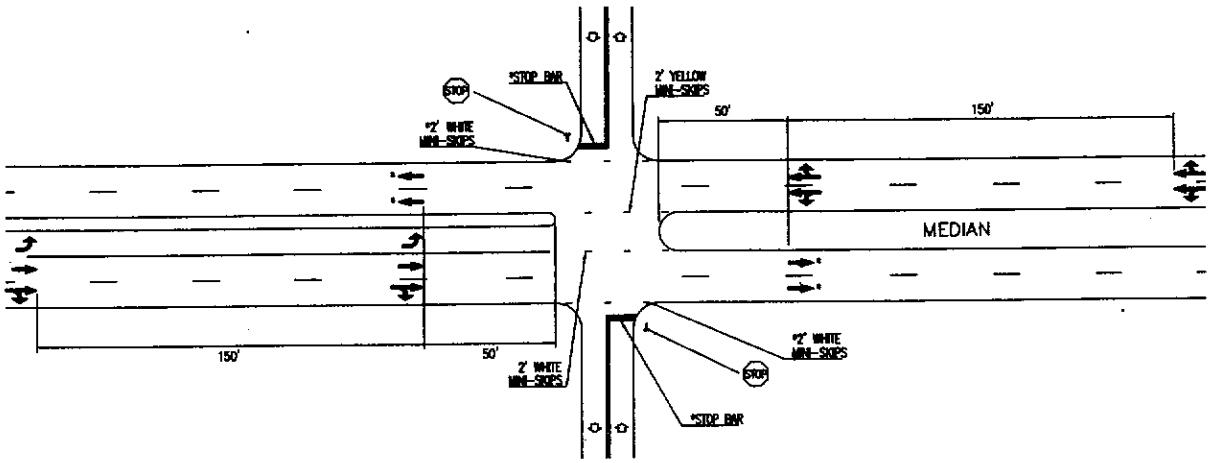

LEGEND

- DIRECTION OF TRAFFIC FLOW
- PAVEMENT MARKING SYMBOLS
- * OPTIONAL

	STANDARD DETAIL	CITY OF WILMINGTON ENGINEERING OFFICE 305 CHESTNUT STREET PO. BOX 1810 WILMINGTON N.C. 28402 (910) 341-7807
DATE: 2003	PAVEMENT MARKINGS NON-SIGNALIZED INTERSECTIONS	
DRAWN BY RLB		
CHECKED BY RLB/JRF		
SCALE NOT TO SCALE		SD 11-05

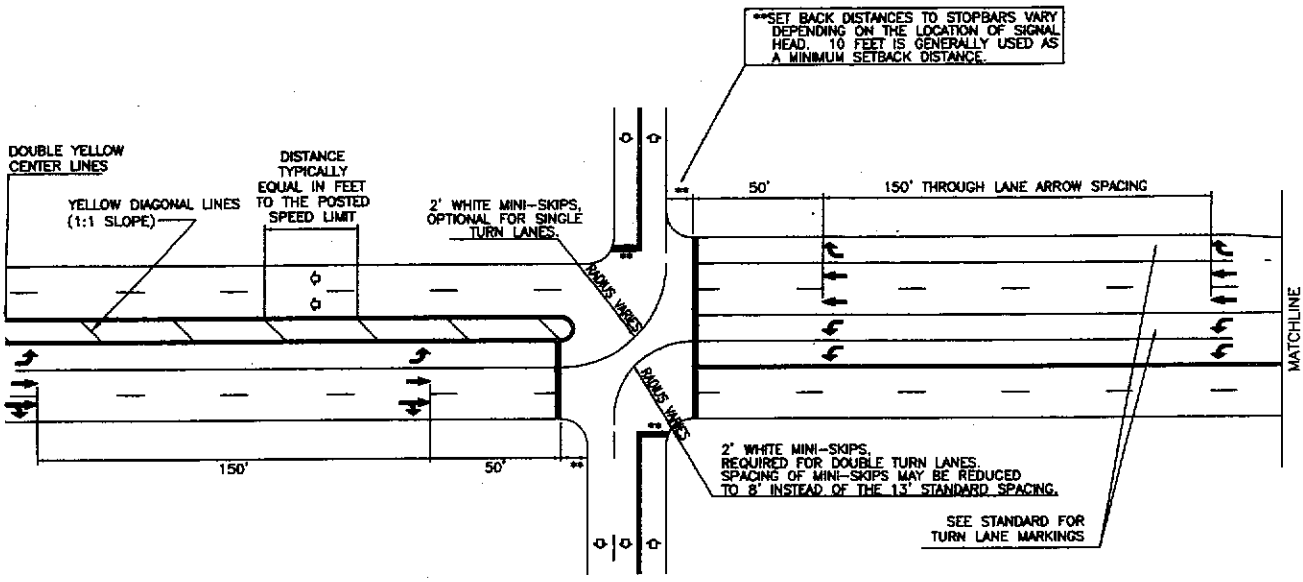

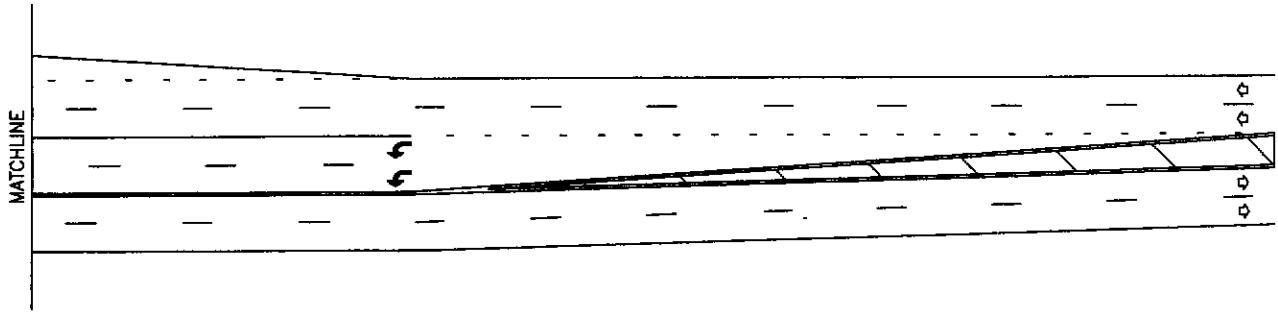

LEGEND

- DIRECTION OF TRAFFIC FLOW
- PAVEMENT MARKING SYMBOLS
- * OPTIONAL

DATE: 2003	STANDARD DETAIL	CITY OF WILMINGTON ENGINEERING OFFICE 305 CHESTNUT STREET PO. BOX 1810 WILMINGTON N.C. 28402 (910) 341-7807
DRAWN BY RLB	PAVEMENT MARKINGS SIGNALIZED INTERSECTIONS	
CHECKED BY DRB/JRG		
SCALE NOT TO SCALE		SD 11-06

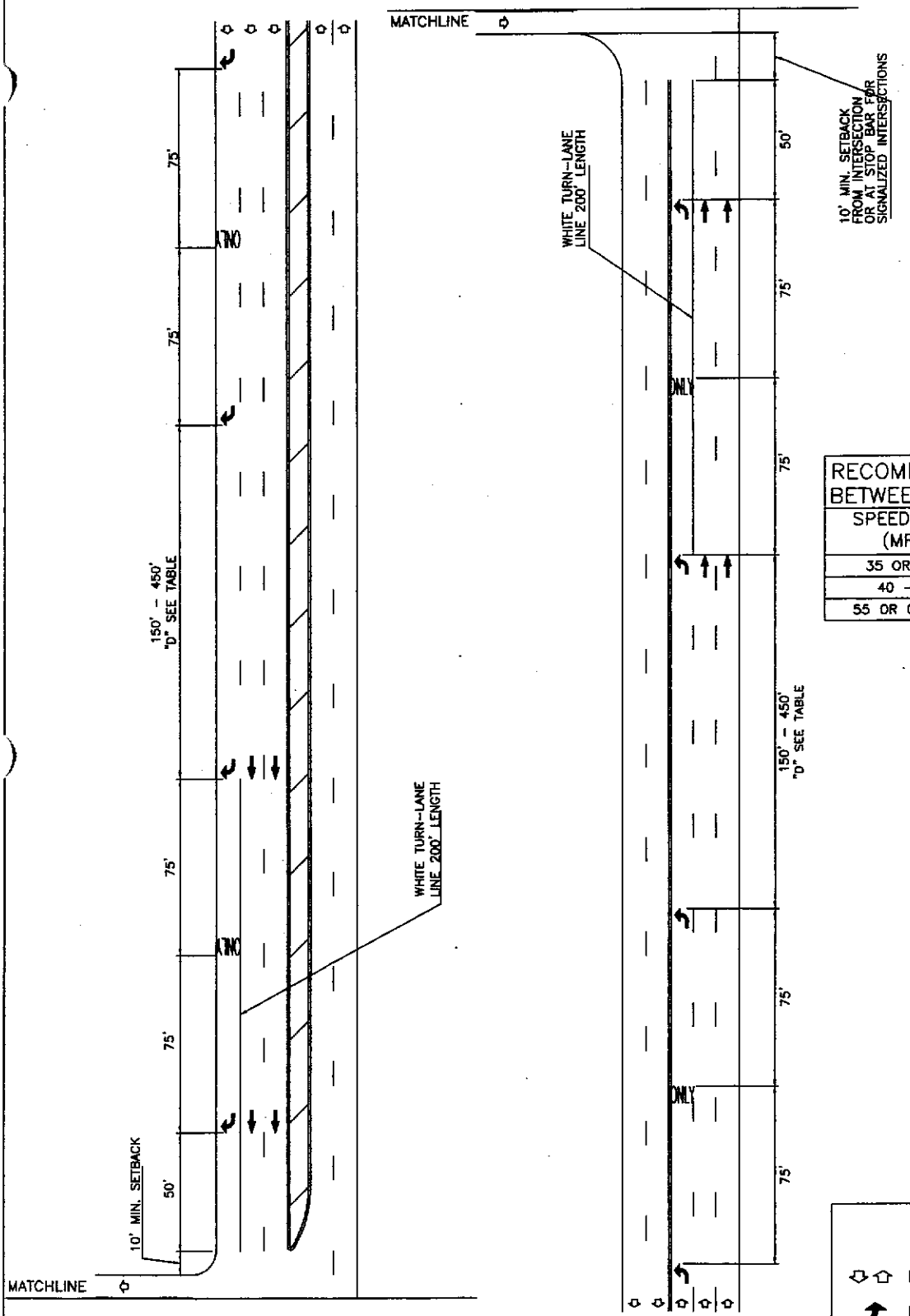

RECOMMENDED SPACING "D" BETWEEN SETS OF SYMBOLS	
SPEED LIMIT (MPH)	SPACING
35 OR LESS	150'
40 – 50	200'
55 OR GREATER	450'

LEGEND

DIRECTION OF TRAFFIC FLOW

PAVEMENT MARKING SYMBOLS

STANDARD DETAIL

DATE: 2003

DRAWN BY RLB

CHECKED BY DRB/JRF

SCALE NOT TO SCALE

PAVEMENT MARKINGS THROUGH-LANE DROP AT INTERSECTION

CITY OF WILMINGTON
ENGINEERING OFFICE
305 CHESTNUT STREET
PO. BOX 1810
WILMINGTON N.C. 28402
(910) 341-7807

SD 11-07

DIRECT TAPER TURN LANE

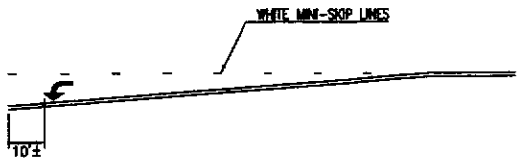

TURN LANE BAYS < 125'

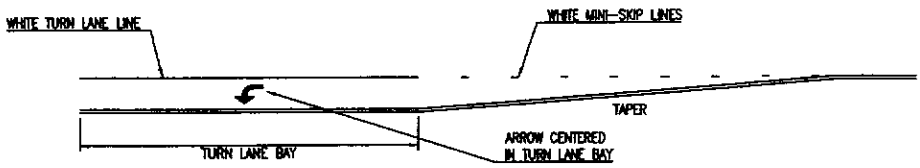

TURN LANE BAYS 125' -250'

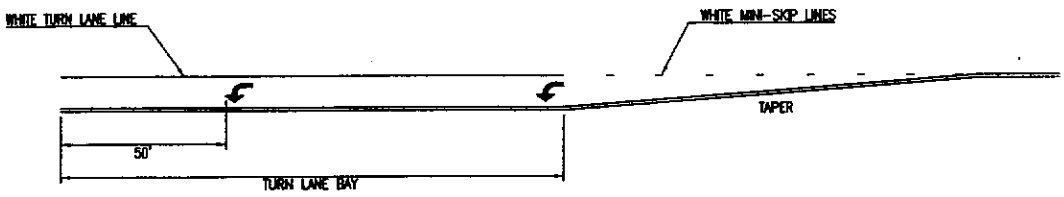

TURN LANE BAYS > 250'

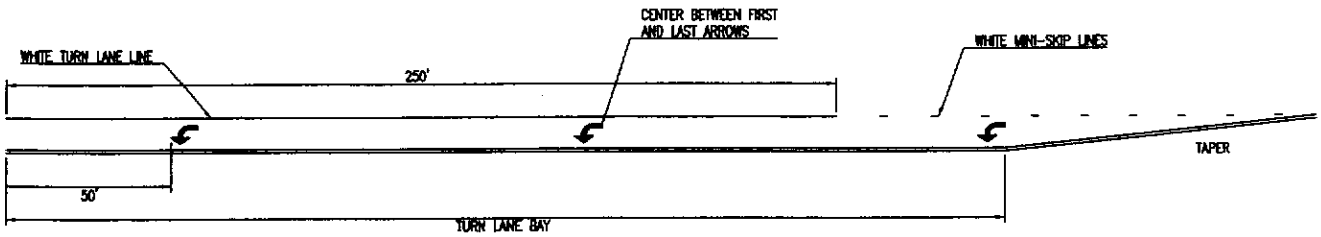

	STANDARD DETAIL	CITY OF WILMINGTON ENGINEERING OFFICE 305 CHESTNUT STREET PO. BOX 1810 WILMINGTON N.C. 28402 (910) 341-7807
DATE: 2001	PAVEMENT MARKINGS TURN LANES	
DRAWN BY RLB		
CHECKED BY DRB/JRF		
SCALE NOT TO SCALE		SD 11-08

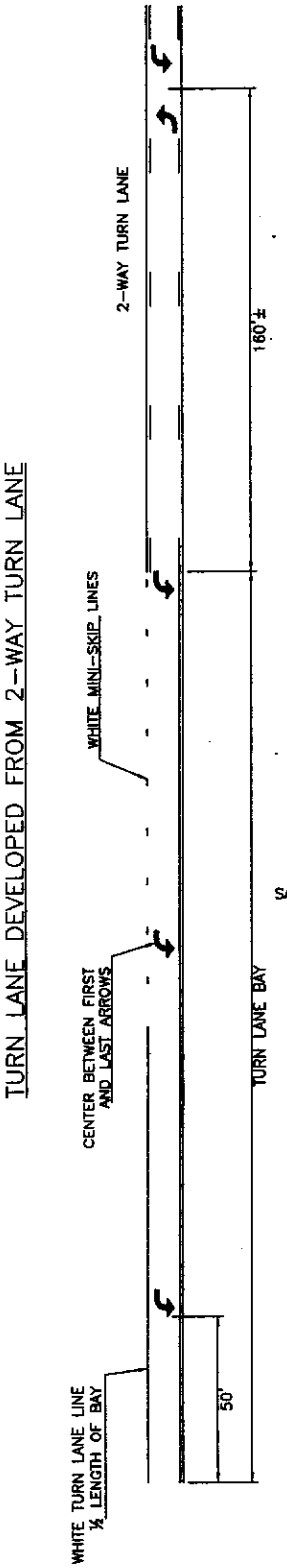

SAME PAVEMENT MARKING LINES, NUMBER OF ARROWS, AND ARROW SPACING APPLY AS FOR THE VARIOUS TURN LANE BAY LENGTHS SHOWN IN SD 16-08

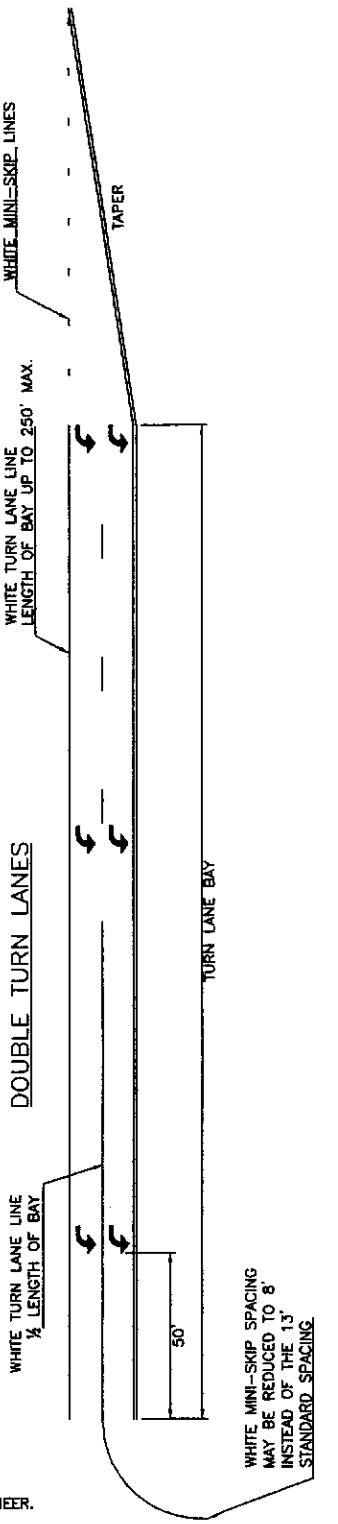

GENERAL NOTES

- ALL TURN LANE MARKINGS SHOWN APPLY FOR RIGHT AND LEFT TURN LANES.
- NUMBER OF ARROWS SHOWN IS THE MINIMUM REQUIRED. ADDITIONAL ARROWS MAY BE USED AS DETERMINED BY THE ENGINEER.

DATE: 2003	STANDARD DETAIL	CITY OF WILMINGTON ENGINEERING OFFICE 305 CHESTNUT STREET PO. BOX 1810 WILMINGTON N.C. 28402 (910) 341-7807
DRAWN BY RLB	PAVEMENT MARKINGS TURN LANES	
CHECKED BY DRB/JRF		
SCALE NOT TO SCALE		SD 11-09

PAVEMENT MARKER SPACING CHART

TYPE OF PAVEMENT MARKING	TYPICAL SPACING in FT (speed limit <= 45mph)
Centerlines--along through lanes	40
Centerlines--along horizontal curves	per Traffic Engineering
Skip Lines--along through lanes	40
Turn Lanes--Skip Lines	40
Turn Lanes--Solid Lane Lines	20
Turn Lanes--Centerlines	40
Painted Islands--White	20
Painted Islands--Yellow	40
Raised Median Islands	40
Other Markings	per Traffic Engineering

GENERAL NOTES

- CRYSTAL/RED MARKERS SHALL BE USED ALONG WHITE PAVEMENT MARKINGS UNLESS OTHERWISE DIRECTED BY TRAFFIC ENGINEERING. RED SIDE OF MARKER TO FACE "WRONG-WAY" TRAFFIC.
- PAVEMENT MARKERS SHOULD NOT BE PLACED CLOSER THAN 2 INCHES TO A PAVEMENT CONSTRUCTION JOINT, EXCEPT WHEN PLACED BETWEEN DOUBLE YELLOW CENTERLINES.
- PAVEMENT MARKERS SHALL NOT BE PLACED DIRECTLY ON PAVEMENT MARKINGS.
- PAVEMENT MARKERS USED IN CONJUNCTION WITH DOUBLE YELLOW CENTERLINES SHALL BE PLACED MID-WAY BETWEEN THE LINES, WITH A GAP BETWEEN MARKER AND MARKINGS.

PLACEMENT ALONG YELLOW CENTERLINES

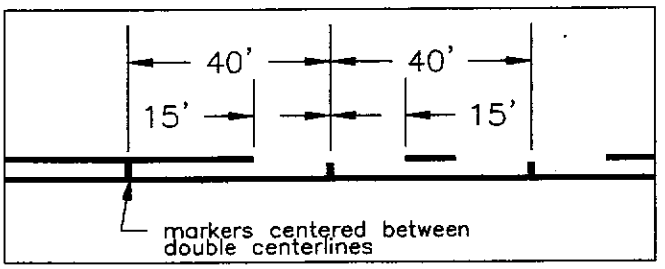

PLACEMENT ALONG TURN LANE LINES

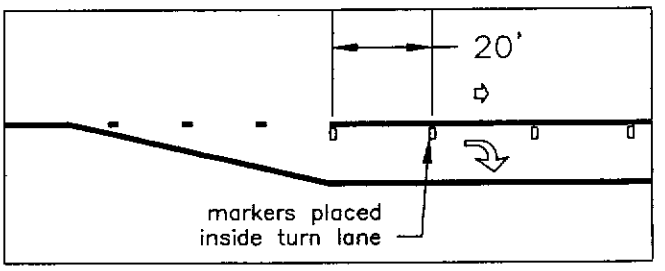

PLACEMENT ALONG WHITE SKIP LINES

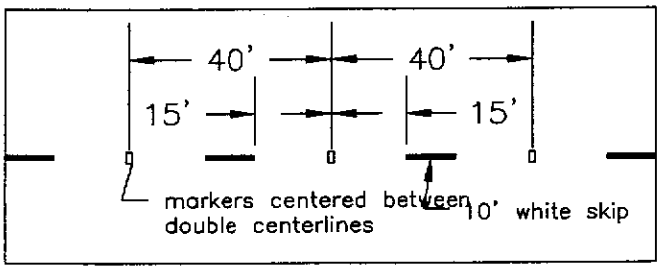

LEGEND

- DIRECTION OF TRAFFIC FLOW
- AMBER / AMBER MARKER
- CRYSTAL / RED MARKER

DATE:	2003
DRAWN BY	RLB
CHECKED BY	DRB/JRF
SCALE	NOT TO SCALE

STANDARD DETAIL

PAVEMENT MARKINGS RAISED PAVEMENT MARKERS

CITY OF WILMINGTON
ENGINEERING OFFICE
305 CHESTNUT STREET
PO. BOX 1810
WILMINGTON N.C. 28402
(910) 341-7807

SD 11-10

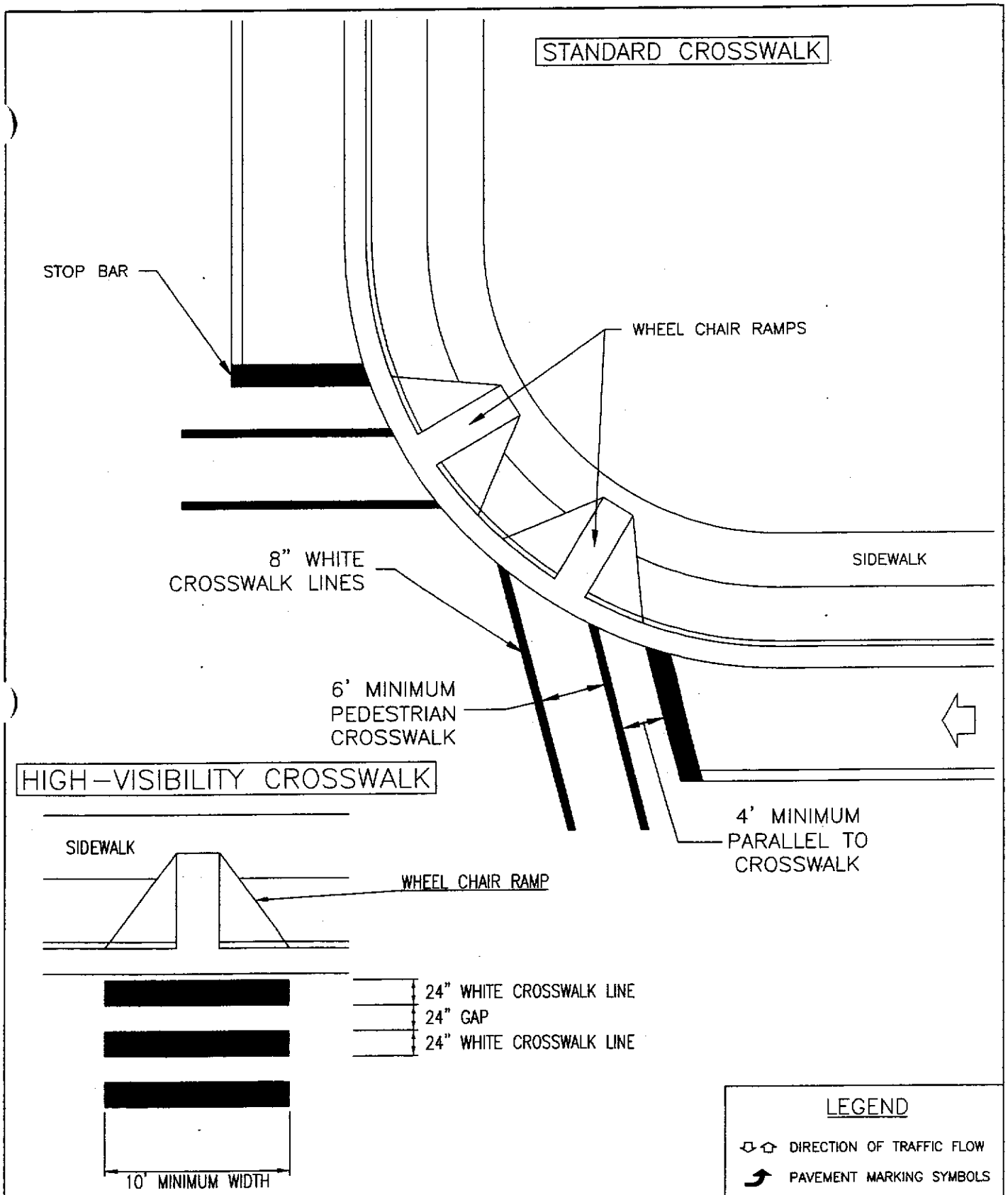

	STANDARD DETAIL	CITY OF WILMINGTON ENGINEERING OFFICE 305 CHESTNUT STREET PO. BOX 1810 WILMINGTON N.C. 28402 (910) 341-7807
DATE: 2001	PAVEMENT MARKINGS WHEEL CHAIR RAMPS	
DRAWN BY RLB		
CHECKED BY DRB/JRF		
SCALE NOT TO SCALE		SD 11-11

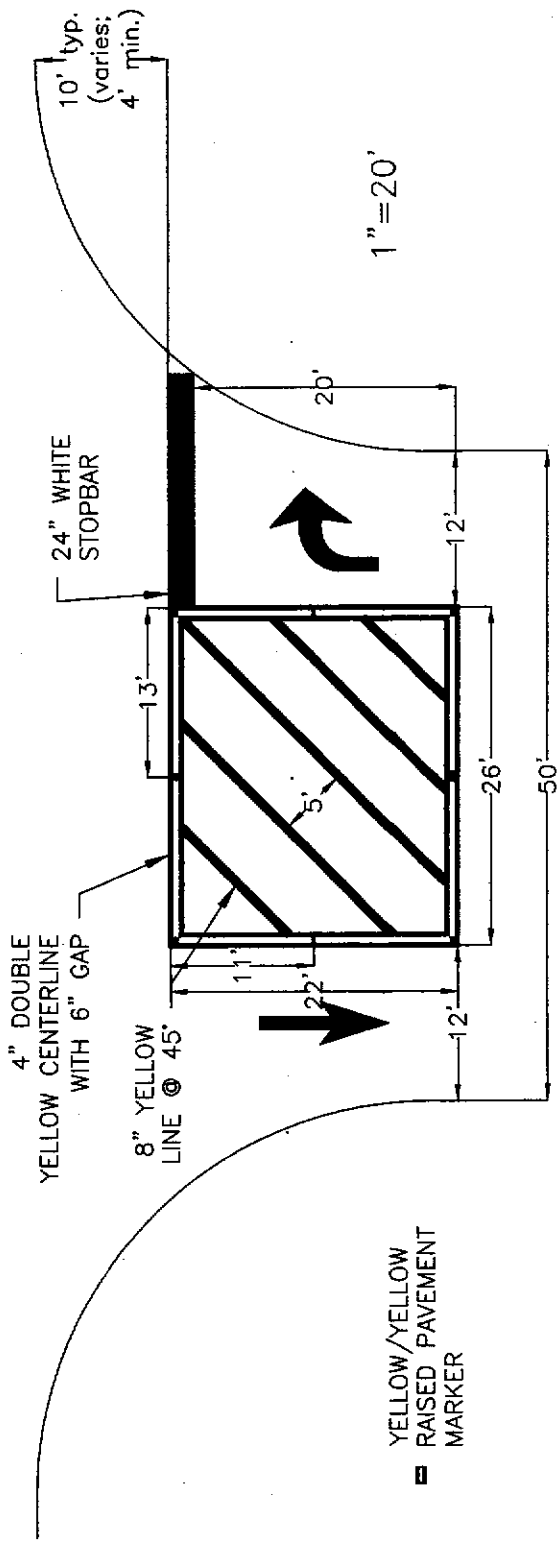

	STANDARD DETAIL	CITY OF WILMINGTON ENGINEERING OFFICE 305 CHESTNUT STREET PO. BOX 1810 WILMINGTON N.C. 28402 (910) 341-7807
DATE: 2003	THERMOPLASTIC PAVEMENT MARKINGS - 50' DRIVEWAY (NO LEFT TURN)	
DRAWN BY RLB		
CHECKED BY JRF		
SCALE NOT TO SCALE		SD 11-12

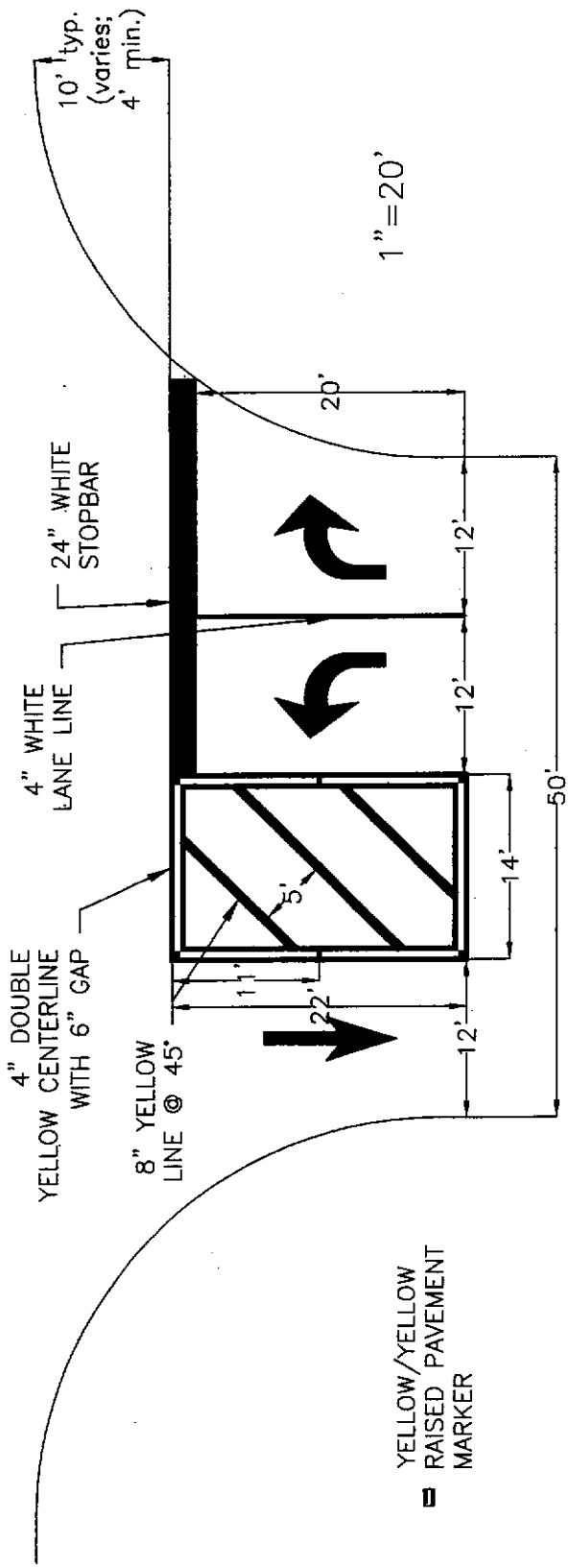

	STANDARD DETAIL	CITY OF WILMINGTON ENGINEERING OFFICE 305 CHESTNUT STREET PO. BOX 1810 WILMINGTON N.C. 28402 (910) 341-7807
DATE: 2003	THERMOPLASTIC PAVEMENT MARKINGS-50' DRIVEWAY	
DRAWN BY RLB		
CHECKED BY JRF		
SCALE NOT TO SCALE		SD 11-13 SHEET 1 of 2

THERMOPLASTIC PAVEMENT
MARKINGS-50' DRIVEWAY
SD 11-13

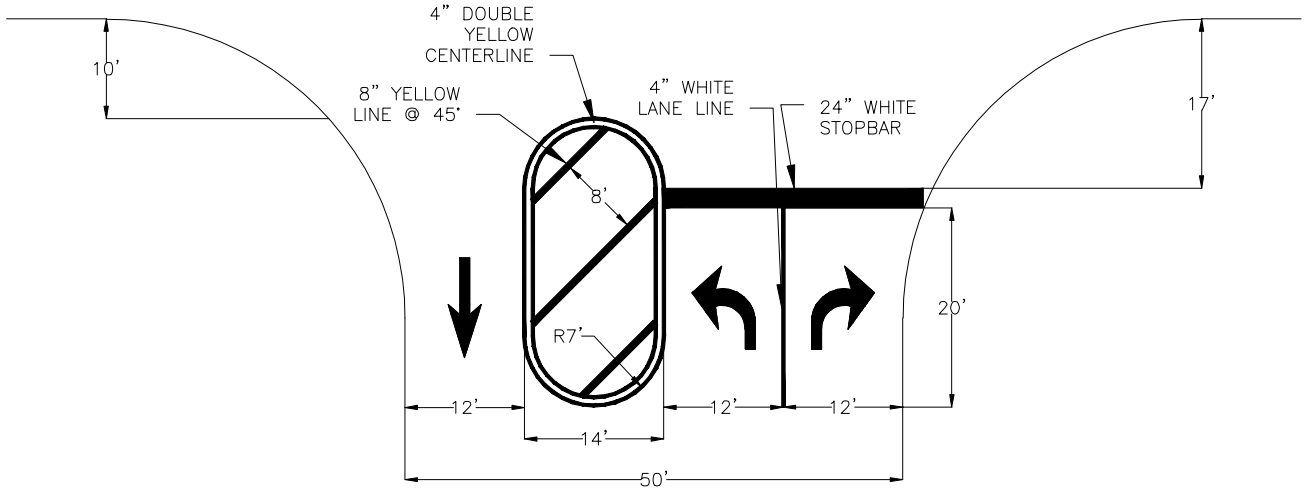

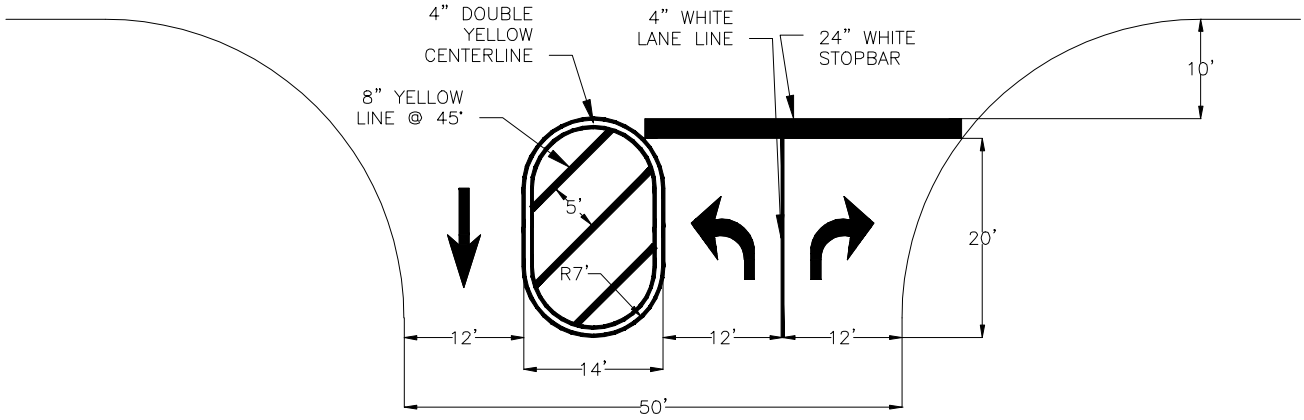

	STANDARD DETAIL	CITY OF WILMINGTON ENGINEERING OFFICE 305 CHESTNUT STREET PO. BOX 1810 WILMINGTON N.C. 28402 (910) 341-7807
DATE: 2003	THERMOPLASTIC PAVEMENT MARKINGS-50' DRIVEWAY	
DRAWN BY RLB		
CHECKED BY JRF		
SCALE NOT TO SCALE		SD 11-13 SHEET 2 OF 2

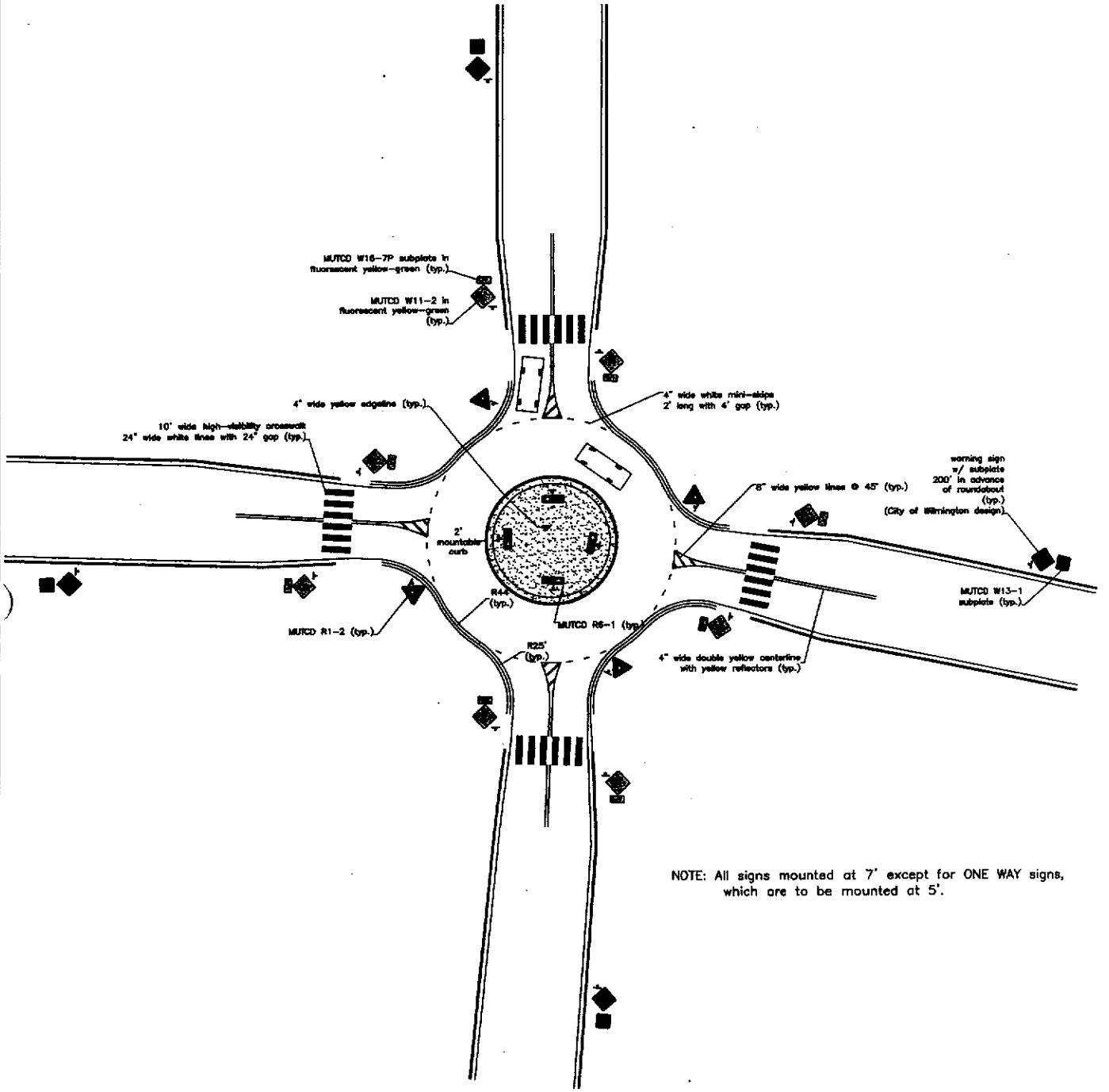

NOTE: All signs mounted at 7' except for ONE WAY signs, which are to be mounted at 5'.

	STANDARD DETAIL	CITY OF WILMINGTON ENGINEERING OFFICE 305 CHESTNUT STREET PO. BOX 1810 WILMINGTON N.C. 28402 (910) 341-7807
DATE: 2003	PAVEMENT MARKINGS ROUNDABOUT	
DRAWN BY RLB		
CHECKED BY JRF		
SCALE NOT TO SCALE		SD 11-14

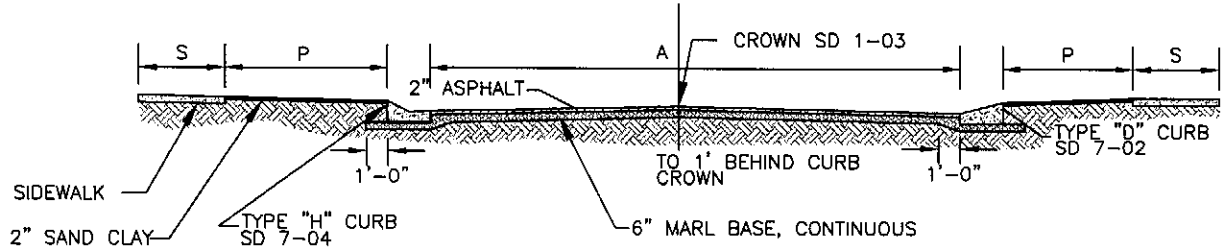

NOTE:

1. Included in the grading for a street is the proper protection of fills and cuts beyond the right-of-way (cut section slope 1.5/1; fill section slope 2:1)

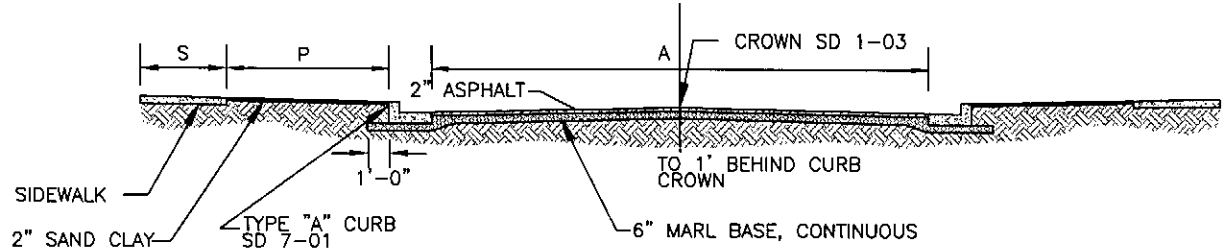

STREET NOTES:

1. Residential collectors may be a minimum of 24' wide from curb face to curb face when a separate bicycle facility is provided.
2. If on-street parking is approved, then add 7' of pavement width per parking lane.
3. Additional width may be required at intersections or major driveways for turn lanes or bays.
4. Pavement markings are required and shall include centerline, bike lanes, and parking lanes, where applicable.
5. Vertical curb (type "A") shall be used on collector streets.

		R-O-W	DIMENSIONS WITH TYPE "A" CURB			DIMENSIONS WITH TYPE "D" CURB			DIMENSIONS WITH TYPE "H" CURB		
			ASPHALT (A)	PLAZA (P)	SIDEWALK (S)	ASPHALT (A)	PLAZA (P)	SIDEWALK (S)	ASPHALT (A)	PLAZA (P)	SIDEWALK (S)
COLLECTOR	NON-RESIDENTIAL	60'	33'	6'	5'	NA	NA	5'	NA	NA	5'
	RESIDENTIAL	60'	29'	8'	5'	NA	NA	5'	NA	NA	5'
LOCAL (RESIDENTIAL)	≤ 50 UNITS	50'	23'	6'	5'	26'	5'	5'	24'	6'	5'
	≤ 15 UNITS	40'	15'	5'	5'	18'	4'	5'	16'	5'	5'
ALLEY		20'	-14' of asphalt with 1' header curb and 1' plaza, additional easement may be required for utilities								
PRIVATE ACCESS EASEMENT		34' EAS.	-16' of paved surface, 10' for utility and/or stormwater								

STANDARD STREET SECTION
SD 1-01

STANDARD DETAIL

STANDARD STREET SECTION

DATE: 2003
DRAWN BY RLB
CHECKED BY W.C.P., P.E.
SCALE NOT TO SCALE

CITY OF WILMINGTON
ENGINEERING OFFICE
305 CHESTNUT STREET
PO. BOX 1810
WILMINGTON N.C. 28402
(910) 341-7807

SD 1-01

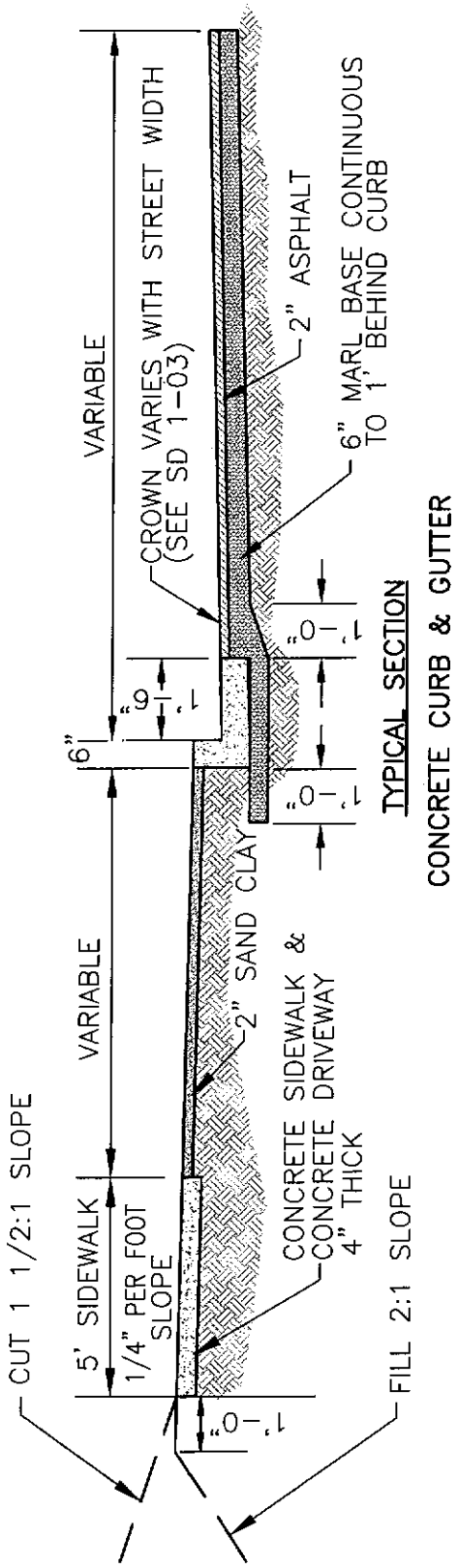

TYPICAL SECTION

CONCRETE CURB & GUTTER

NOTES:

*COMBINED CONCRETE CURB & GUTTER, CONCRETE SIDEWALK AND DRIVEWAYS TO BE 3000 POUNDS STRENGTH CONCRETE.
*SCORE JOINTS TO BE PLACED EVERY 5' ACROSS SIDEWALK, IN SIDEWALK AREA OF DRIVEWAYS.
*EXPANSION JOINTS TO BE PLACED ACROSS SIDEWALK EVERY 30'.
*EXPANSION JOINTS TO BE PLACED BETWEEN: SIDEWALK AND CURB, SIDEWALK AND DRIVEWAY, AND DRIVEWAY AND CURB RETURN WHERE THEY ADJOIN.

STANDARD STREET SECTION

SD 1-02

	STANDARD DETAIL	CITY OF WILMINGTON ENGINEERING OFFICE 305 CHESTNUT STREET PO. BOX 1810 WILMINGTON N.C. 28402 (910) 341-7807
DATE: 2001	STANDARD STREET SECTION	
DRAWN BY JSR/CMR		
CHECKED BY B.P., P.E.		
SCALE NOT TO SCALE		SD 1-02

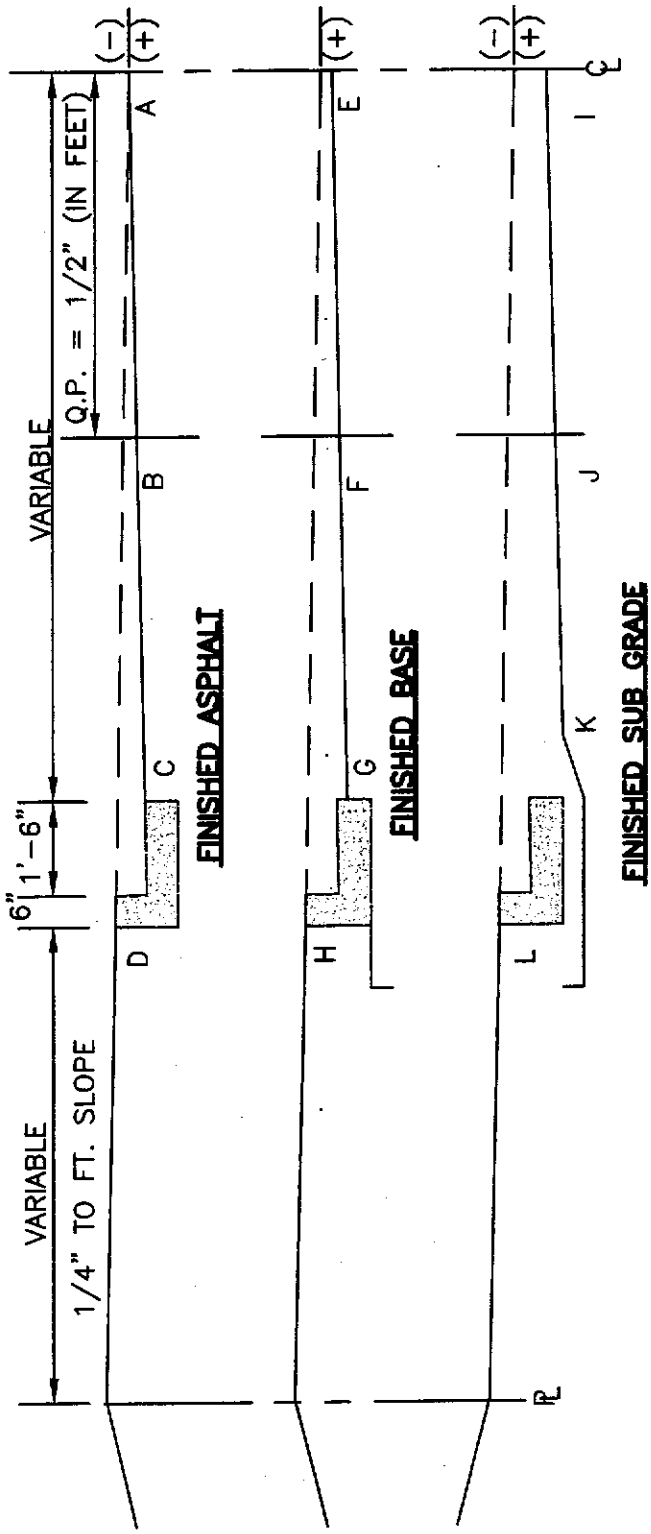

STREET WIDTH	PARABOLIC CROWN (FOOT)	ELEVATION DIFFERENCE (+) = BELOW T. C. (−) = ABOVE T. C.											
		A	B	C	D	E	F	G	H	I	J	K	L
24',27'	0.30'	0.20'	0.26'	0.44'	0.00'	0.37'	0.42'	0.60'	1.00'	0.70'	0.76'	1.27'	1.33'
30',33'	0.42'	0.08'	0.19'	0.44'	0.00'	0.25'	0.35'	0.60'	1.00'	0.58'	0.69'	1.27'	1.33'
36',48'	0.50'	0.00'	0.13'	0.44'	0.00'	0.17'	0.30'	0.60'	1.00'	0.50'	0.63'	1.27'	1.33'

STANDARD DETAIL

DATE: 2001

DRAWN BY JSR/CMR

CHECKED BY B.P., P.E.

SCALE NOT TO SCALE

STANDARD STREET SECTION (CROWN DATA)

CITY OF WILMINGTON
ENGINEERING OFFICE
305 CHESTNUT STREET
PO. BOX 1810
WILMINGTON N.C. 28402
(910) 341-7807

SD 1-03

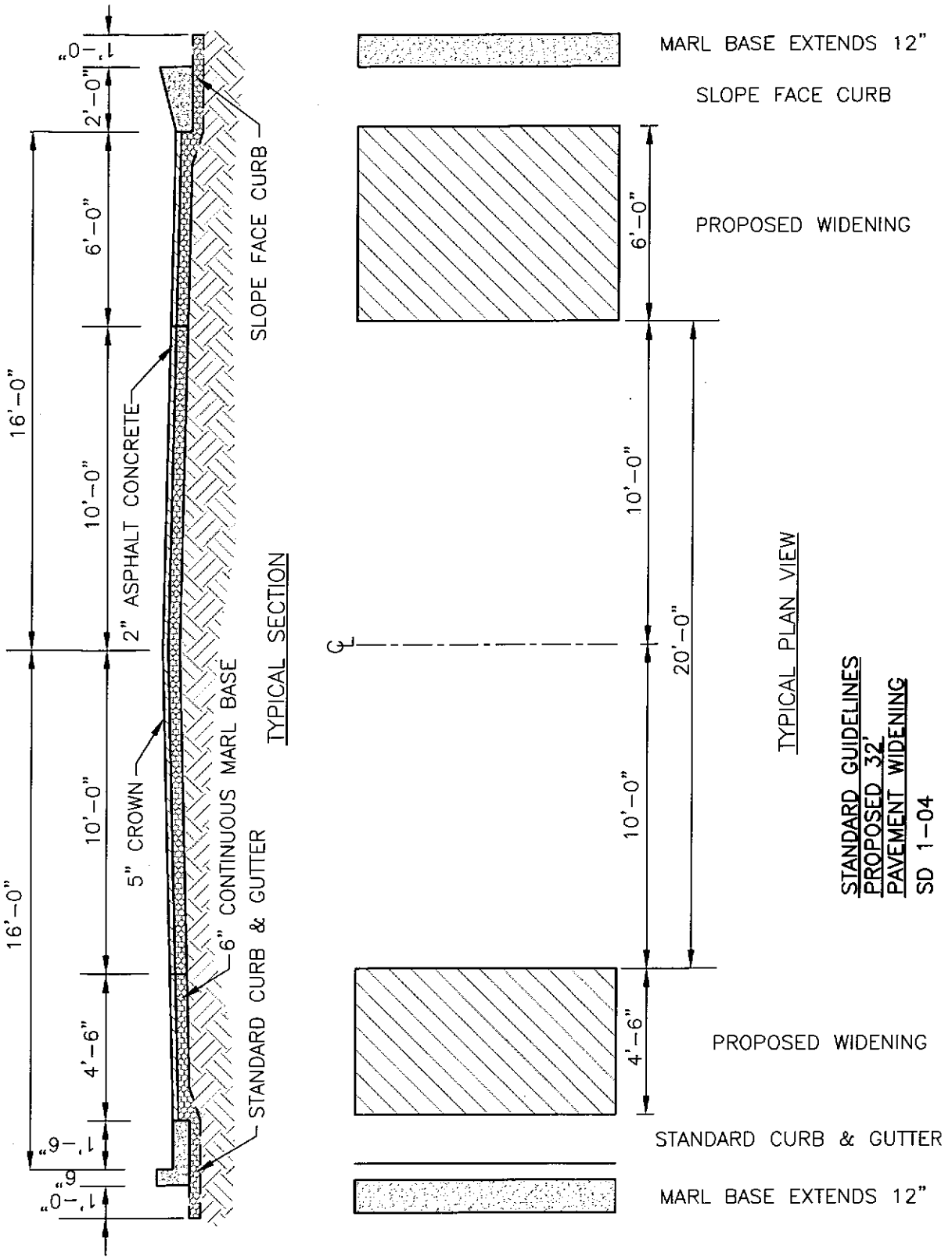

STANDARD GUIDELINES
PROPOSED 32'
PAVEMENT WIDENING
SD 1-04

	STANDARD DETAIL	CITY OF WILMINGTON ENGINEERING OFFICE 305 CHESTNUT STREET PO. BOX 1810 WILMINGTON N.C. 28402 (910) 341-7807
DATE: 2001	STANDARD GUIDELINES PROPOSED 32' PAVEMENT WIDENING	
DRAWN BY JSR/CMR		
CHECKED BY B.P., P.E.		
SCALE NOT TO SCALE		SD 1-04

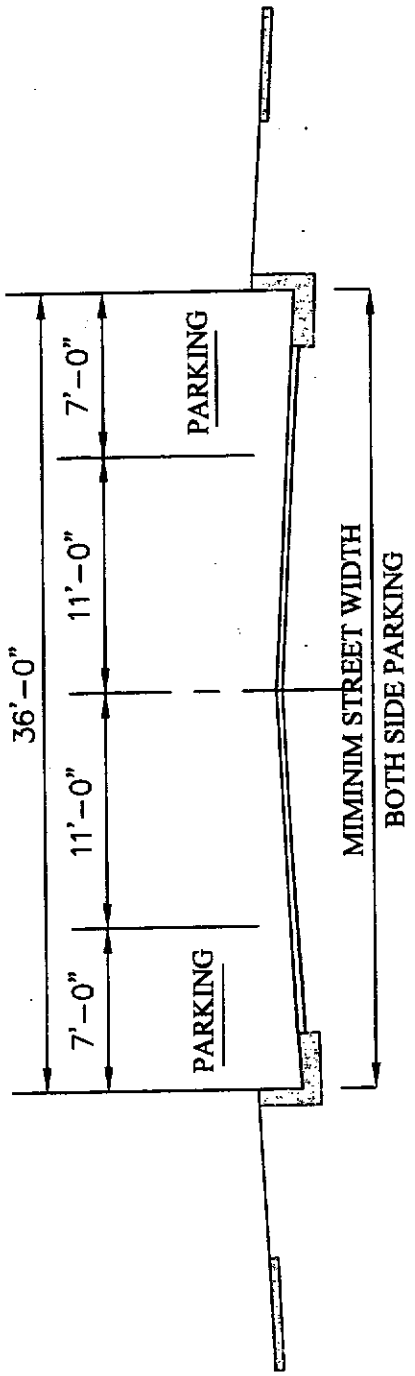

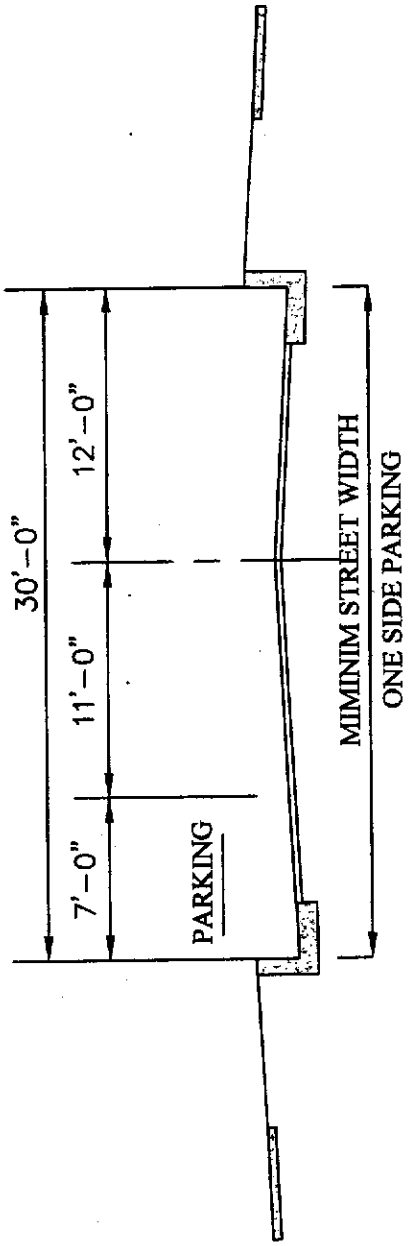

	STANDARD DETAIL	CITY OF WILMINGTON ENGINEERING OFFICE 305 CHESTNUT STREET PO. BOX 1810 WILMINGTON N.C. 28402 (910) 341-7807
DATE: 2001	MINIMUM STREET WIDTH FOR PARKING	
DRAWN BY JSR/CMR		
CHECKED BY B.P., P.E.		
SCALE NOT TO SCALE		SD 1-06

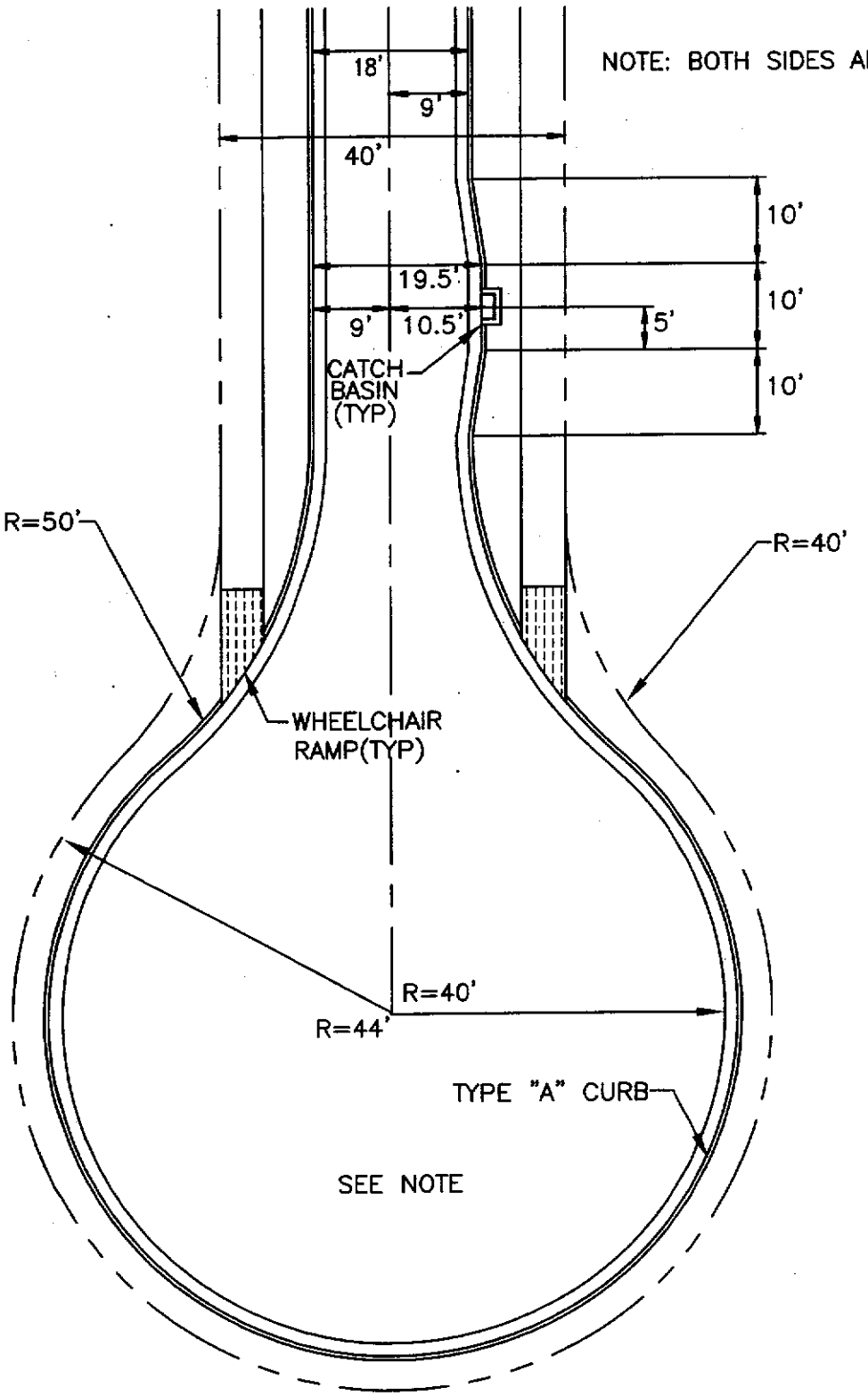

NOTE: 1. WHENEVER CATCH BASINS ARE TO BE INSTALLED WITHIN CUL-DE-SAC BULB THE RADIUS FROM THE CENTER POINT TO THE FACE OF CURB IS 41.6', AND THE RIGHT OF WAY RADIUS IS 46'.

	STANDARD DETAIL	CITY OF WILMINGTON ENGINEERING OFFICE 305 CHESTNUT STREET PO. BOX 1810 WILMINGTON N.C. 28402 (910) 341-7807
DATE: 2001	LOCAL "A" & "B" CUL-DE-SAC OPTION "1" RESIDENTIAL	
DRAWN BY JSR/CMR		
CHECKED BY B.P., P.E.		
SCALE NOT TO SCALE		SD 1-10

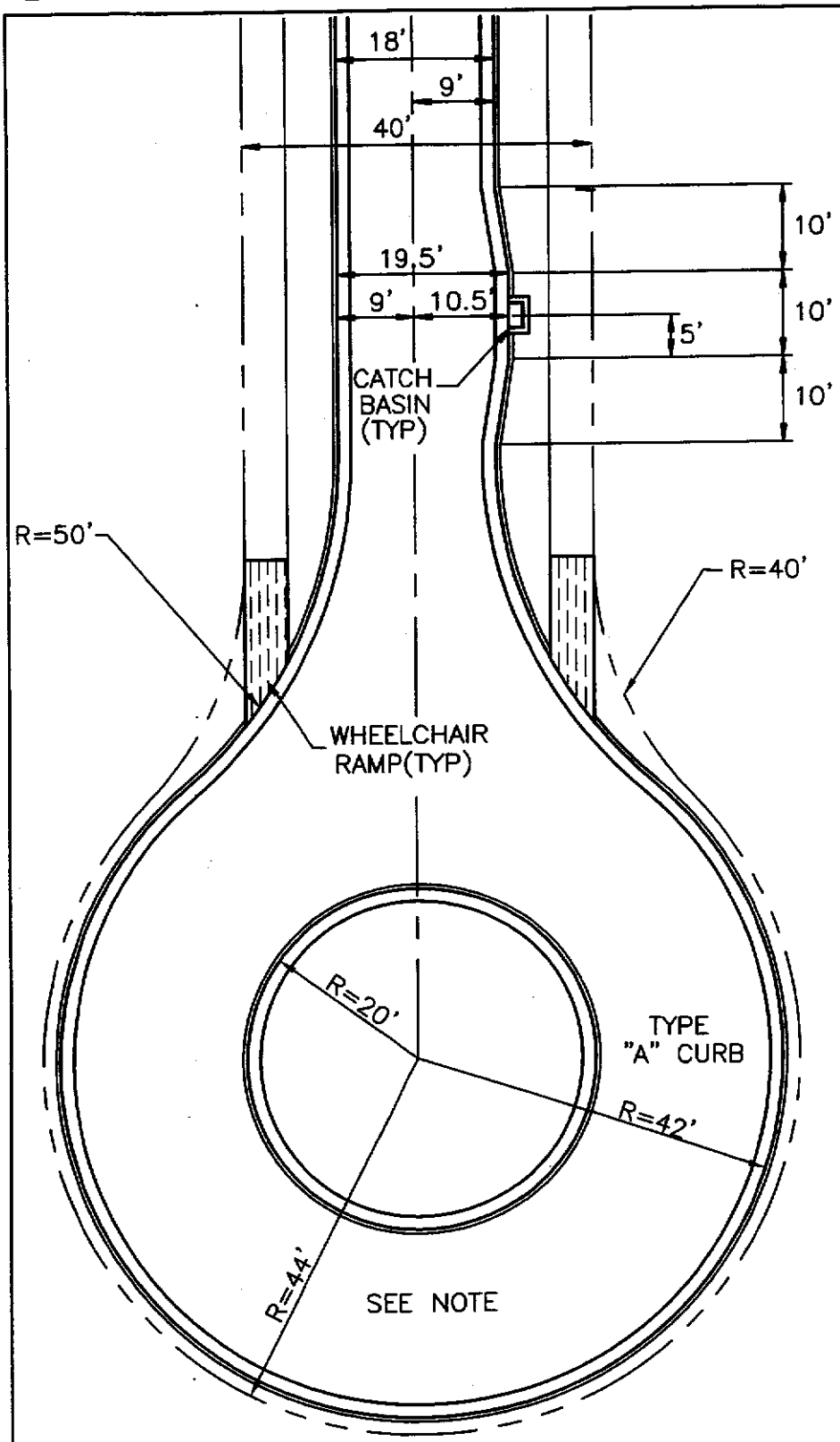

NOTE: 1. WHENEVER CATCH BASINS ARE TO BE INSTALLED WITHIN CUL-DE-SAC USING TYPE "A" CURB THE RADIUS FROM THE CENTER POINT TO THE FACE OF CURB IS 43.6', AND THE RIGHT OF WAY RADIUS IS 50'.

2. BOTH SIDES ARE SYMMETRICAL

	STANDARD DETAIL	CITY OF WILMINGTON ENGINEERING OFFICE 305 CHESTNUT STREET PO. BOX 1810 WILMINGTON N.C. 28402 (910) 341-7807
DATE: 2001	LOCAL "A" & "B" CUL-DE-SAC OPTION "1" ISLAND, RESIDENTIAL	
DRAWN BY JSR/CMR		
CHECKED BY B.P., P.E.		
SCALE NOT TO SCALE		SD 1-11

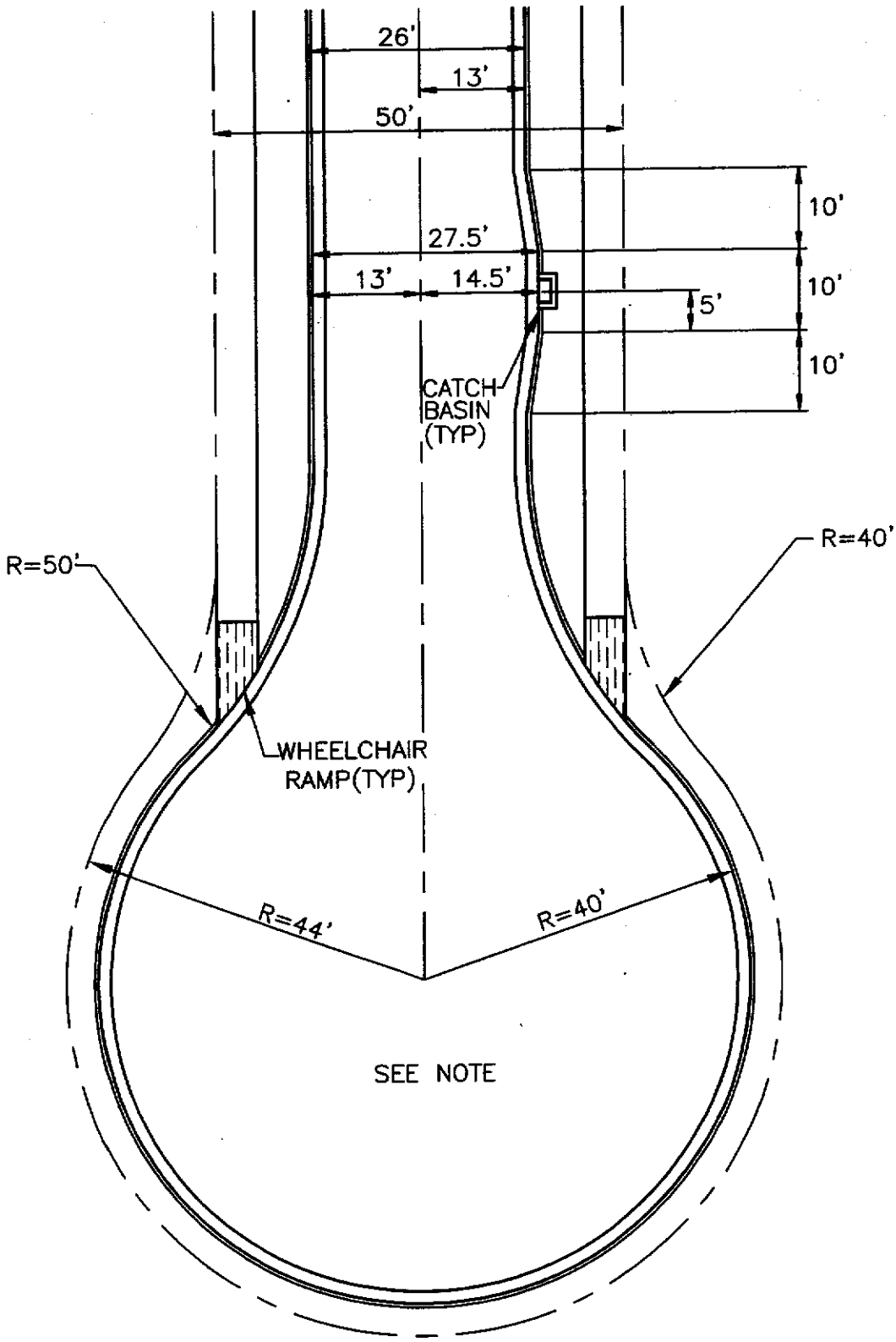

NOTE: 1. WHENEVER CATCH BASINS ARE TO BE INSTALLED WITHIN CUL-DE-SAC BULB USING TYPE "A" CURB THE RADIUS FROM THE CENTER POINT TO THE FACE OF CURB IS 41.6'. WHEN USING TYPE "D" CURB WITH CATCH BASINS THE RIGHT OF WAY RADIUS IS 46'.

2. BOTH SIDES ARE SYMMETRICAL

	STANDARD DETAIL	CITY OF WILMINGTON ENGINEERING OFFICE 305 CHESTNUT STREET PO. BOX 1810 WILMINGTON N.C. 28402 (910) 341-7807
DATE: 2001	LOCAL "A" & "B" CUL-DE-SAC OPTION "2" RESIDENTIAL	
DRAWN BY JSR/CMR		
CHECKED BY B.P., P.E.		
SCALE NOT TO SCALE		SD 1-12

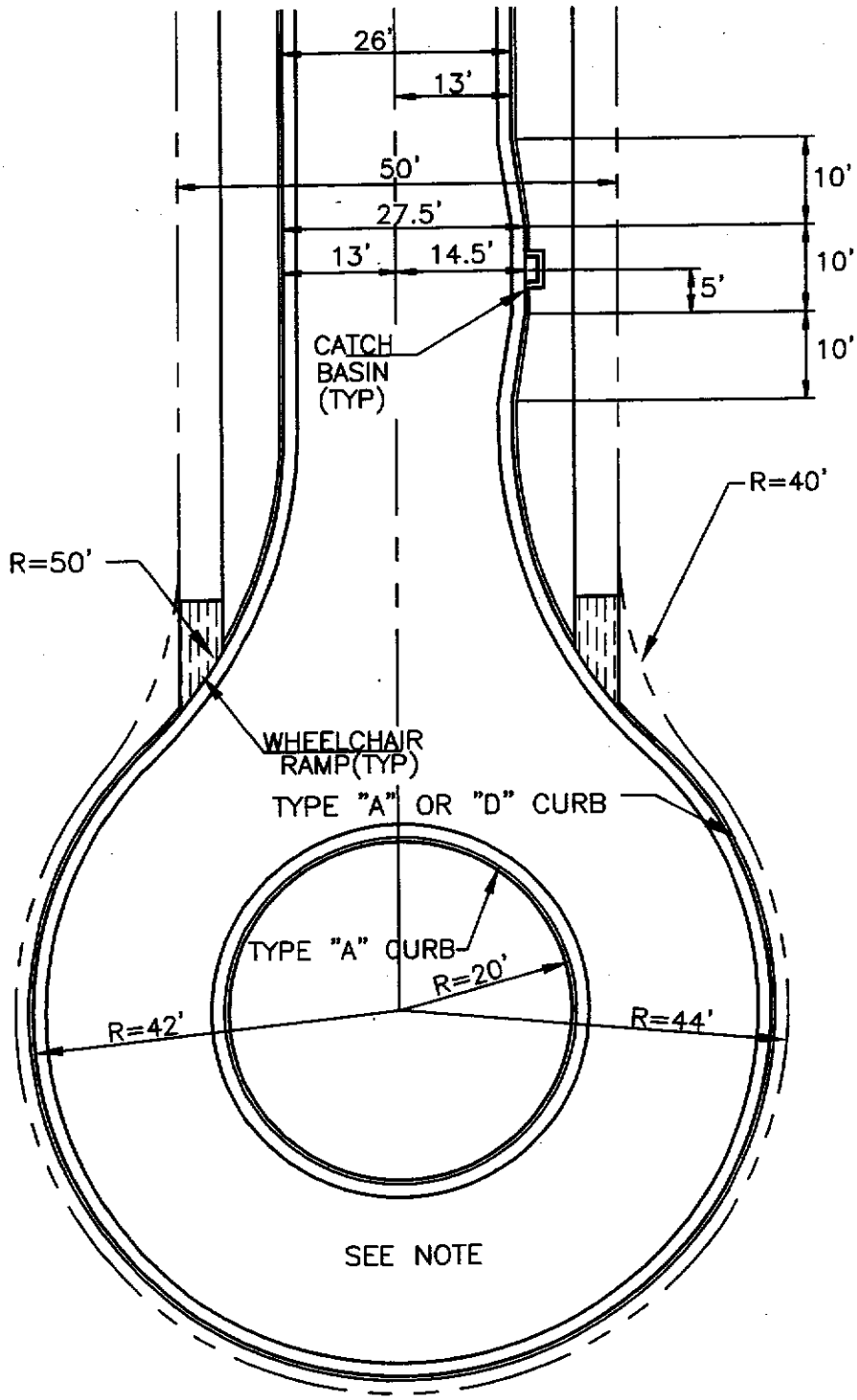

NOTE:

1. WHENEVER CATCH BASINS ARE TO BE INSTALLED WITHIN CUL-DE-SAC BULB USING TYPE "A" CURB THE RADIUS FROM THE CENTER POINT TO THE FACE OF CURB IS 43.6', AND THE RIGHT OF WAY IS 50'. WHEN USING TYPE "D" CURB WITH CATCH BASINS THE RIGHT OF WAY IS 50'.
2. WHEN USING TYPE "D" CURB THE RADIUS FROM THE CENTER POINT TO THE RIGHT OF WAY LINE IS 46' UNLESS NOTE (1) APPLIES.
3. BOTH SIDES ARE SYMMETRICAL

	STANDARD DETAIL	CITY OF WILMINGTON ENGINEERING OFFICE 305 CHESTNUT STREET PO. BOX 1810 WILMINGTON N.C. 28402 (910) 341-7807
DATE: 2001	LOCAL "A" & "B" CUL-DE-SAC OPTION "2" ISLAND, RESIDENTIAL	
DRAWN BY JSR/CMR		
CHECKED BY B.P., P.E.		
SCALE NOT TO SCALE		SD 1-13

RECOMMENDATION – PRINCIPLE 4

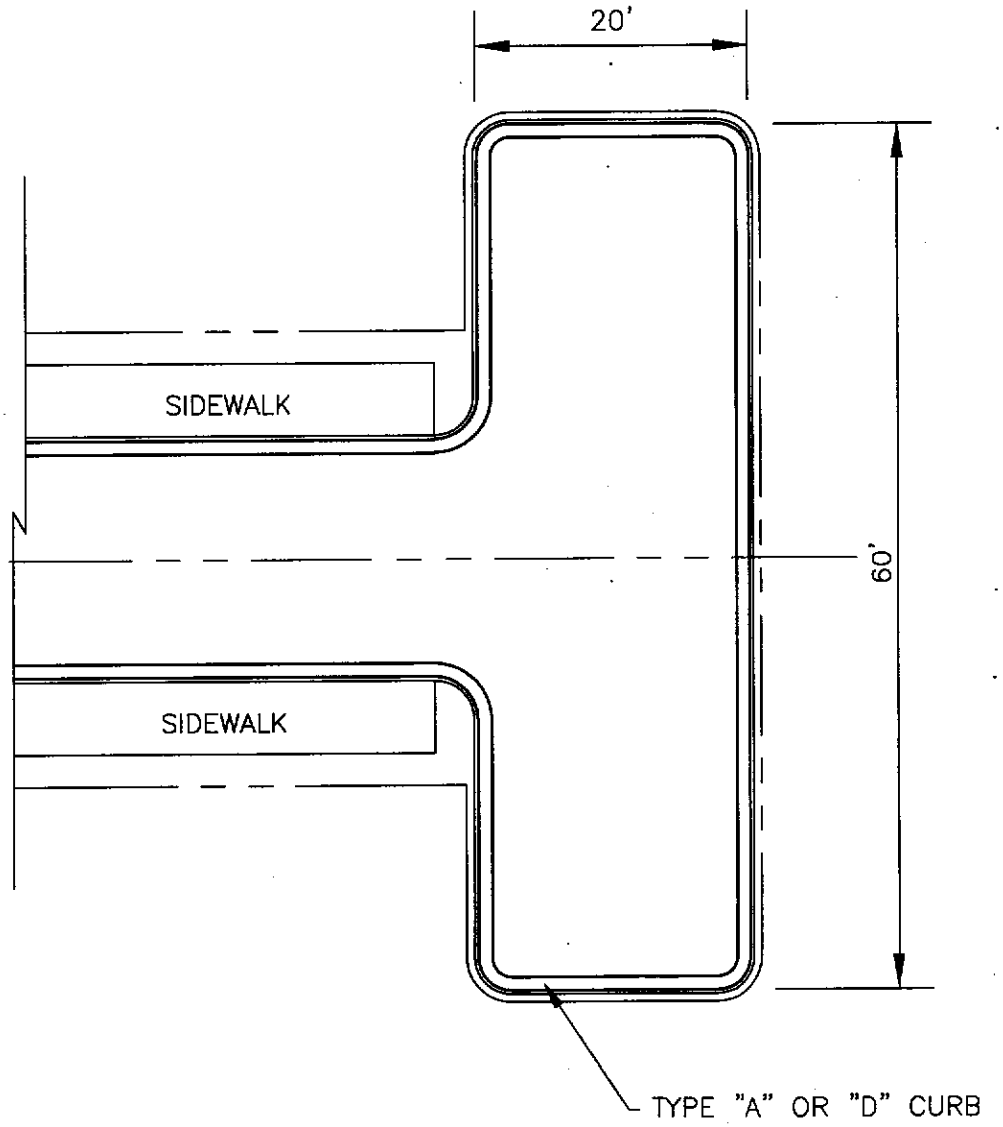

	STANDARD DETAIL	CITY OF WILMINGTON ENGINEERING OFFICE 305 CHESTNUT STREET PO. BOX 1810 WILMINGTON N.C. 28402 (910) 341-7807
DATE: 2001	RESIDENTIAL 60' by 20' T-SHAPED TURNAROUND	
DRAWN BY JSR/CMR		
CHECKED BY D.B.M., P.E.		
SCALE NOT TO SCALE		SD 1-13a

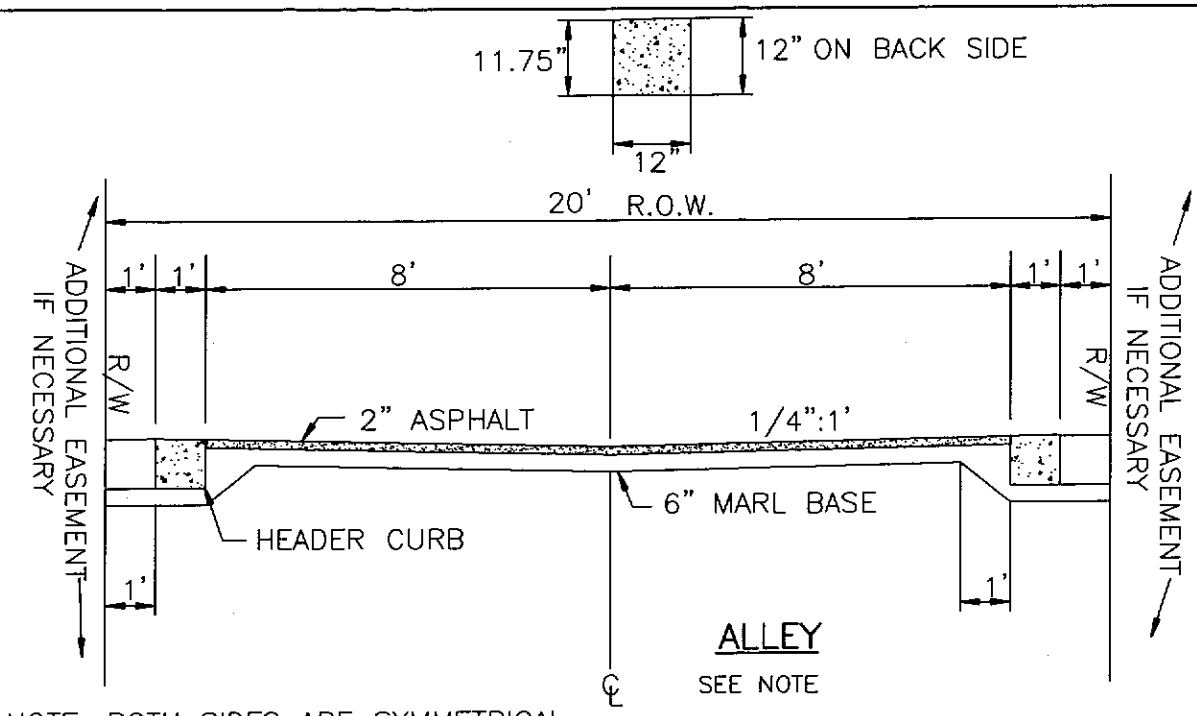

NOTE: BOTH SIDES ARE SYMMETRICAL

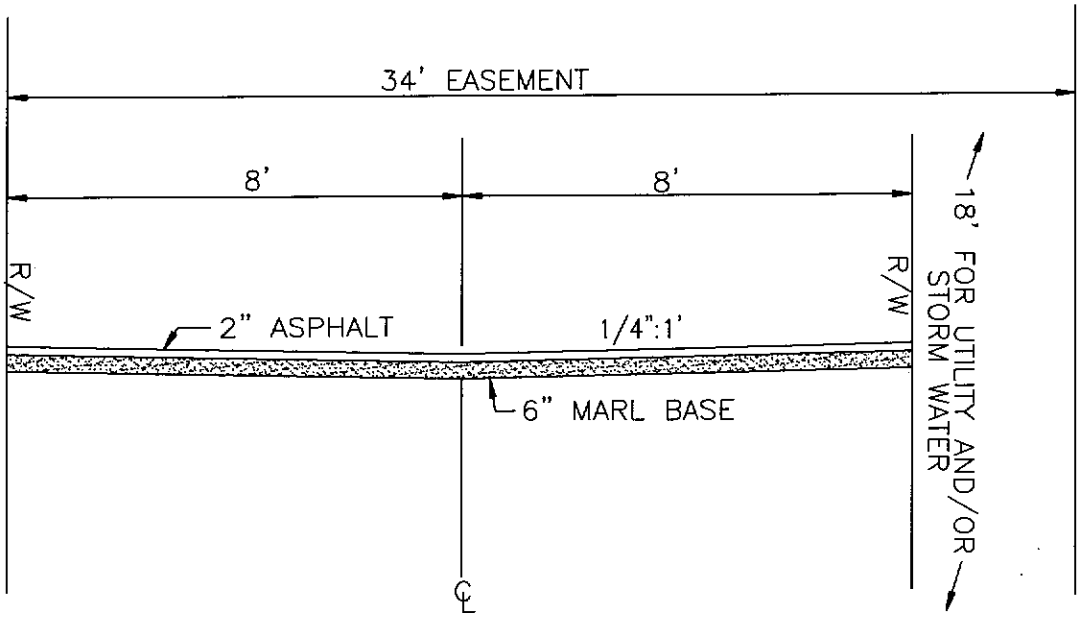

PRIVATE ACCESS EASEMENT

SEE NOTES

ALLEY NOTES:

1. NOT TO CONTAIN WATER AND SEWER UTILITY LINES

PRIVATE ACCESS EASEMENT NOTES:

1. 400' MAXIMUM LENGTH TO FURTHEST UNIT FROM PUBLIC STREET.
2. SERVES A MAXIMUM OF 4 SINGLE FAMILY OR DUPLEX UNITS.
3. 23' WIDTH REQUIRED AT STREET INTERSECTION.

ALLEY & PRIVATE ACCESS EASEMENT SECTIONS W/HEADER CURB, RESIDENTIAL
SD 1-14

	STANDARD DETAIL	CITY OF WILMINGTON ENGINEERING OFFICE 305 CHESTNUT STREET PO. BOX 1810 WILMINGTON N.C. 28402 (910) 341-7807
DATE: 2001	ALLEY & PRIVATE ACCESS EASEMENT SECTIONS W/HEADER CURB, RESIDENTIAL	
DRAWN BY JSR/CMR		
CHECKED BY B.P., P.E.		
SCALE NOT TO SCALE		SD 1-14

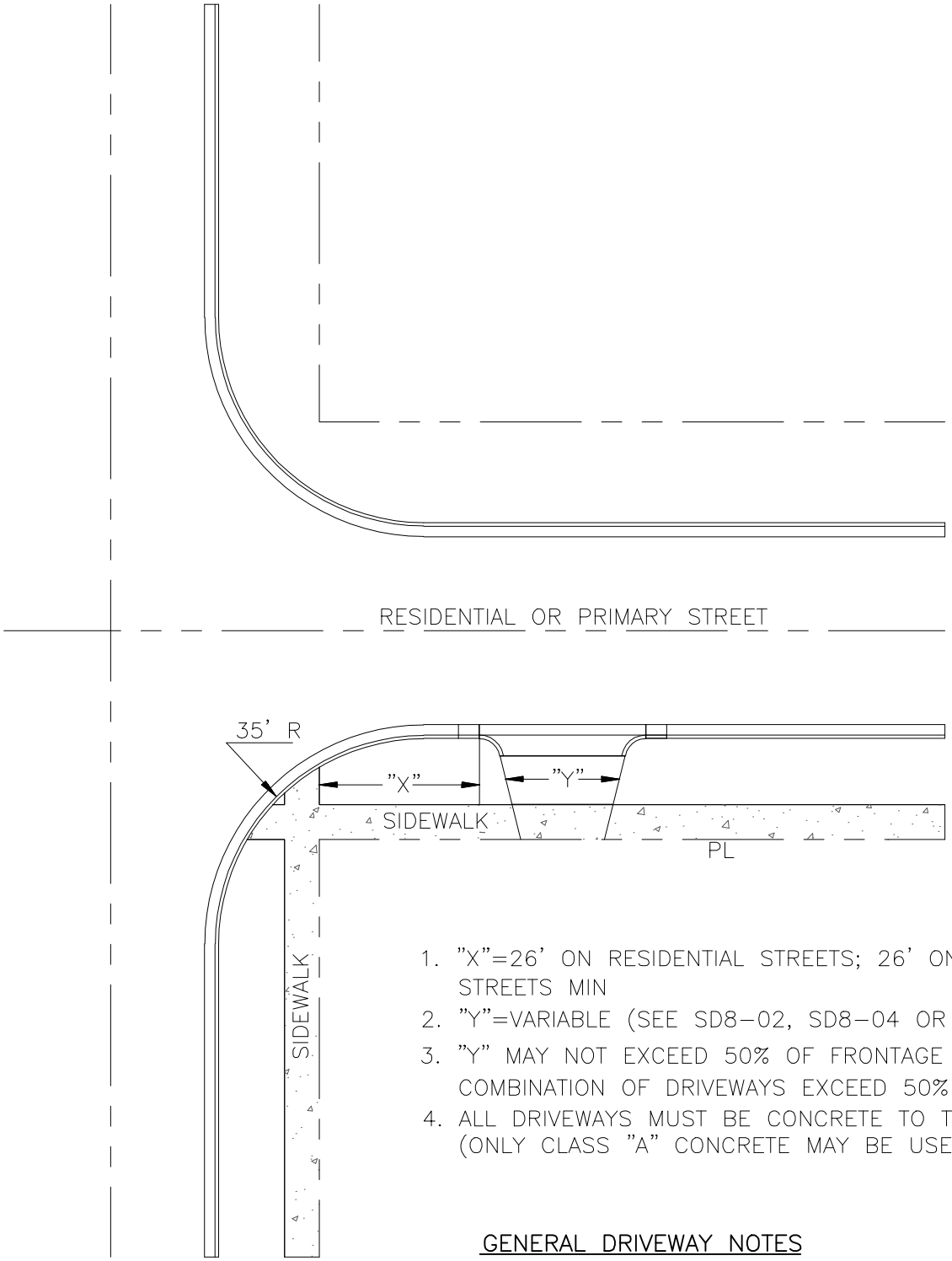

1. "X"=26' ON RESIDENTIAL STREETS; 26' ON PRIMARY STREETS MIN
2. "Y"=VARIABLE (SEE SD8-02, SD8-04 OR SD8-05)
3. "Y" MAY NOT EXCEED 50% OF FRONTAGE NOR MAY ANY COMBINATION OF DRIVEWAYS EXCEED 50% OF FRONTAGE
4. ALL DRIVEWAYS MUST BE CONCRETE TO THE PL (ONLY CLASS "A" CONCRETE MAY BE USED)

GENERAL DRIVEWAY NOTES
SD 8-07

	STANDARD DETAIL	CITY OF WILMINGTON ENGINEERING OFFICE 305 CHESTNUT STREET PO. BOX 1810 WILMINGTON N.C. 28402 (910) 341-7807
DATE: 6/01/2007	**GENERAL DRIVEWAY NOTES**	
DRAWN BY JSR/CMR		
CHECKED BY B.P., P.E.		
SCALE NOT TO SCALE		**SD 8-07**

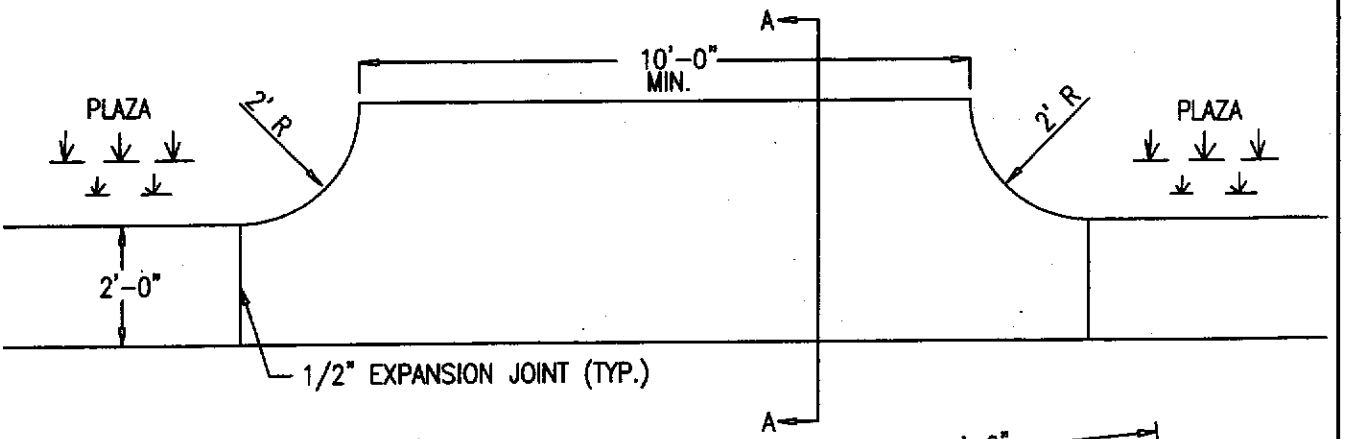

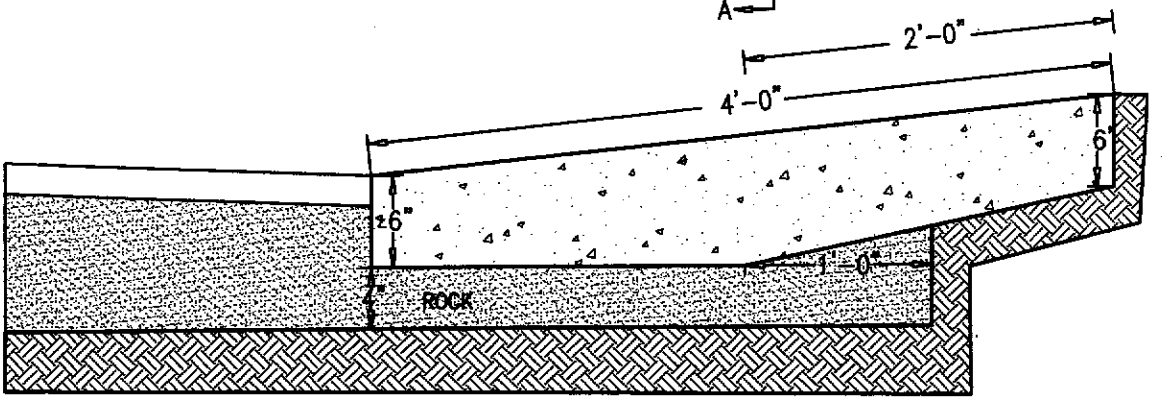

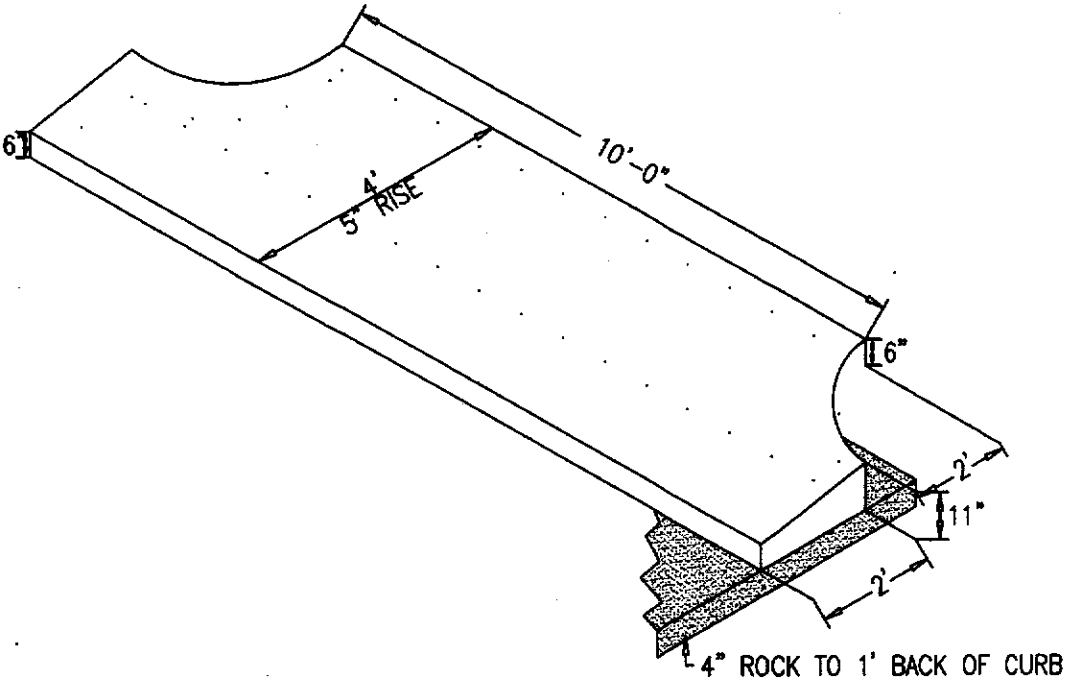

	STANDARD DETAIL	CITY OF WILMINGTON ENGINEERING OFFICE 305 CHESTNUT STREET PO. BOX 1810 WILMINGTON N.C. 28402 (910) 341-7807
DATE: 2001	TYPE "D" CURB DRIVEWAY ENTRANCE WITH 2' RADIUS	
DRAWN BY JSR/CMR		
CHECKED BY B.P., P.E.		
SCALE NOT TO SCALE		SD 8-01

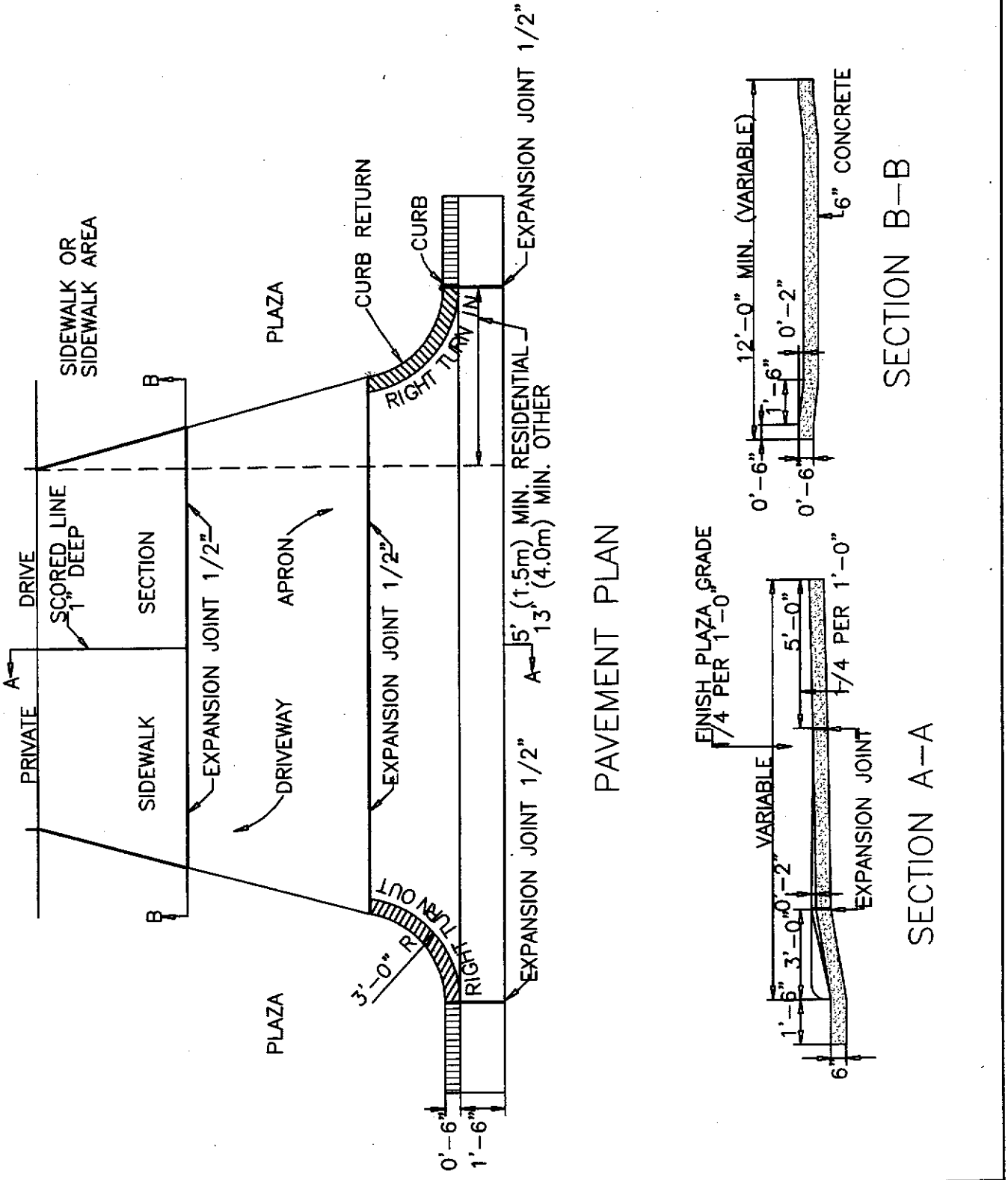

	STANDARD DETAIL	CITY OF WILMINGTON ENGINEERING OFFICE 305 CHESTNUT STREET PO. BOX 1810 WILMINGTON N.C. 28402 (910) 341-7807
DATE: 2001	STANDARD DRIVEWAY DETAIL	SD 8-02
DRAWN BY JSR/CMR		
CHECKED BY B.P., P.E.		
SCALE NOT TO SCALE		

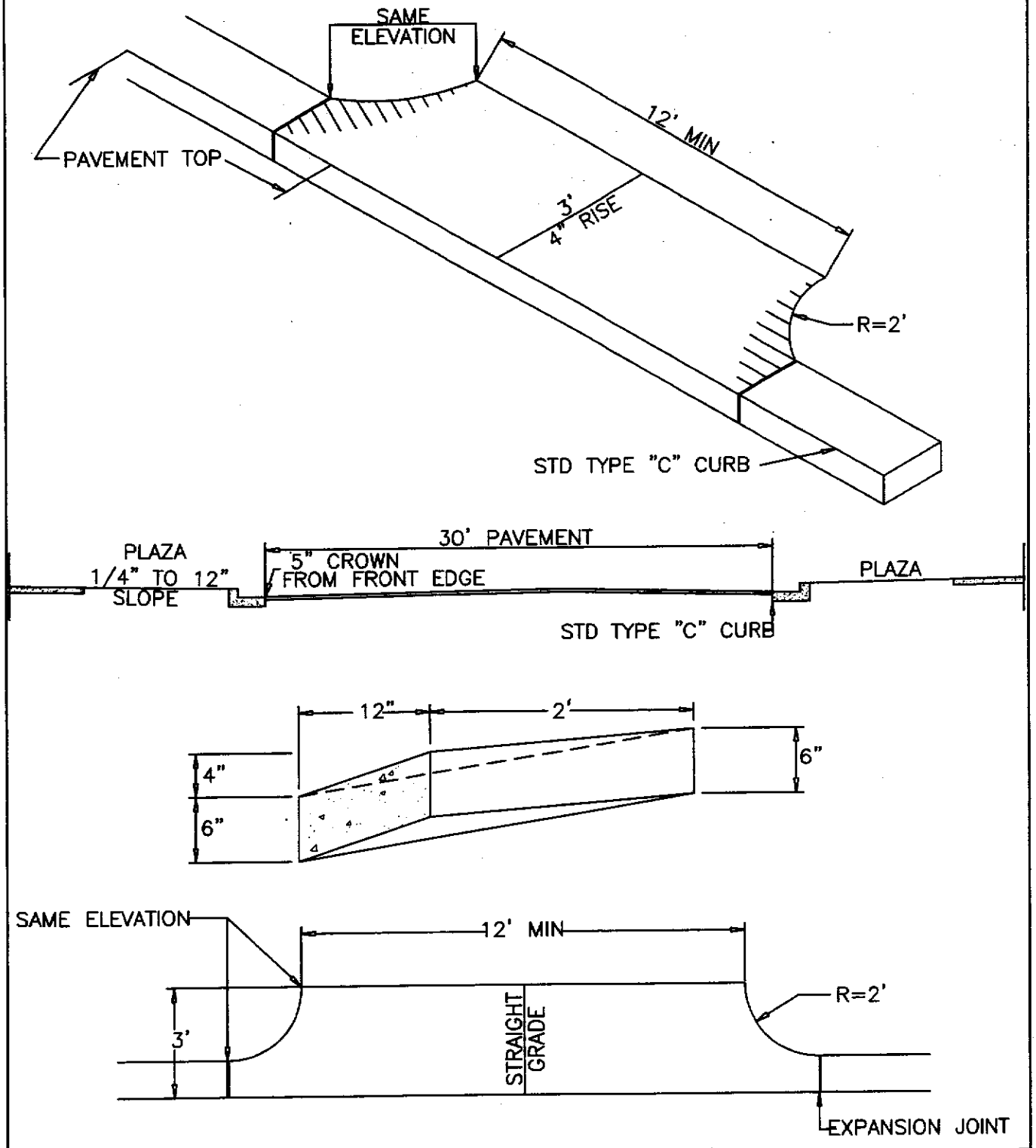

	STANDARD DETAIL	CITY OF WILMINGTON ENGINEERING OFFICE 305 CHESTNUT STREET PO. BOX 1810 WILMINGTON N.C. 28402 (910) 341-7807
DATE: 2001	TYPICAL SLOPE FACE CURB DRIVE ENTRANCE	
DRAWN BY JSR/CMR		
CHECKED BY B.P., P.E.		
SCALE NOT TO SCALE		SD 8-03

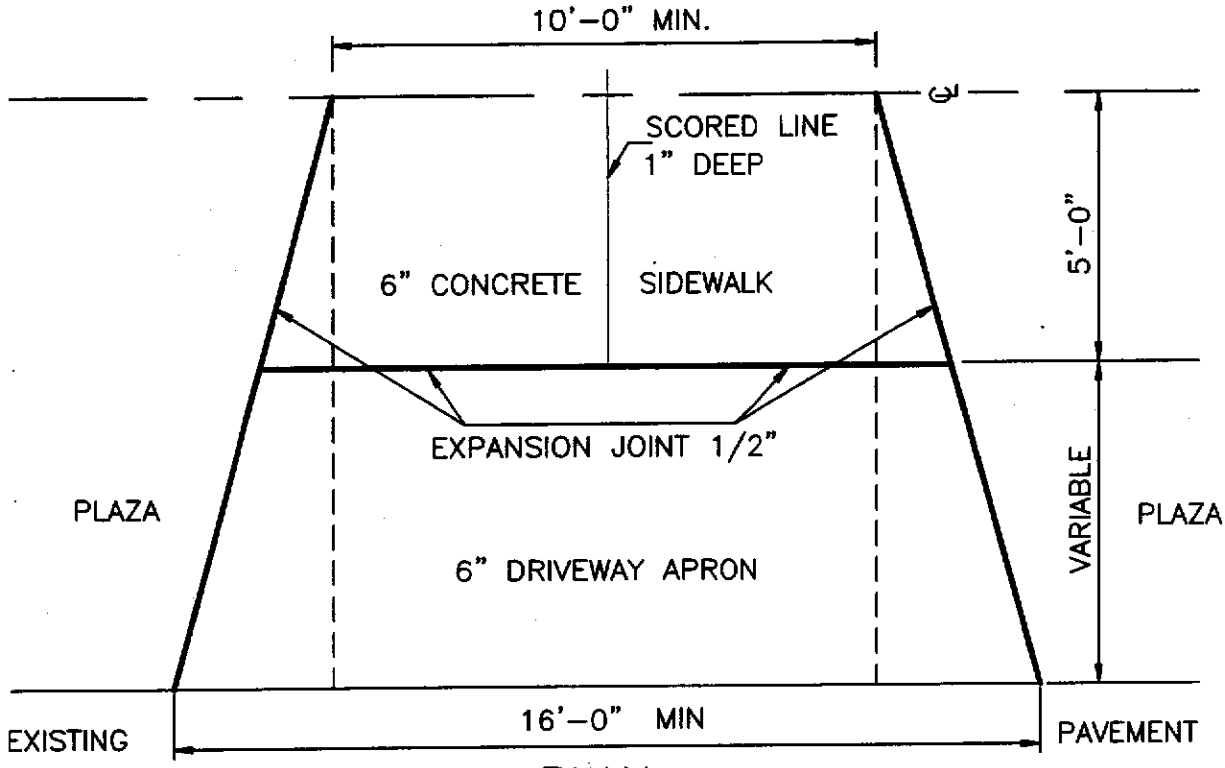

PLAN

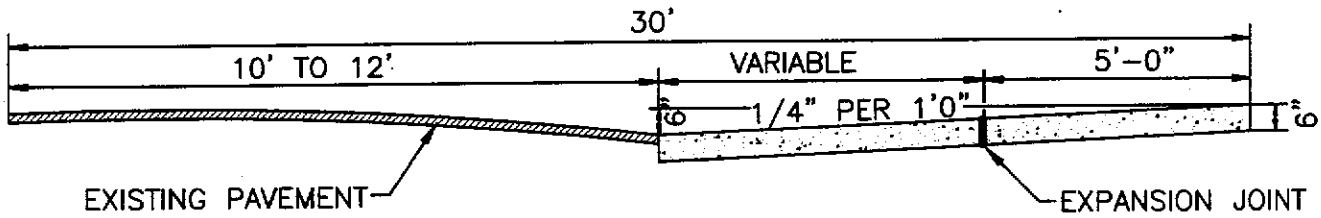

SECTION A-A

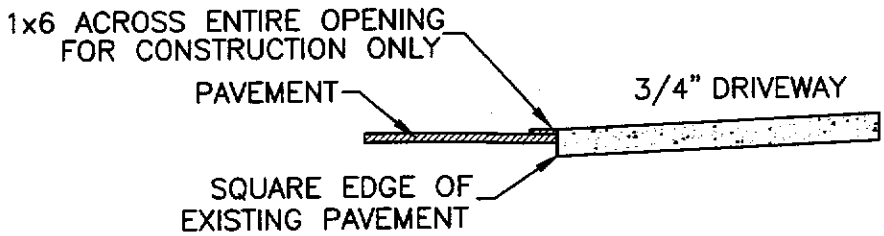

FORMING DETAIL

	STANDARD DETAIL	CITY OF WILMINGTON ENGINEERING OFFICE 305 CHESTNUT STREET PO. BOX 1810 WILMINGTON N.C. 28402 (910) 341-7807
DATE: 2001	RESIDENTIAL DRIVEWAY STREETS WITH NO CURB	
DRAWN BY JSR/CMR		
CHECKED BY B.P., P.E.		
SCALE NOT TO SCALE		SD 8-05

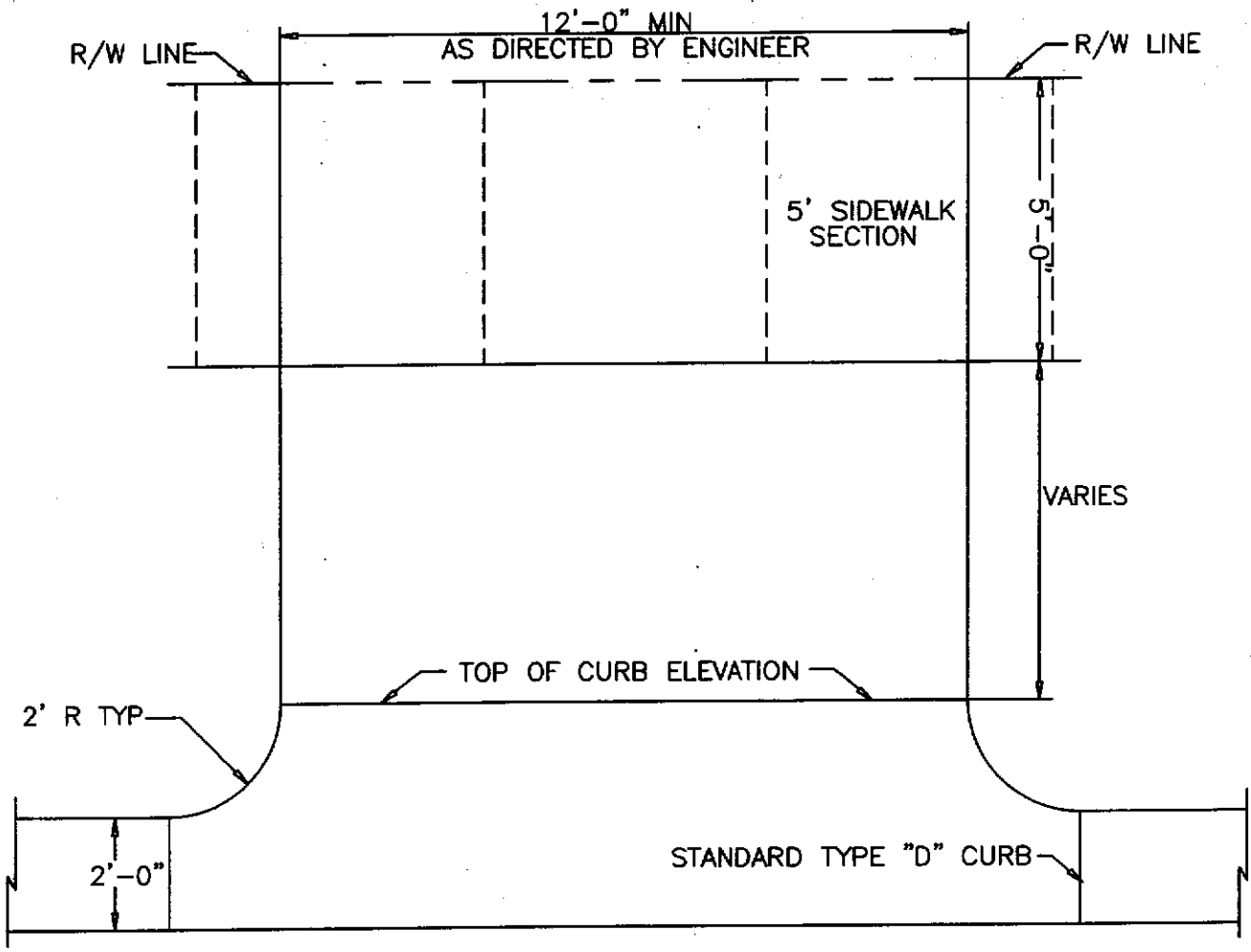

	STANDARD DETAIL	
DATE: 2001	TYPICAL DRIVEWAY WITH TYPE "D" CURB	CITY OF WILMINGTON ENGINEERING OFFICE 305 CHESTNUT STREET PO. BOX 1810 WILMINGTON N.C. 28402 (910) 341-7807
DRAWN BY JSR/CMR		
CHECKED BY B.P., P.E.		
SCALE NOT TO SCALE		SD 8-06

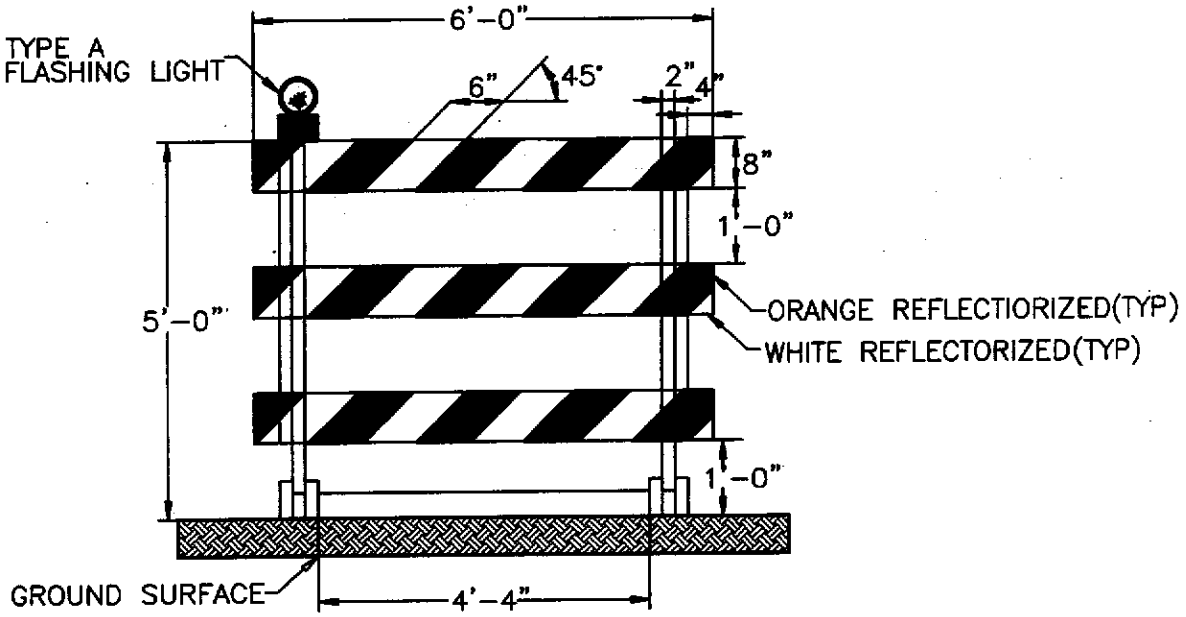

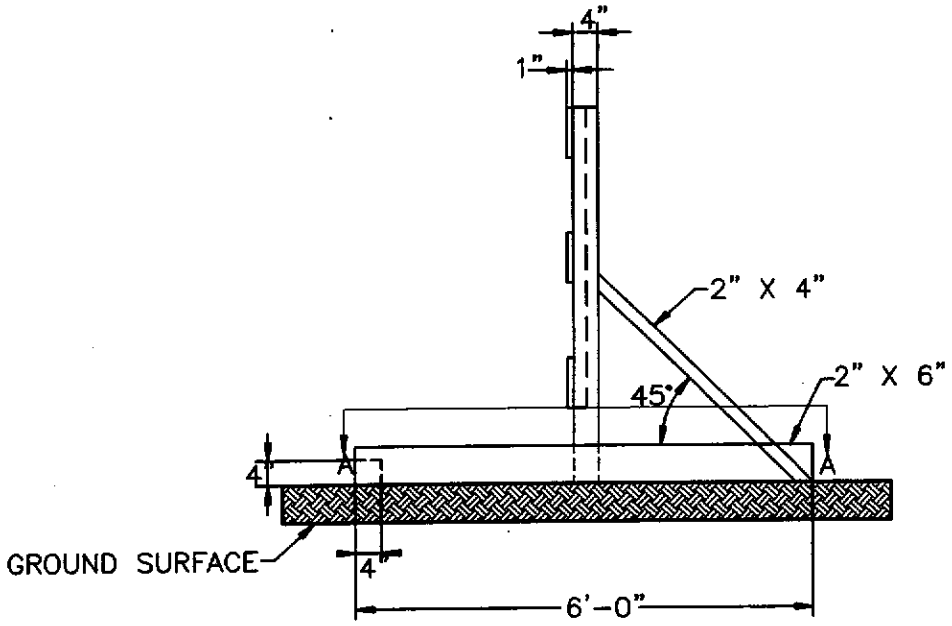

A–A

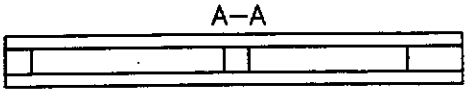

	STANDARD DETAIL	CITY OF WILMINGTON ENGINEERING OFFICE 305 CHESTNUT STREET PO. BOX 1810 WILMINGTON N.C. 28402 (910) 341-7807
DATE: 2001	TYPE III BARRICADE	
DRAWN BY JSR/CMR		
CHECKED BY B.P., P.E.		
SCALE NOT TO SCALE		SD 15-07

STANDARD N.C. "STOP" SIGN

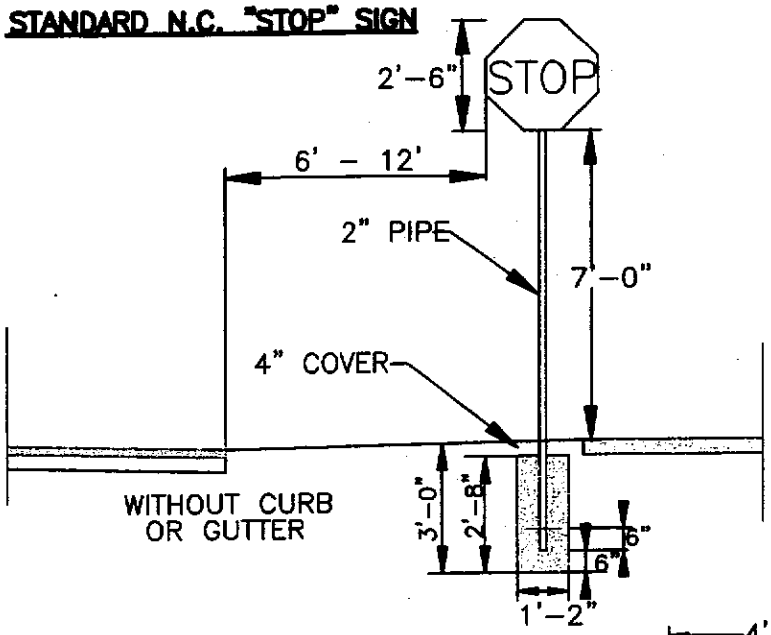

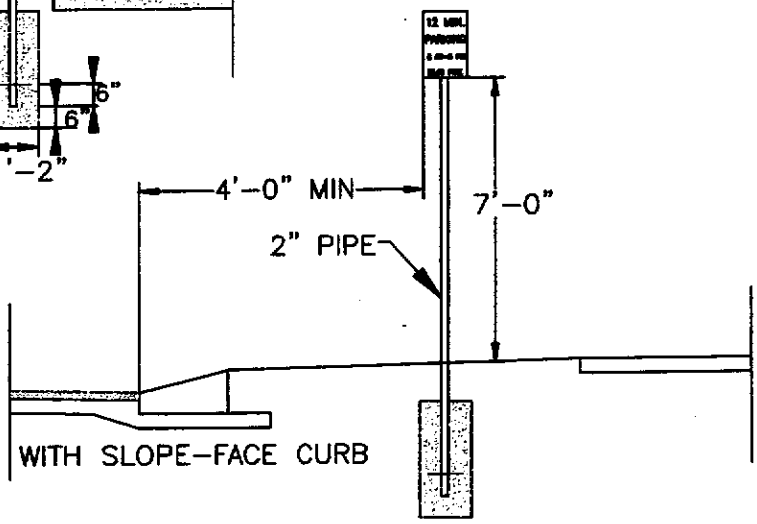

STANDARD INFORMATION SIGN

STREET NAME SIGN
(SEE NOTE)

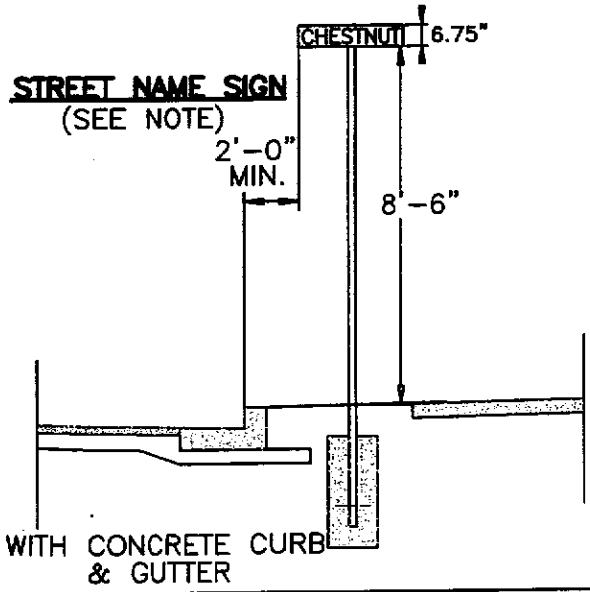

NOTES:

1. STREET NAME SIGNS SHALL BE A MINIMUM OF 6" EXTRUDED ALUMINUM BLADES USING A MINUMUM OF 4" C SERIES LETTERING IN REFLECTIVE SILVER & REFLECTIVE GREEN BACKGROUND.
2. ALL REFLECTIVE SIGNS SHALL BE MADE OF ENGINEERING GRADE OR HIGH INTENSITY GRADE REFLECTIVE SHEETING OR APPROVED EQUIVALENT.
3. ALL SIGNS PLACED IN RIGHT-OF-WAY WILL BE APPROVED BY TRAFFIC ENGINEERING DIVISION.
4. ALL FOOTINGS TYPICAL FOR ALL SIGNS, WHICH NEED TO BE ANCHORED IN CONCRETE.

	STANDARD DETAIL	CITY OF WILMINGTON ENGINEERING OFFICE 305 CHESTNUT STREET PO. BOX 1810 WILMINGTON N.C. 28402 (910) 341-7807
DATE: 2001	SIGN INSTALLATION LOCATION	
DRAWN BY JSR/CMR		
CHECKED BY B.P., P.E.		
SCALE NOT TO SCALE		SD 15-03

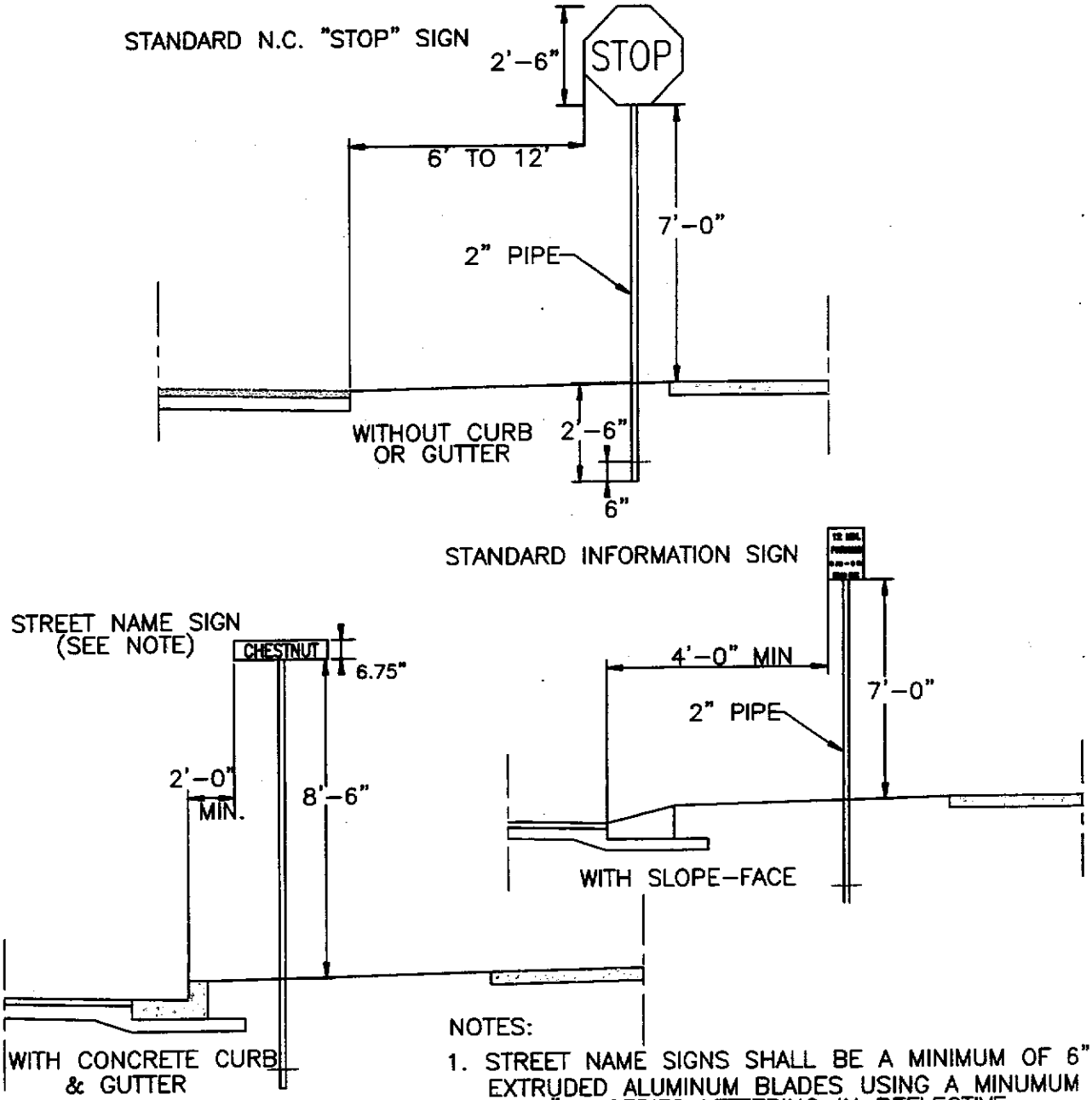

NOTES:

1. STREET NAME SIGNS SHALL BE A MINIMUM OF 6" EXTRUDED ALUMINUM BLADES USING A MINUMUM OF 4" C SERIES LETTERING IN REFLECTIVE SILVER & REFLECTIVE GREEN BACKGROUND.
2. ALL REFLECTIVE SIGNS SHALL BE MADE OF ENGINEERING GRADE OR HIGH INTENSITY GRADE REFLECTIVE SHEETING OR APPROVED EQUIVALENT.
3. ALL SIGNS PLACED IN RIGHT-OF-WAY WILL BE APPROVED BY TRAFFIC ENGINEERING DIVISION.
4. ALL FOOTINGS TYPICAL FOR ALL SIGNS, WHICH NEED TO BE ANCHORED IN CONCRETE.

	STANDARD DETAIL	CITY OF WILMINGTON ENGINEERING OFFICE 305 CHESTNUT STREET PO. BOX 1810 WILMINGTON N.C. 28402 (910) 341-7807
DATE: 2001	STANDARD SIGN INSTALLATION AND LOCATION	
DRAWN BY JSR/CMR		
CHECKED BY B.P., P.E.		
SCALE NOT TO SCALE		SD 15-04

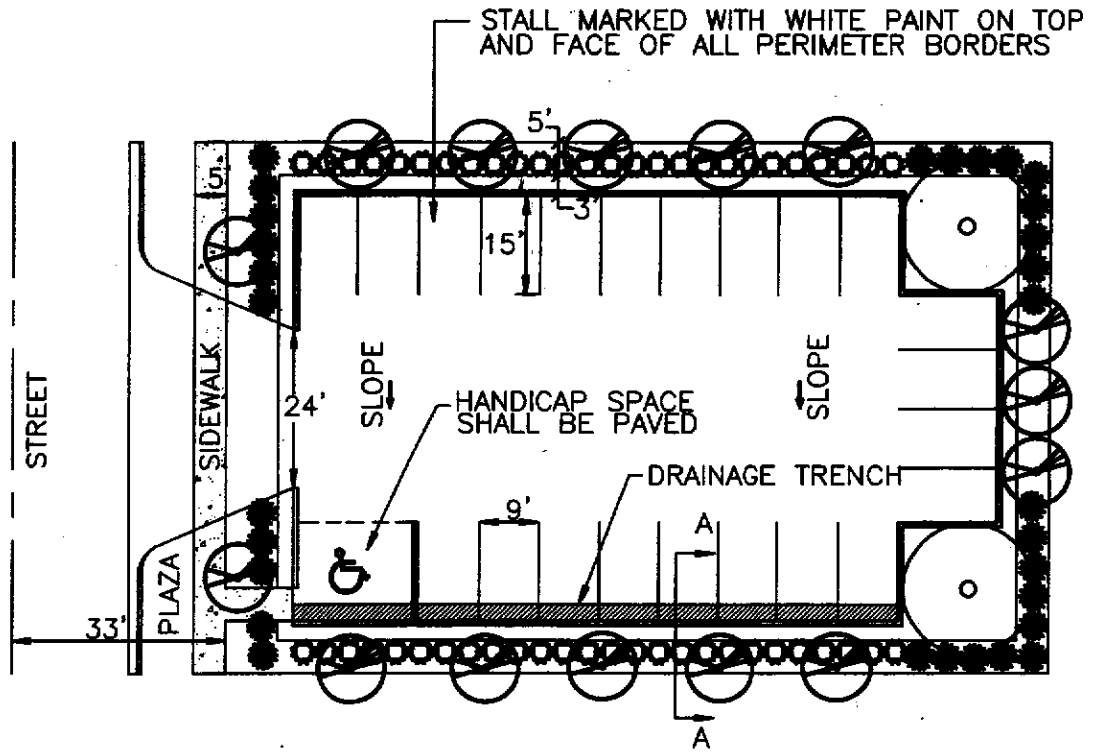

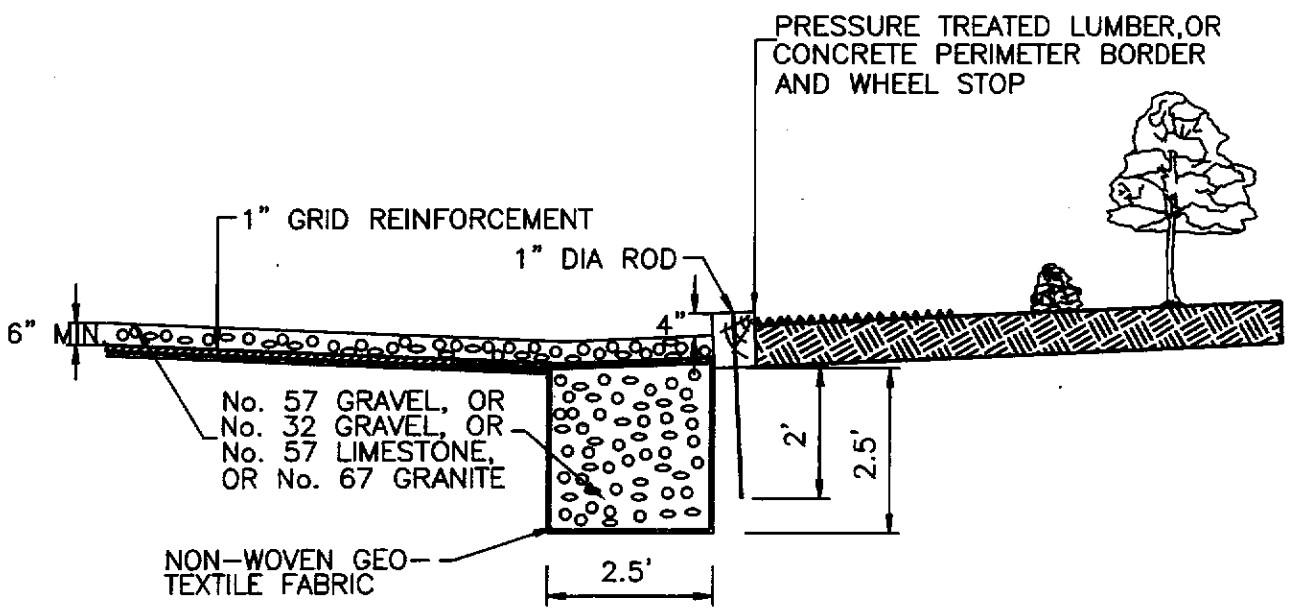

SECTION A–A

	STANDARD DETAIL	CITY OF WILMINGTON ENGINEERING OFFICE 305 CHESTNUT STREET PO. BOX 1810 WILMINGTON N.C. 28402 (910) 341-7807
DATE: 2001	TYPICAL UNPAVED PARKING FACILITY UNDER 25 STALLS	
DRAWN BY JSR/CMR		
CHECKED BY B.P., P.E.		
SCALE NOT TO SCALE		SD 15-10

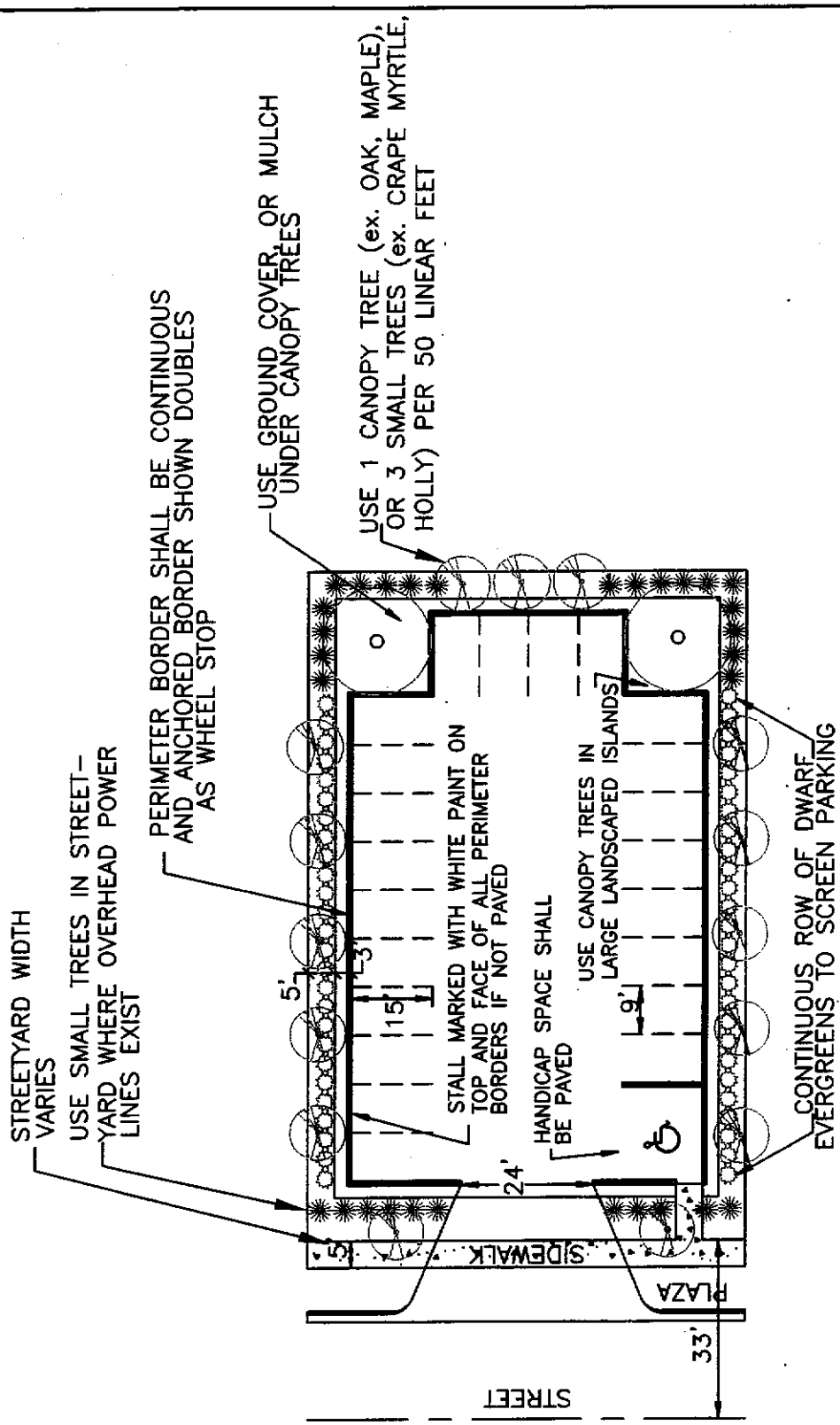

EXAMPLES OF PERIMETER LANDSCAPING

	STANDARD DETAIL	CITY OF WILMINGTON ENGINEERING OFFICE 305 CHESTNUT STREET PO. BOX 1810 WILMINGTON N.C. 28402 (910) 341-7807
DATE: 2001	PARKING FACILITY UNDER 25 STALLS PAVED OR UNPAVED	
DRAWN BY JSR/CMR		
CHECKED BY B.P., P.E.		
SCALE NOT TO SCALE	SHEET 1 OF 2	SD 15-11

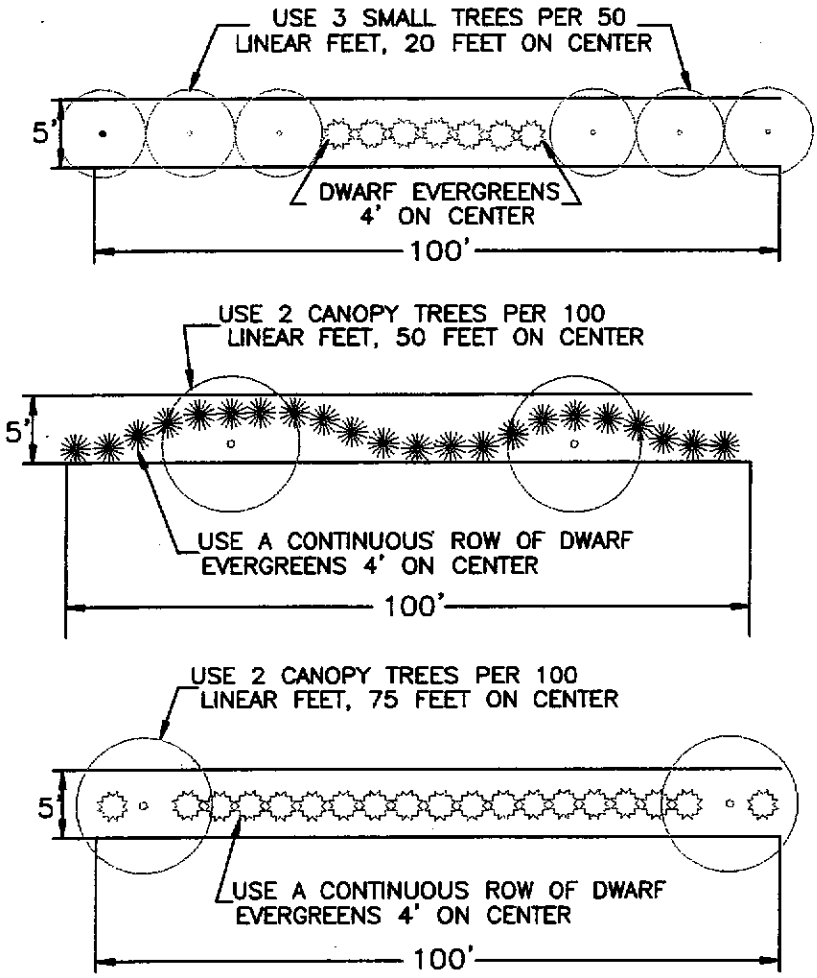

EXAMPLES OF PERIMETER LANDSCAPING

	STANDARD DETAIL	CITY OF WILMINGTON ENGINEERING OFFICE 305 CHESTNUT STREET PO. BOX 1810 WILMINGTON N.C. 28402 (910) 341-7807
DATE: 2001	PARKING FACILITY UNDER 25 STALLS PAVED OR UNPAVED	
DRAWN BY JSR/CMR		
CHECKED BY B.P., P.E.		
SCALE NOT TO SCALE	SHEET 2 OF 2	SD 15-11

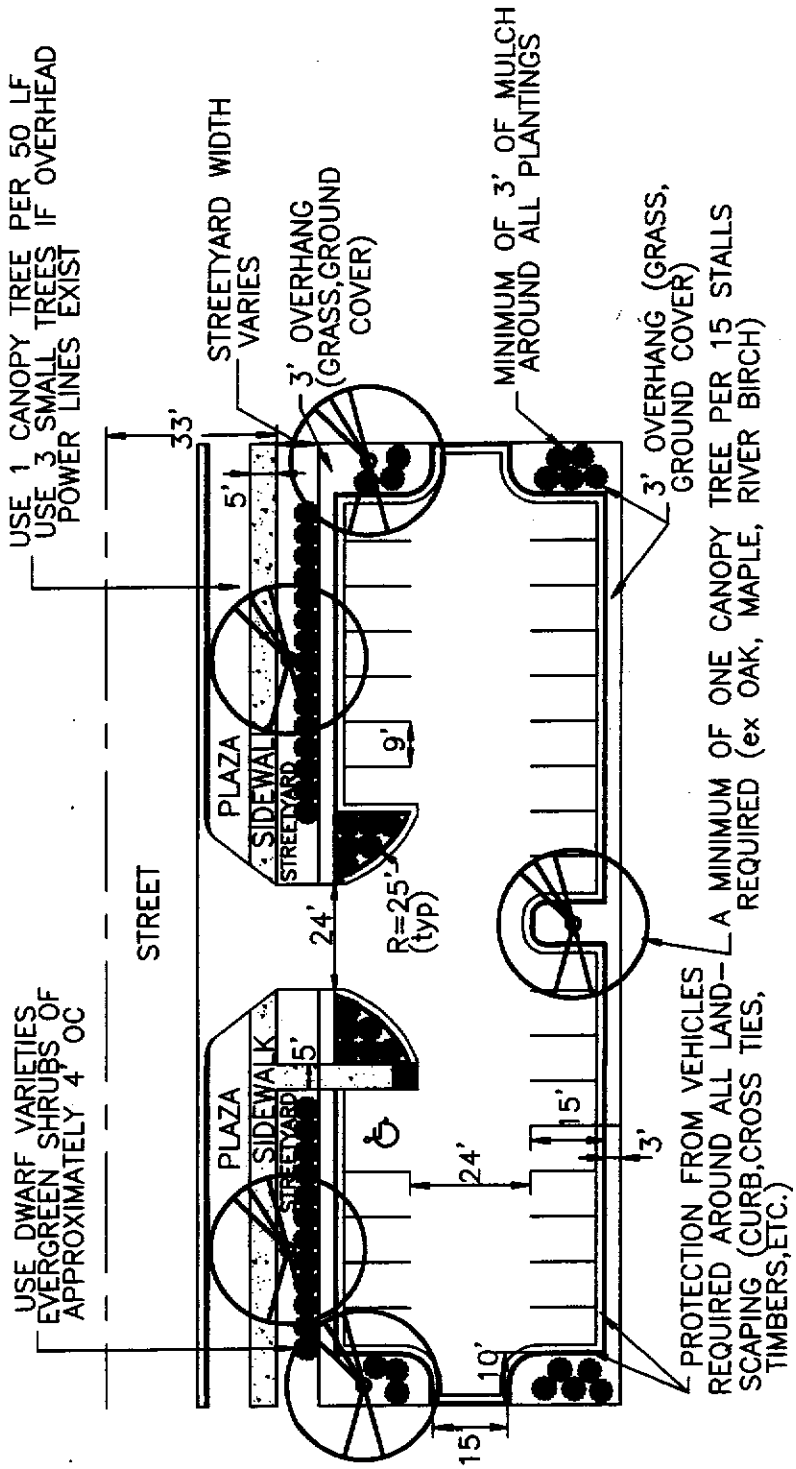

EXAMPLES OF PERIMETER LANDSCAPING

DATE: 2001	STANDARD DETAIL	CITY OF WILMINGTON ENGINEERING OFFICE 305 CHESTNUT STREET PO. BOX 1810 WILMINGTON N.C. 28402 (910) 341-7807
DRAWN BY JSR/CMR	PARKING FACILITY EQUAL TO OR GREATER THAN 25 STALLS	
CHECKED BY B.P., P.E.		
SCALE NOT TO SCALE	SHEET 1 OF 2	SD 15-12

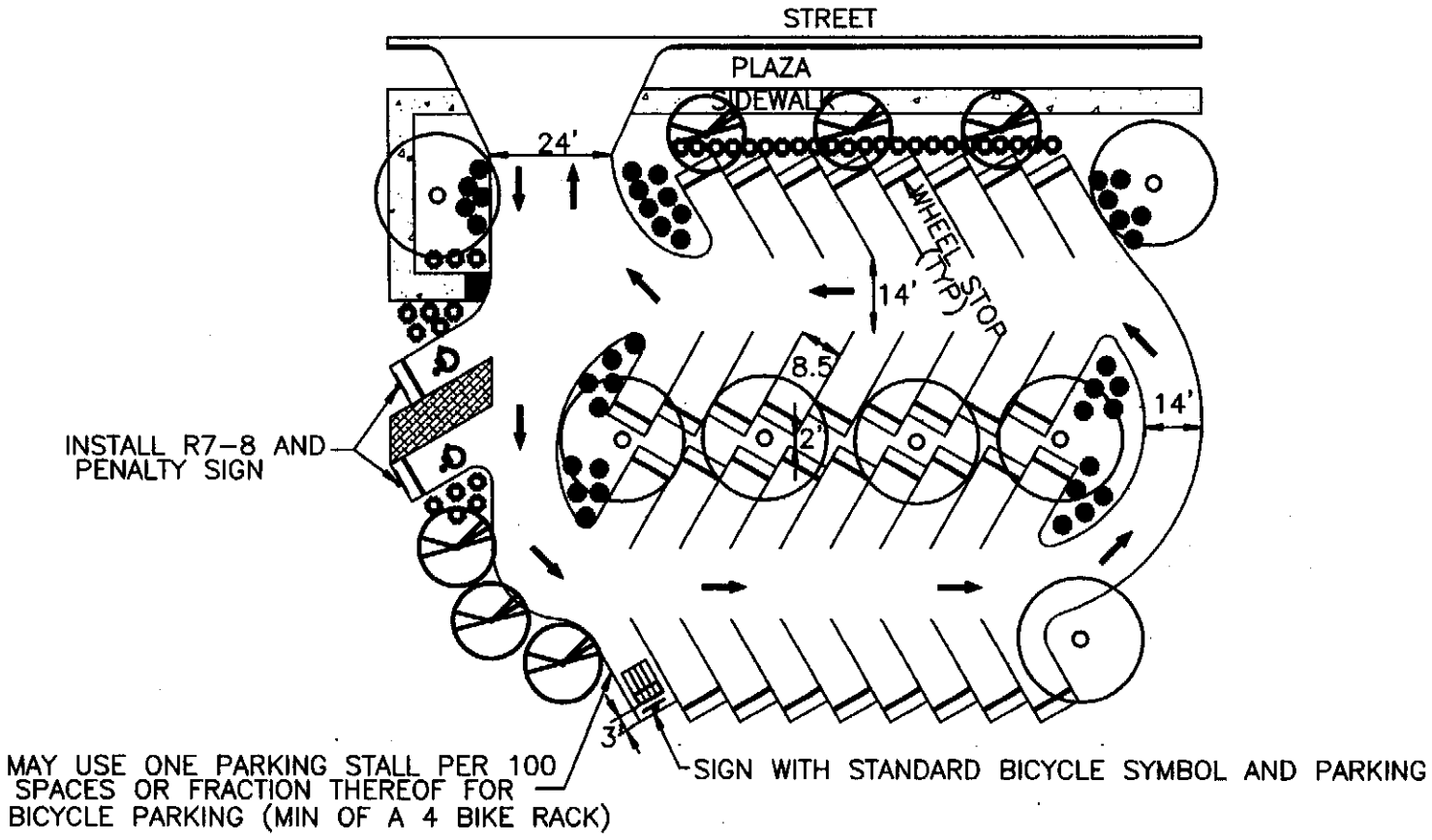

NOTES:
1 – SEE PARKING LOT DESIGN STANDARDS FOR ALTERNATIVE PARKING LOT DIMENSIONS
2 – SEE "LANDSCAPE" FOR RECOMMENDED PLANT LIST T-10.4

EXAMPLES OF PERIMETER LANDSCAPING

STANDARD DETAIL

PARKING FACILITY EQUAL TO OR GREATER THAN 25 STALLS

SHEET 2 OF 2

DATE: 2001
DRAWN BY JSR/CMR
CHECKED BY B.P., P.E.
SCALE NOT TO SCALE

CITY OF WILMINGTON
ENGINEERING OFFICE
305 CHESTNUT STREET
PO. BOX 1810
WILMINGTON N.C. 28402
(910) 341-7807

SD 15-12

1. Variances on stall widths, angle and other dimensions will be allowed only upon approval of the Traffic Engineer.
2. Wheel stops shall be required three (3) feet from the end of parking stall when using eighteen (18) feet deep stalls.
3. Curbing, crossties, utility poles, etc., can be used as wheel stops. (Must be anchored down)
4. All medians shall be a minimum of six (6) feet wide.
5. Parking bays which terminate at a circulation way shall provide for a minimum turning radius of twenty-five (25) feet, as measured from the edge of the travel portion.
6. All parking stall markings and lane arrows shall be white.
7. All other pavement markings, signs or other traffic control devices shall conform to the latest edition and/or interpretation of the Manual on Uniform Traffic Control Devices (MUTCD).
8. No obstructions will be allowed adjacent to a parking stall which would prevent safe ingress and egress from a parked vehicle.
9. Parking in fire lanes and in non-residential driveways shall be prevented by standard signs and as needed by portable barricades.

	STANDARD DETAIL	CITY OF WILMINGTON ENGINEERING OFFICE 305 CHESTNUT STREET PO. BOX 1810 WILMINGTON N.C. 28402 (910) 341-7807
DATE: 2001	PARKING FACILITY DESIGN NOTES	
DRAWN BY JSR/CMR		
CHECKED BY B.P., P.E.		
SCALE NOT TO SCALE		SD 15-13

1. No plantings over thirty (30) inches in height allowed in vision clearance.
2. Protection from vehicular traffic provided around all landscaping with a minimum height of six (6) inches.
3. Owner is responsible for maintenance to ensure plant material lives and prospers.
4. Planting plans shall be approved by Landscape Designer prior to installation.
5. Landscaping shall be required at the ends of all parking rows.
6. A low buffer shall be required where parking is within fifty (50) feet of the Right-of-Way.
7. Landscaped islands shall be a minimun width of twelve (12) feet (back of curb to back of curb) and a minimum of two hundred and sixteen (216) square feet.
8. A minimum of fifteen (15) trees 2 inches or greater in diameter as measured 6 inches above ground per disturbed acre.
9. For recommended Plant List see "Landscape" T-10.4.

LANDSCAPE NOTES
SD 15-14

	STANDARD DETAIL	CITY OF WILMINGTON ENGINEERING OFFICE 305 CHESTNUT STREET PO. BOX 1810 WILMINGTON N.C. 28402 (910) 341-7807
DATE: APRIL, 2008	LANDSCAPE NOTES	
DRAWN BY JSR		
CHECKED BY B.P., P.E.		
SCALE NOT TO SCALE		SD 15-14

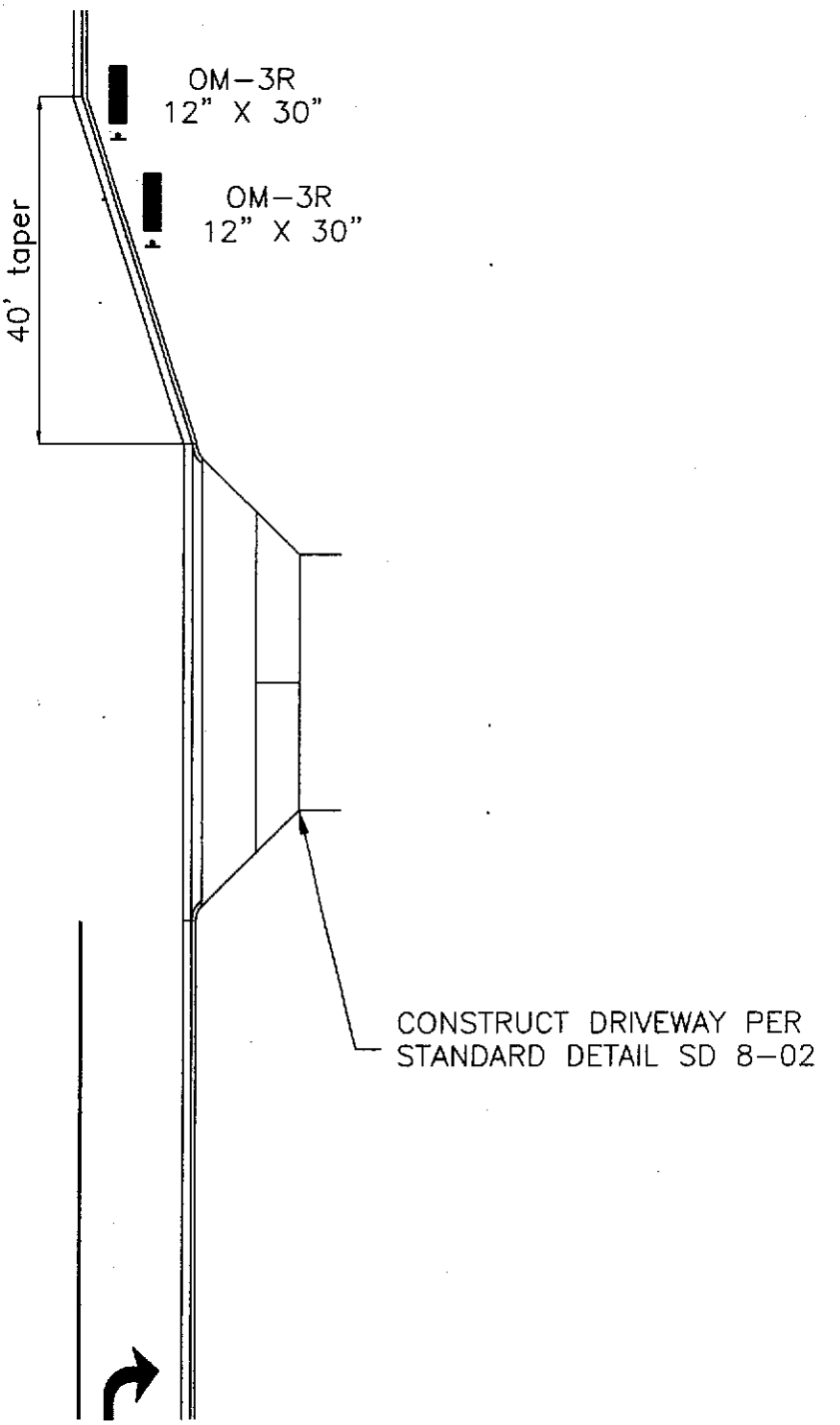

	STANDARD DETAIL	CITY OF WILMINGTON ENGINEERING OFFICE 305 CHESTNUT STREET PO. BOX 1810 WILMINGTON N.C. 28402 (910) 341-7807
DATE: 2003	STANDARD DRIVEWAY WITH RIGHT TURN BAY (DECELERATION LANE)	
DRAWN BY RB		
CHECKED BY B.P., P.E.		
SCALE NOT TO SCALE		SD 8-18

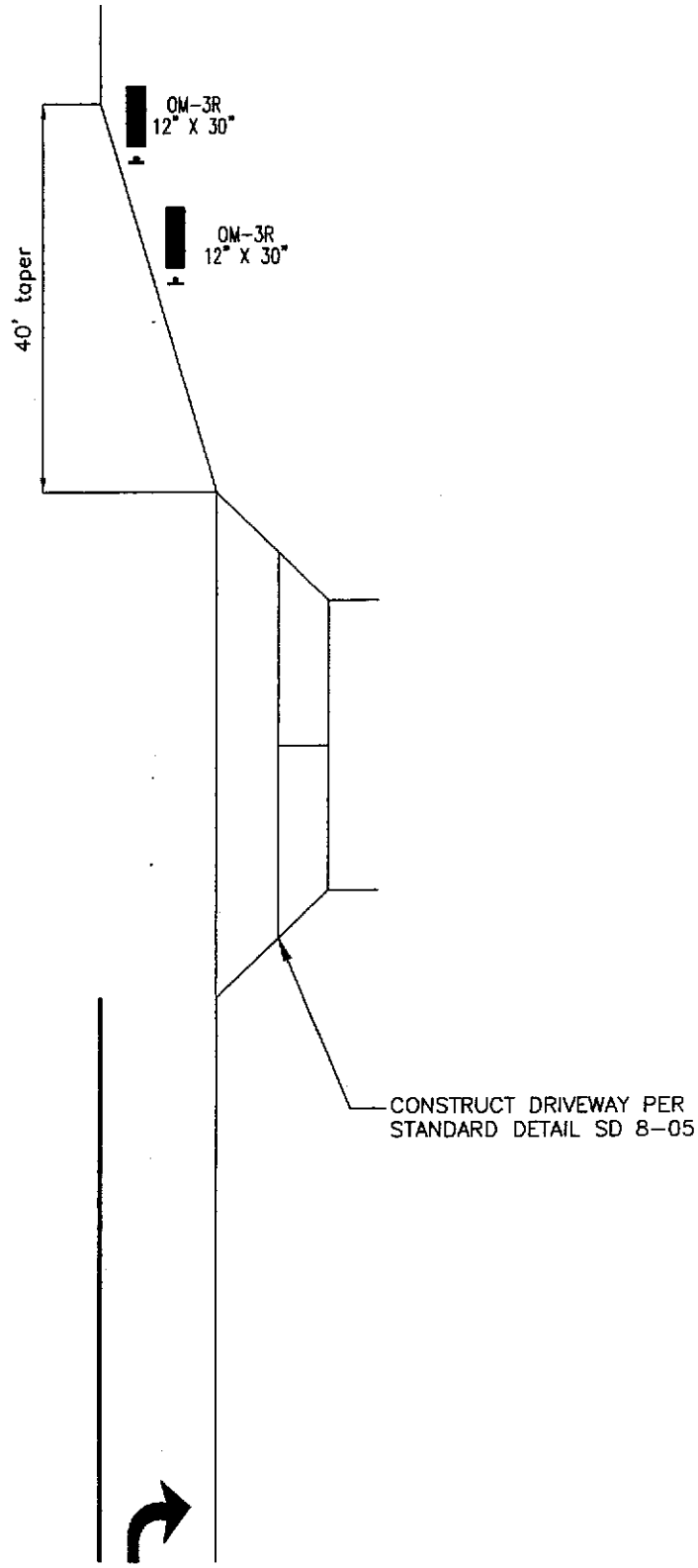

	STANDARD DETAIL	CITY OF WILMINGTON ENGINEERING OFFICE 305 CHESTNUT STREET PO. BOX 1810 WILMINGTON N.C. 28402 (910) 341-7807
DATE: 2003	STANDARD DRIVEWAY WITH RIGHT TURN BAY (DECELERATION LANE)	
DRAWN BY RB		
CHECKED BY B.P., P.E.		
SCALE NOT TO SCALE		SD 8-19

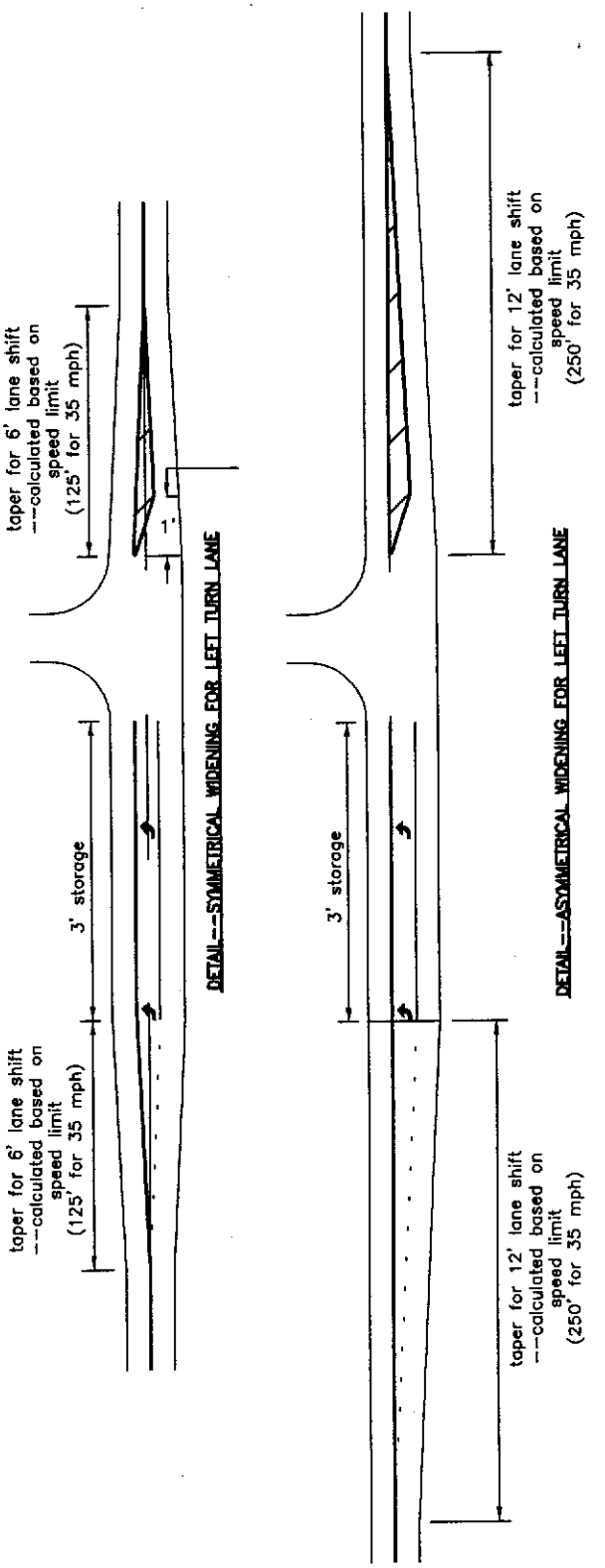

	STANDARD DETAIL	CITY OF WILMINGTON ENGINEERING OFFICE 305 CHESTNUT STREET PO. BOX 1810 WILMINGTON N.C. 28402 (910) 341-7807
DATE: 2003	WIDENING OF LEFT TURN LANE	
DRAWN BY RLB		
CHECKED BY JRF		
SCALE NOT TO SCALE		SD 8-20

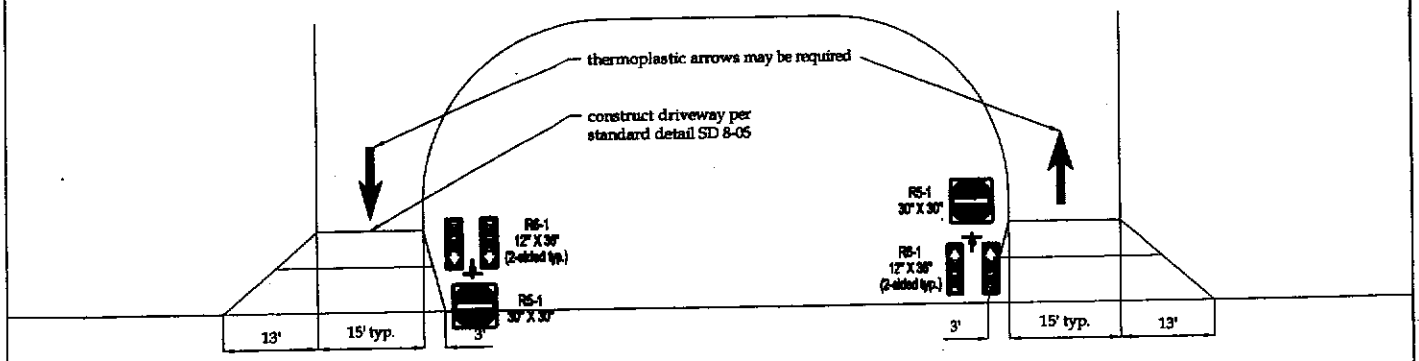

DETAIL--STANDARD ONE-WAY DRIVEWAY PAIR (no curb on street)

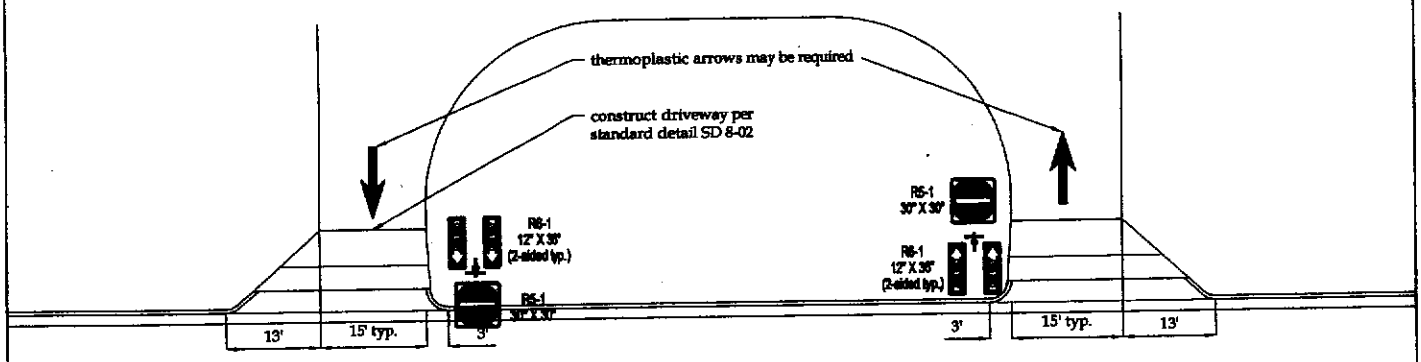

DETAIL--STANDARD ONE-WAY DRIVEWAY PAIR (curb on street)

	STANDARD DETAIL	CITY OF WILMINGTON ENGINEERING OFFICE 305 CHESTNUT STREET PO. BOX 1810 WILMINGTON N.C. 28402 (910) 341-7807
DATE: 2003	STANDARD ONE-WAY DRIVEWAY	
DRAWN BY RLB		
CHECKED BY JRF		
SCALE NOT TO SCALE		SD 8-21

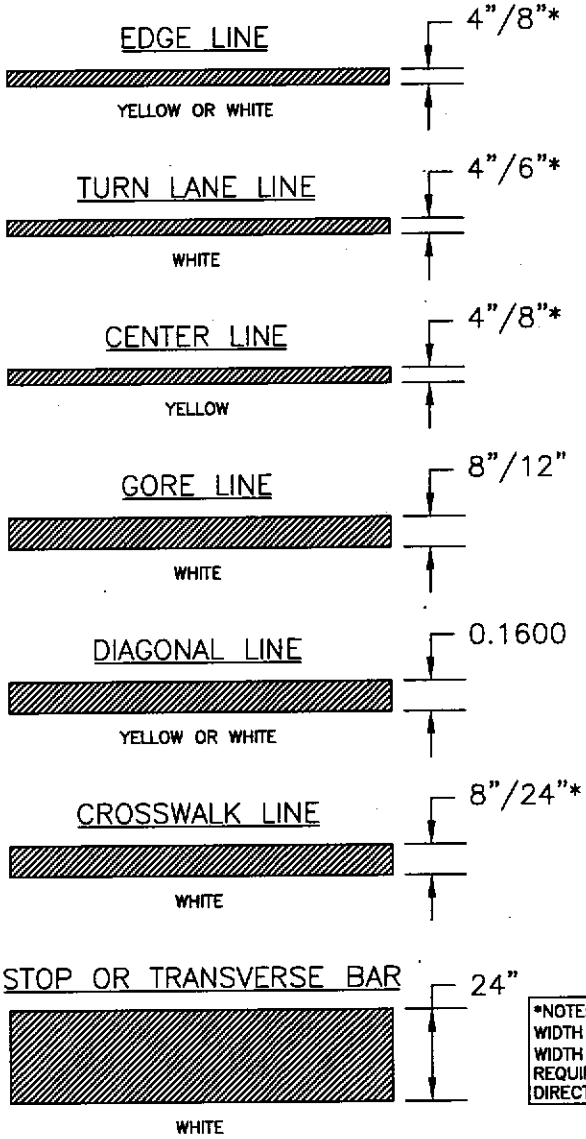

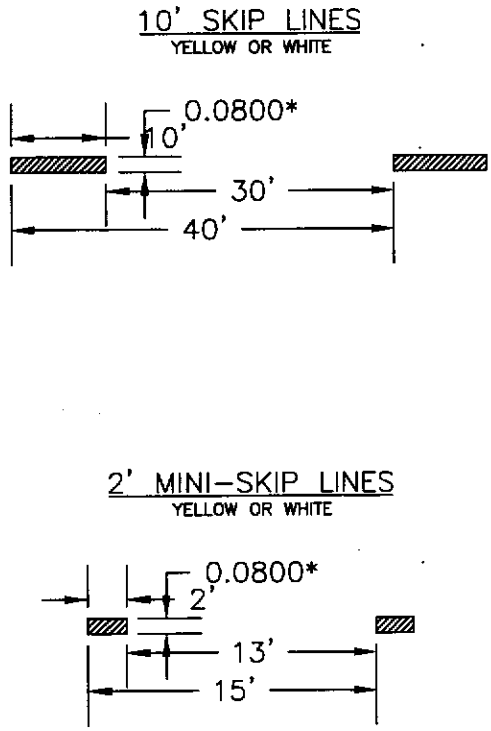

*NOTE: WHERE TWO WIDTHS ARE INDICATED, THE FIRST WIDTH APPLIES FOR A "NORMAL" WIDTH LINE. THE SECOND WIDTH APPLIES FOR A "WIDE" LINE. "WIDE" LINES ARE REQUIRED WHEN DESIGNATED IN THE PLANS, OR WHEN DIRECTED BY THE ENGINEER.

	STANDARD DETAIL	CITY OF WILMINGTON ENGINEERING OFFICE 305 CHESTNUT STREET PO. BOX 1810 WILMINGTON N.C. 28402 (910) 341-7807
DATE: 2003	PAVEMENT MARKINGS LINE TYPES	
DRAWN BY RLB		
CHECKED BY RLB/JRF		
SCALE NOT TO SCALE		SD 11-01

LANE LINE OFFSET DETAIL

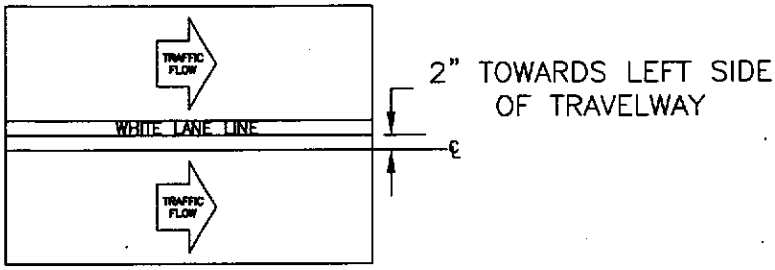

EDGE LINE OFFSET DETAIL

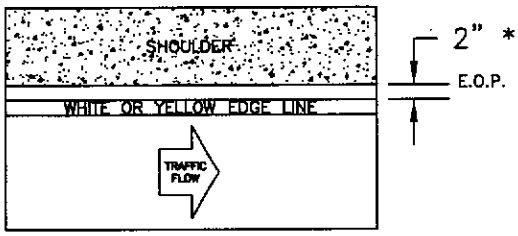

*REFER ALSO TO TABLE

CENTER LINE OFFSET DETAIL

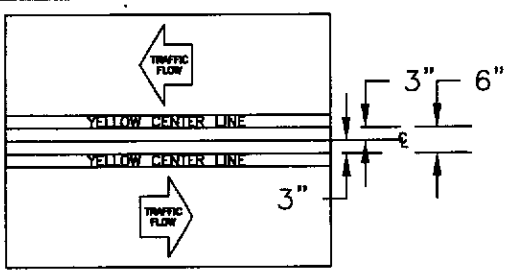

TABLE 1		
EDGE LINE OFFSETS FOR 2-LANE, 2-WAY ROADWAYS WITH UN-PAVED SHOULDERS		
WIDTH OF TRAVEL PAVEMENT	MAX. EDGE LINE OFFSET FROM E. O. P.	MINIMUM LANE WIDTH
16' – 20'	2"	8' – 10'
22'	2"	11'
24'	1'	11'
26'	2'	11'
28'	2'	12'
30'	3'	12'
32'	4'	12'

	STANDARD DETAIL	CITY OF WILMINGTON ENGINEERING OFFICE 305 CHESTNUT STREET PO. BOX 1810 WILMINGTON N.C. 28402 (910) 341-7807
DATE: 2003	PAVEMENT MARKINGS OFFSETS	
DRAWN BY RLB		
CHECKED BY RLB/JRF		
SCALE NOT TO SCALE		SD 11-02

RIGHT OR LEFT TURN ARROW

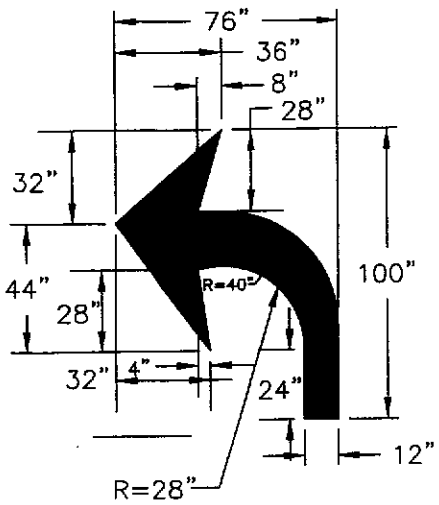

COMBINATION STRAIGHT AND LEFT OR RIGHT TURN ARROW

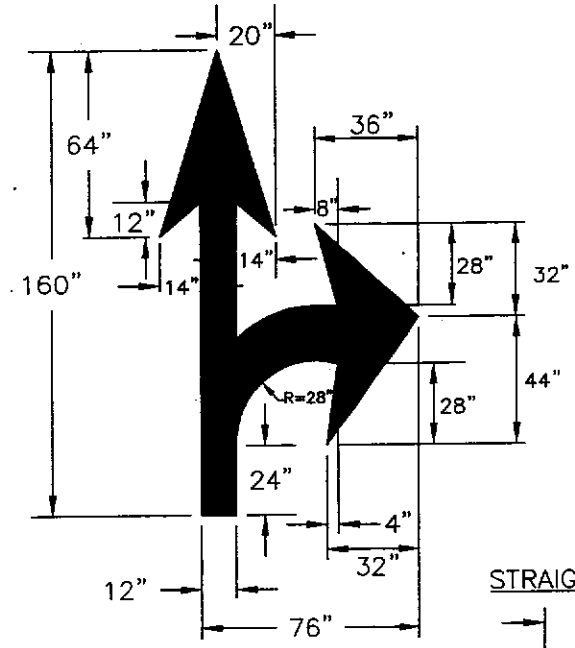

STRAIGHT ARROW

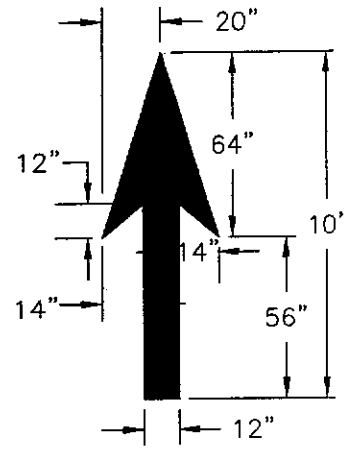

COMBINATION LEFT AND STRAIGHT AND RIGHT TURN ARROW

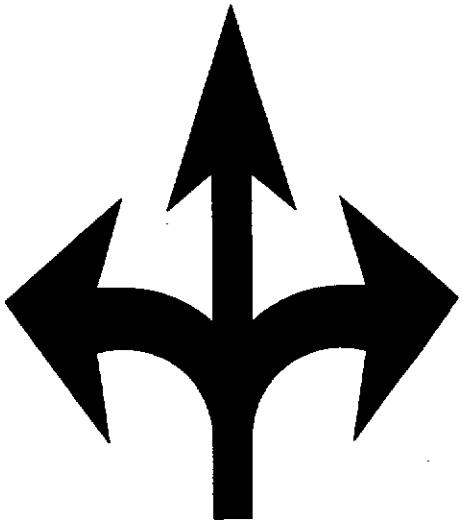

COMBINATION LEFT AND RIGHT TURN ARROW

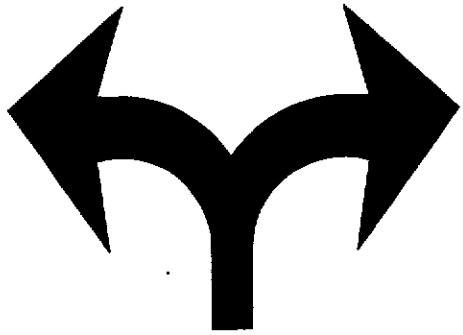

GENERAL NOTES

- ALL PAVEMENT MARKING SYMBOLS SHALL BE WHITE IN COLOR
- PAVEMENT MARKING SYMBOLS SHALL NOT BE LOCATED AS TO ENCROACH INTO INTERSECTION AREAS.
- ON PORTLAND CEMENT CONCRETE PAVEMENTS, PAVEMENT MARKING SYMBOLS SHALL NOT BE PLACED ACROSS TRANSVERSE EXPANSION JOINTS UNLESS APPROVED BY THE ENGINEER.

	STANDARD DETAIL	CITY OF WILMINGTON ENGINEERING OFFICE 305 CHESTNUT STREET PO. BOX 1810 WILMINGTON N.C. 28402 (910) 341-7807
DATE: 2003	PAVEMENT MARKINGS ARROW SYMBOLS	
DRAWN BY RLB		
CHECKED BY RLB/JRF		
SCALE NOT TO SCALE		SD 11-03

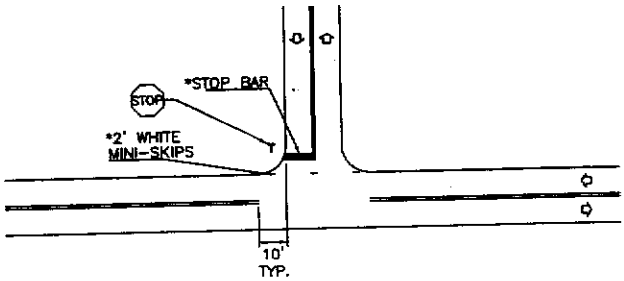

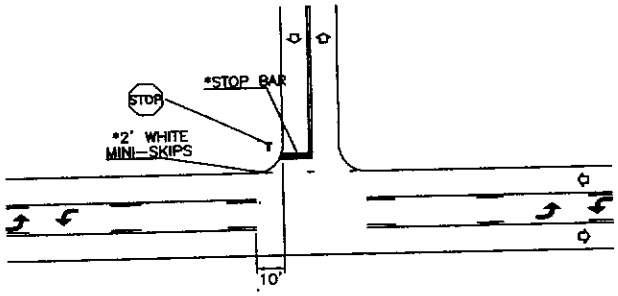

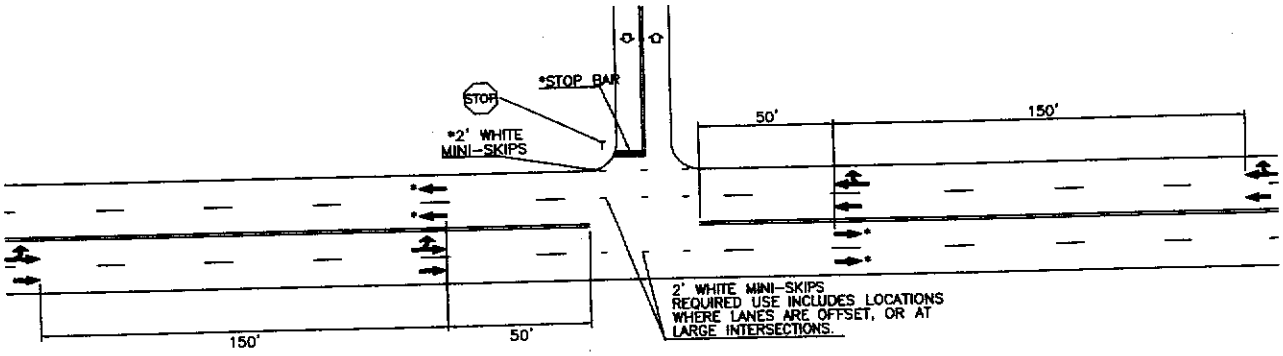

LEGEND

- DIRECTION OF TRAFFIC FLOW
- PAVEMENT MARKING SYMBOLS
- * OPTIONAL

	STANDARD DETAIL	CITY OF WILMINGTON ENGINEERING OFFICE 305 CHESTNUT STREET PO. BOX 1810 WILMINGTON N.C. 28402 (910) 341-7807
DATE: 2003	PAVEMENT MARKINGS NON-SIGNALIZED INTERSECTIONS	
DRAWN BY RLB		
CHECKED BY RLB/JRF		
SCALE NOT TO SCALE		SD 11-04

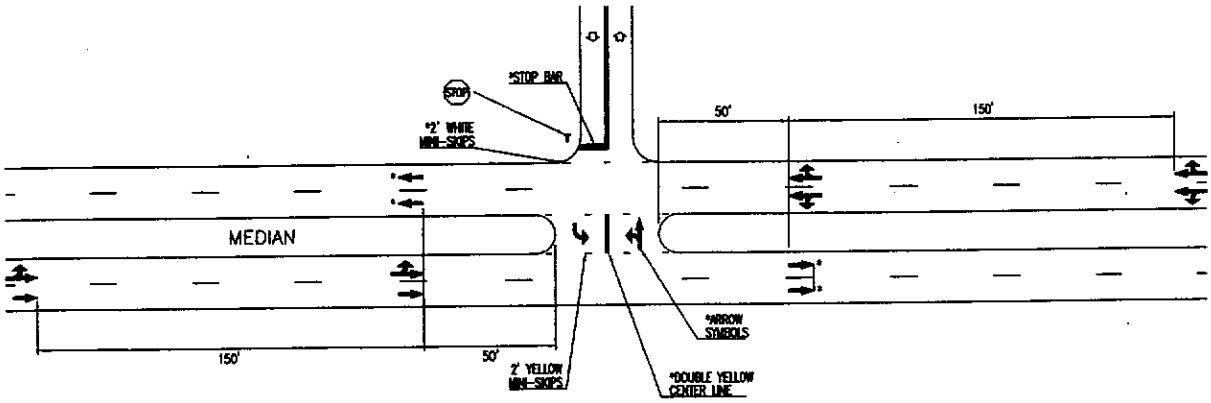

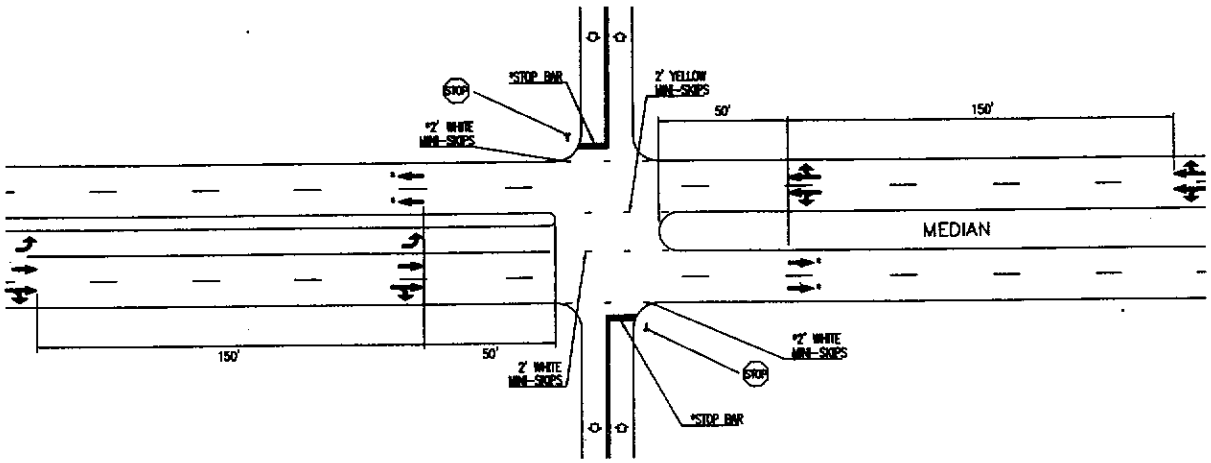

LEGEND

- DIRECTION OF TRAFFIC FLOW
- PAVEMENT MARKING SYMBOLS
- * OPTIONAL

	STANDARD DETAIL	CITY OF WILMINGTON ENGINEERING OFFICE 305 CHESTNUT STREET PO. BOX 1810 WILMINGTON N.C. 28402 (910) 341-7807
DATE: 2003	PAVEMENT MARKINGS NON-SIGNALIZED INTERSECTIONS	
DRAWN BY RLB		
CHECKED BY RLB/JRF		
SCALE NOT TO SCALE		SD 11-05

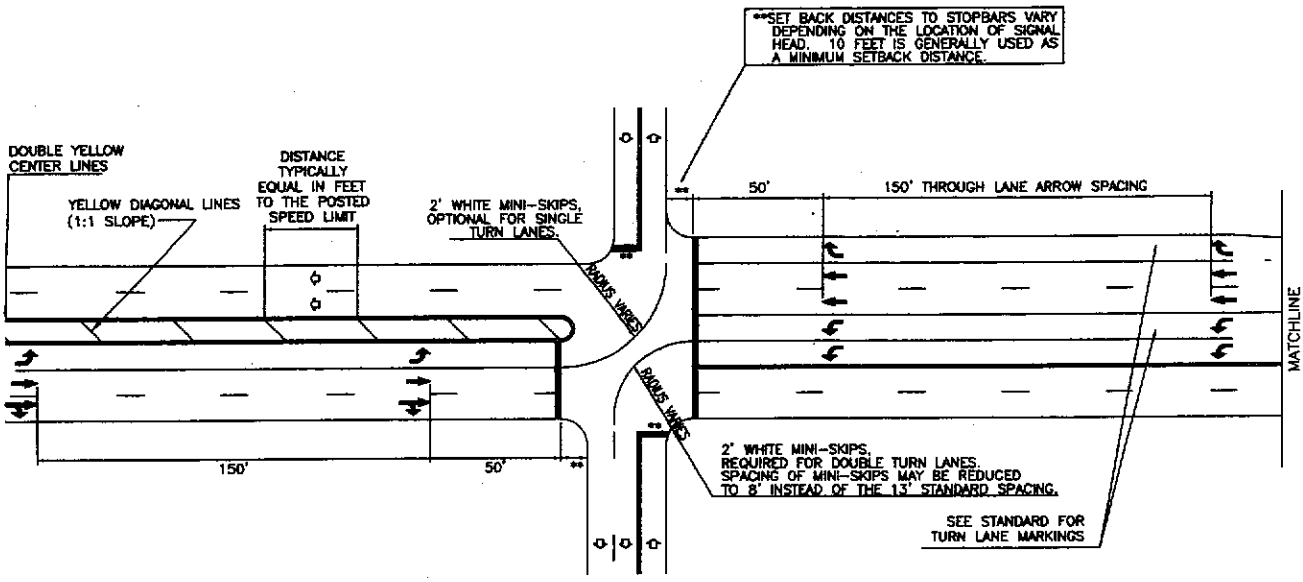

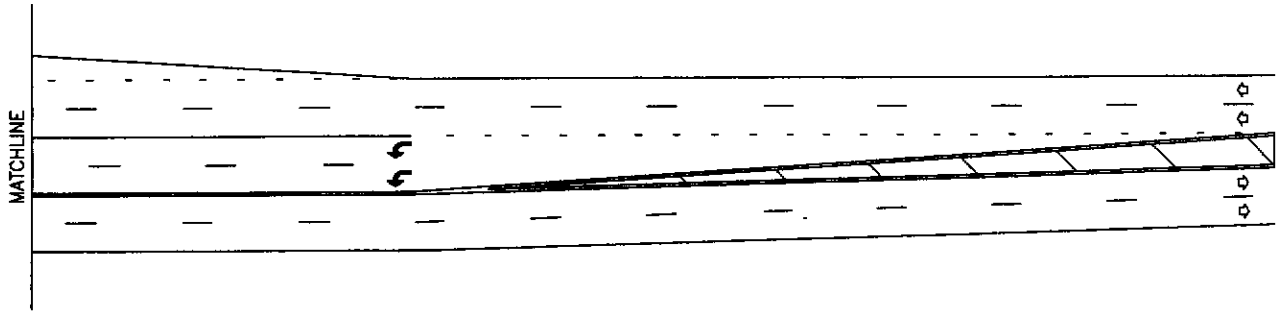

LEGEND

- DIRECTION OF TRAFFIC FLOW
- PAVEMENT MARKING SYMBOLS
- * OPTIONAL

DATE: 2003	STANDARD DETAIL	CITY OF WILMINGTON ENGINEERING OFFICE 305 CHESTNUT STREET PO. BOX 1810 WILMINGTON N.C. 28402 (910) 341-7807
DRAWN BY RLB	PAVEMENT MARKINGS SIGNALIZED INTERSECTIONS	
CHECKED BY DRB/JRG		
SCALE NOT TO SCALE		SD 11-06

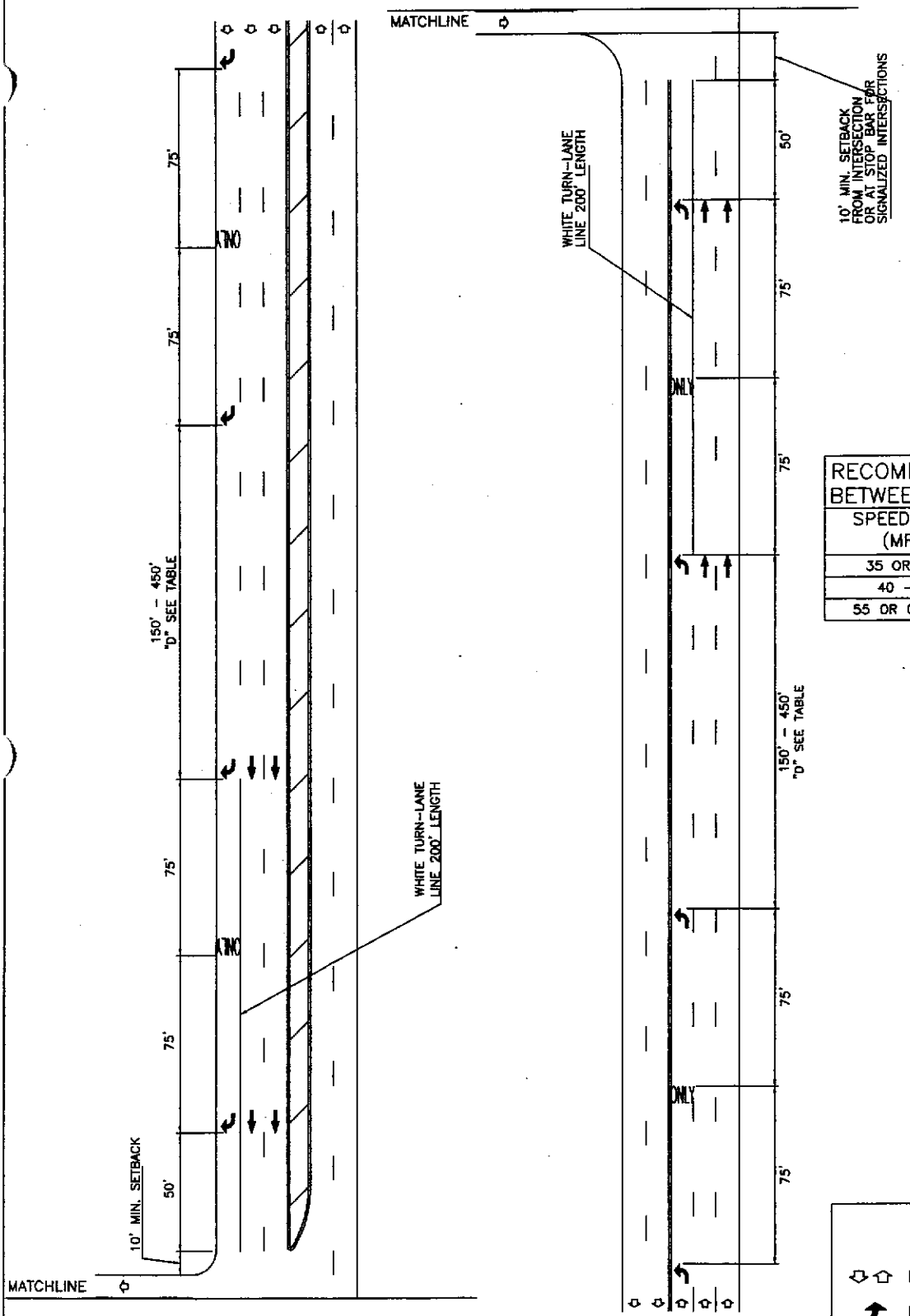

RECOMMENDED SPACING "D" BETWEEN SETS OF SYMBOLS	
SPEED LIMIT (MPH)	SPACING
35 OR LESS	150'
40 – 50	200'
55 OR GREATER	450'

LEGEND

DIRECTION OF TRAFFIC FLOW

PAVEMENT MARKING SYMBOLS

STANDARD DETAIL

DATE: 2003

DRAWN BY RLB

CHECKED BY DRB/JRF

SCALE NOT TO SCALE

PAVEMENT MARKINGS THROUGH-LANE DROP AT INTERSECTION

CITY OF WILMINGTON
ENGINEERING OFFICE
305 CHESTNUT STREET
PO. BOX 1810
WILMINGTON N.C. 28402
(910) 341-7807

SD 11-07

DIRECT TAPER TURN LANE

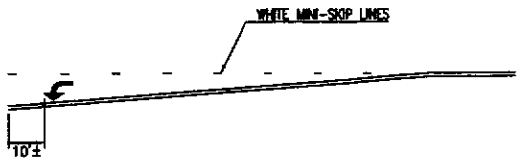

TURN LANE BAYS < 125'

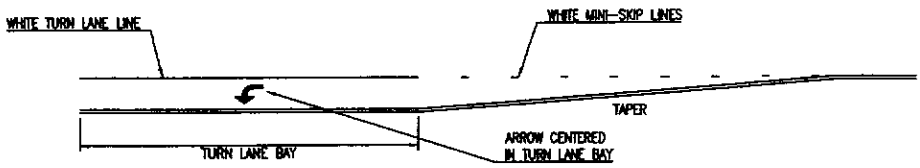

TURN LANE BAYS 125' -250'

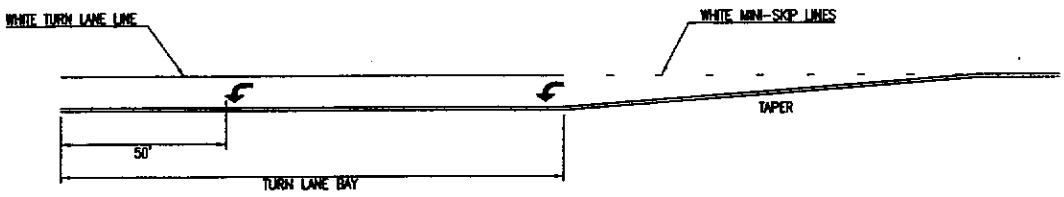

TURN LANE BAYS > 250'

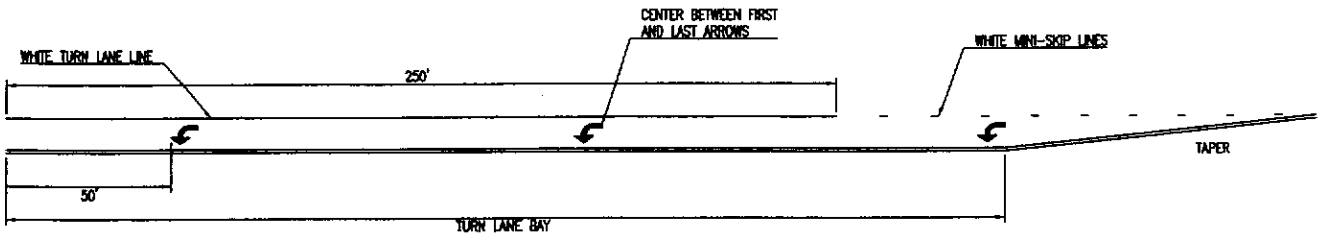

	STANDARD DETAIL	CITY OF WILMINGTON ENGINEERING OFFICE 305 CHESTNUT STREET PO. BOX 1810 WILMINGTON N.C. 28402 (910) 341-7807
DATE: 2001	PAVEMENT MARKINGS TURN LANES	
DRAWN BY RLB		
CHECKED BY DRB/JRF		
SCALE NOT TO SCALE		SD 11-08

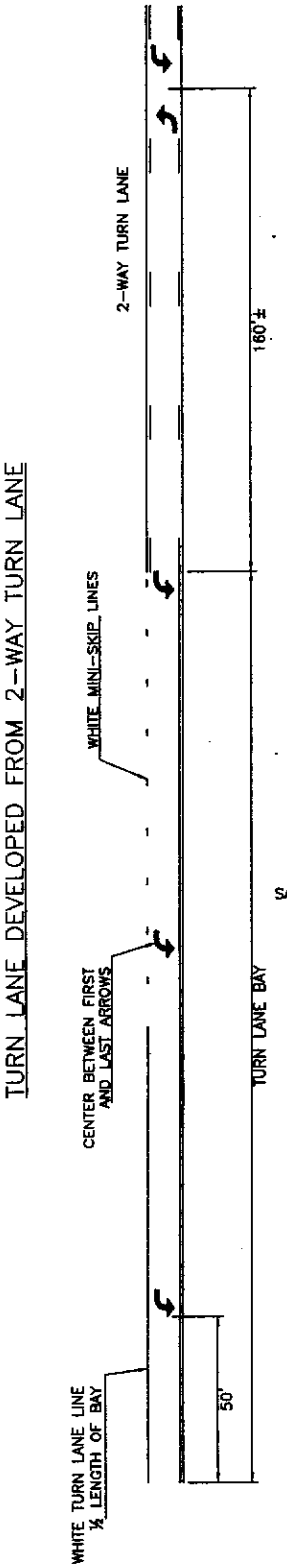

SAME PAVEMENT MARKING LINES, NUMBER OF ARROWS, AND ARROW SPACING APPLY AS FOR THE VARIOUS TURN LANE BAY LENGTHS SHOWN IN SD 16-08

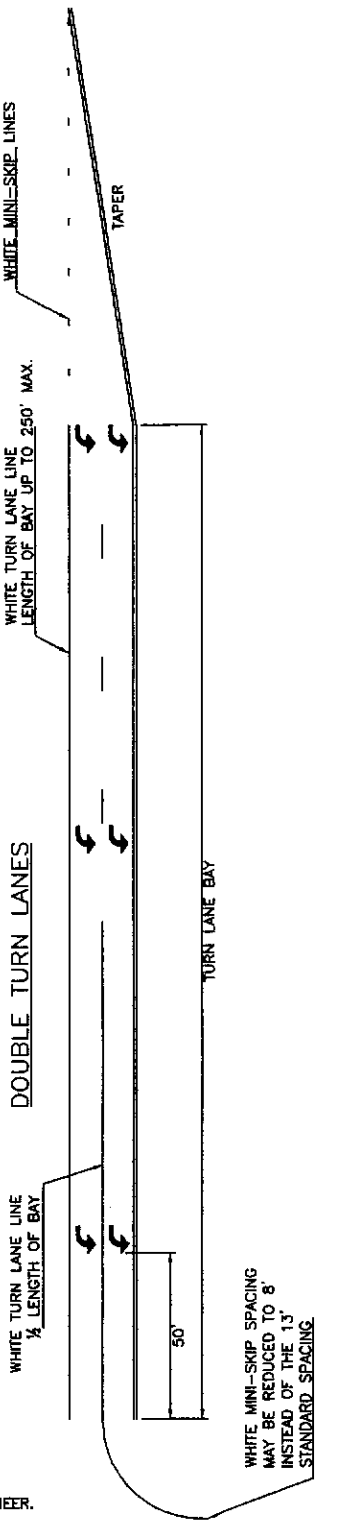

GENERAL NOTES

- ALL TURN LANE MARKINGS SHOWN APPLY FOR RIGHT AND LEFT TURN LANES.
- NUMBER OF ARROWS SHOWN IS THE MINIMUM REQUIRED. ADDITIONAL ARROWS MAY BE USED AS DETERMINED BY THE ENGINEER.

DATE: 2003	STANDARD DETAIL	CITY OF WILMINGTON ENGINEERING OFFICE 305 CHESTNUT STREET PO. BOX 1810 WILMINGTON N.C. 28402 (910) 341-7807
DRAWN BY RLB	PAVEMENT MARKINGS TURN LANES	
CHECKED BY DRB/JRF		
SCALE NOT TO SCALE		SD 11-09

PAVEMENT MARKER SPACING CHART

TYPE OF PAVEMENT MARKING	TYPICAL SPACING in FT (speed limit <= 45mph)
Centerlines--along through lanes	40
Centerlines--along horizontal curves	per Traffic Engineering
Skip Lines--along through lanes	40
Turn Lanes--Skip Lines	40
Turn Lanes--Solid Lane Lines	20
Turn Lanes--Centerlines	40
Painted Islands--White	20
Painted Islands--Yellow	40
Raised Median Islands	40
Other Markings	per Traffic Engineering

GENERAL NOTES

- CRYSTAL/RED MARKERS SHALL BE USED ALONG WHITE PAVEMENT MARKINGS UNLESS OTHERWISE DIRECTED BY TRAFFIC ENGINEERING. RED SIDE OF MARKER TO FACE "WRONG-WAY" TRAFFIC.
- PAVEMENT MARKERS SHOULD NOT BE PLACED CLOSER THAN 2 INCHES TO A PAVEMENT CONSTRUCTION JOINT, EXCEPT WHEN PLACED BETWEEN DOUBLE YELLOW CENTERLINES.
- PAVEMENT MARKERS SHALL NOT BE PLACED DIRECTLY ON PAVEMENT MARKINGS.
- PAVEMENT MARKERS USED IN CONJUNCTION WITH DOUBLE YELLOW CENTERLINES SHALL BE PLACED MID-WAY BETWEEN THE LINES, WITH A GAP BETWEEN MARKER AND MARKINGS.

PLACEMENT ALONG YELLOW CENTERLINES

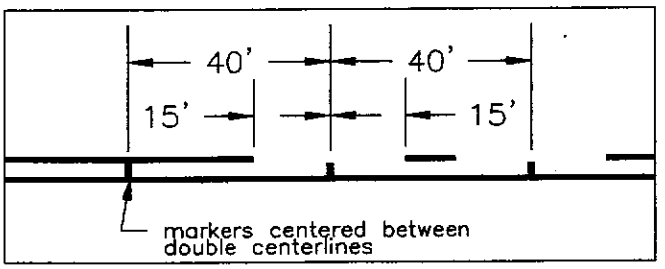

PLACEMENT ALONG TURN LANE LINES

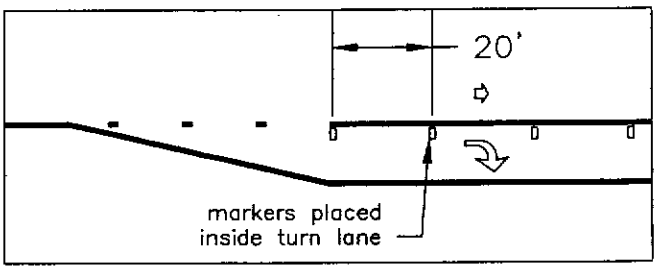

PLACEMENT ALONG WHITE SKIP LINES

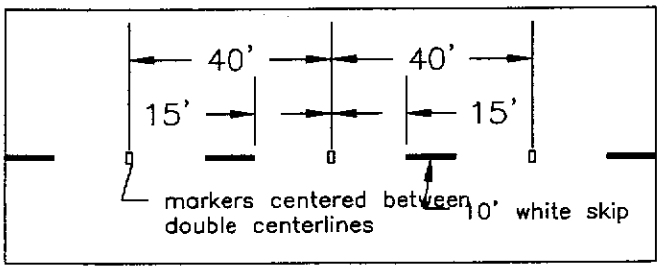

LEGEND

- DIRECTION OF TRAFFIC FLOW
- AMBER / AMBER MARKER
- CRYSTAL / RED MARKER

DATE:	2003
DRAWN BY	RLB
CHECKED BY	DRB/JRF
SCALE	NOT TO SCALE

STANDARD DETAIL

PAVEMENT MARKINGS RAISED PAVEMENT MARKERS

CITY OF WILMINGTON
ENGINEERING OFFICE
305 CHESTNUT STREET
PO. BOX 1810
WILMINGTON N.C. 28402
(910) 341-7807

SD 11-10

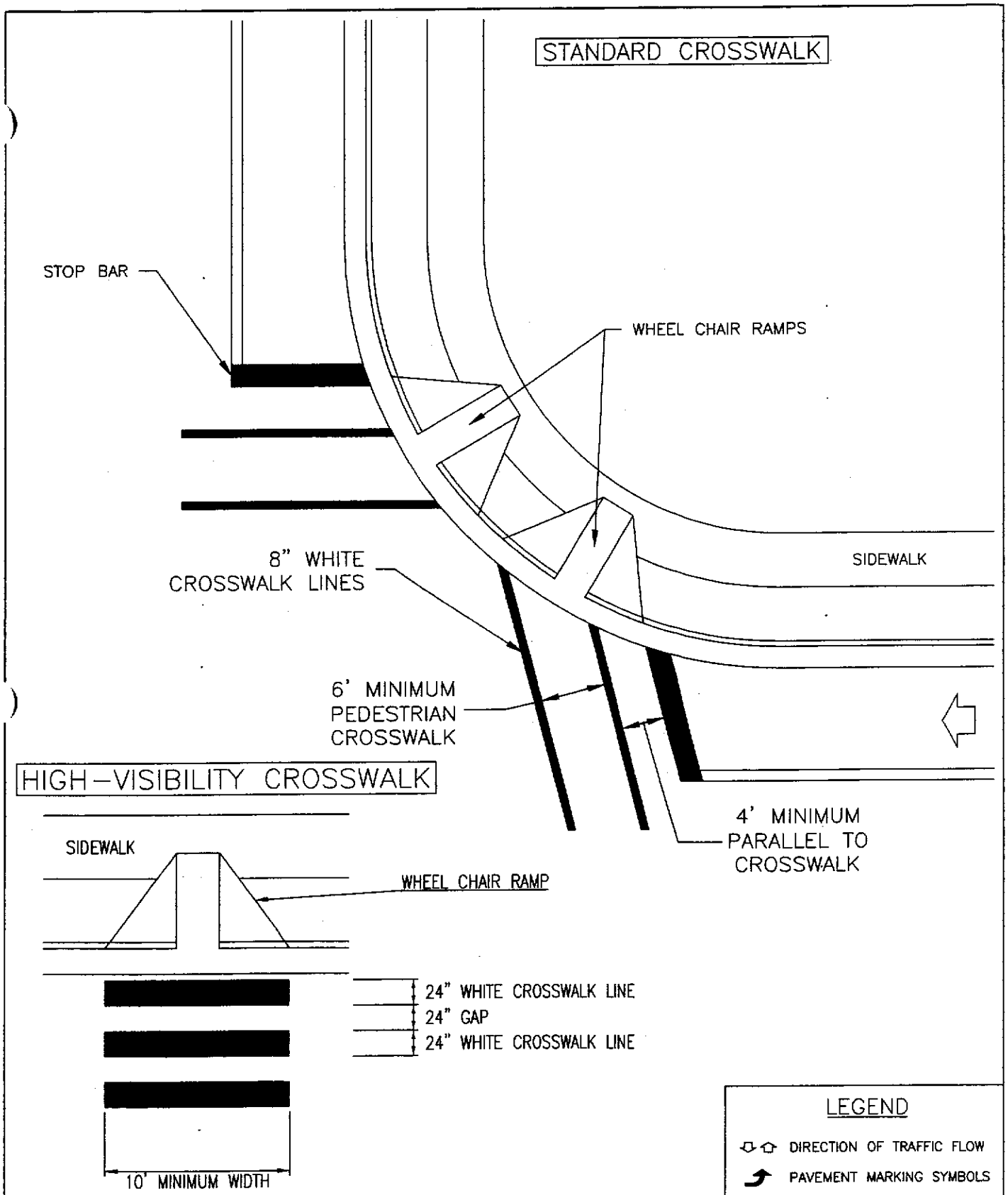

	STANDARD DETAIL	CITY OF WILMINGTON ENGINEERING OFFICE 305 CHESTNUT STREET PO. BOX 1810 WILMINGTON N.C. 28402 (910) 341-7807
DATE: 2001	PAVEMENT MARKINGS WHEEL CHAIR RAMPS	
DRAWN BY RLB		
CHECKED BY DRB/JRF		
SCALE NOT TO SCALE		SD 11-11

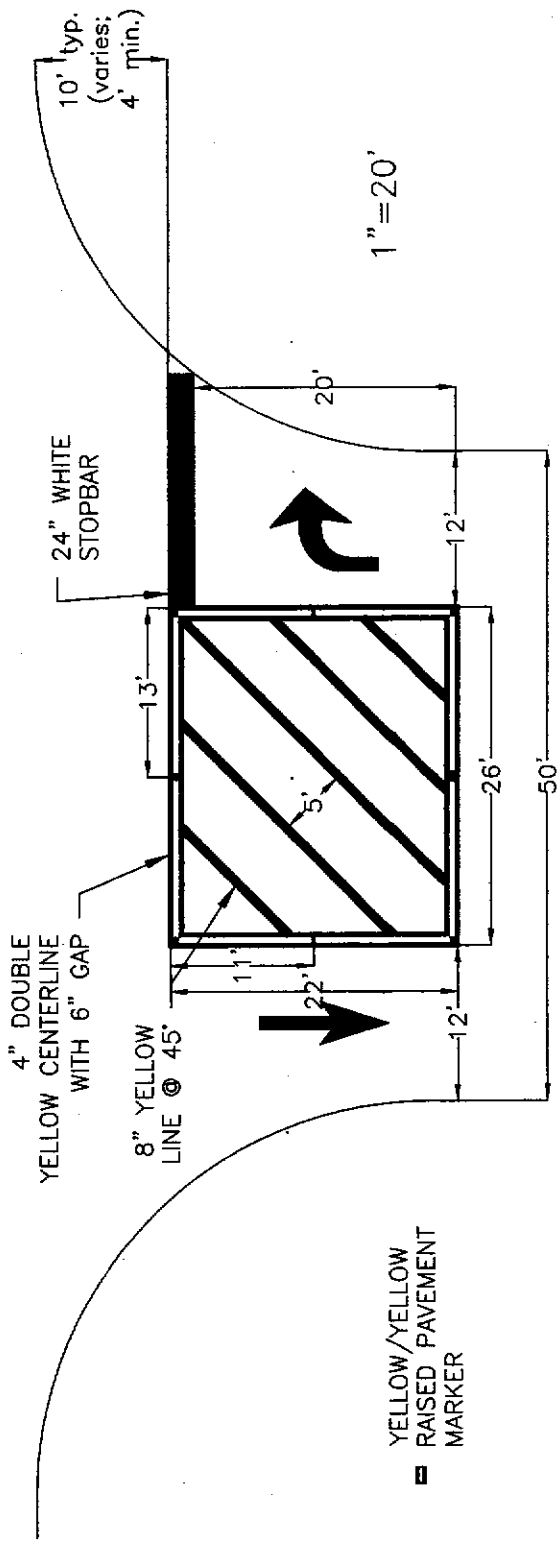

	STANDARD DETAIL	CITY OF WILMINGTON ENGINEERING OFFICE 305 CHESTNUT STREET PO. BOX 1810 WILMINGTON N.C. 28402 (910) 341-7807
DATE: 2003	THERMOPLASTIC PAVEMENT MARKINGS - 50' DRIVEWAY (NO LEFT TURN)	
DRAWN BY RLB		
CHECKED BY JRF		
SCALE NOT TO SCALE		SD 11-12

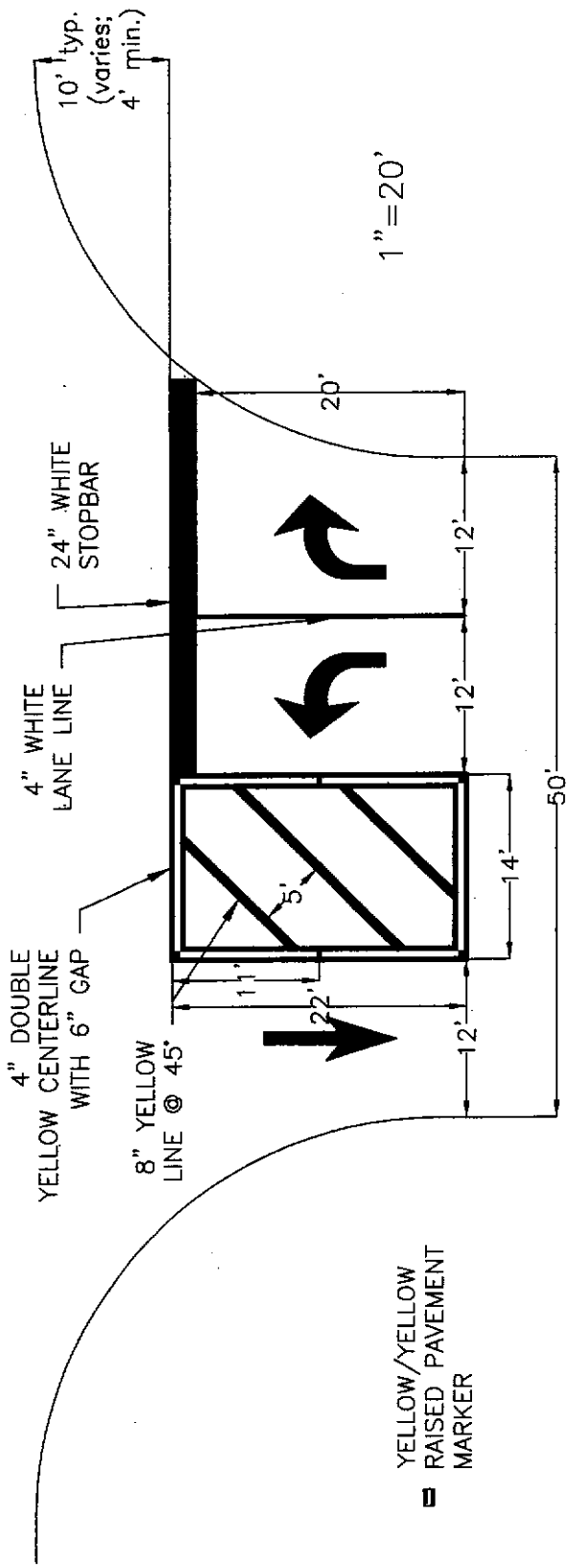

	STANDARD DETAIL	CITY OF WILMINGTON ENGINEERING OFFICE 305 CHESTNUT STREET PO. BOX 1810 WILMINGTON N.C. 28402 (910) 341-7807
DATE: 2003	THERMOPLASTIC PAVEMENT MARKINGS-50' DRIVEWAY	
DRAWN BY RLB		
CHECKED BY JRF		
SCALE NOT TO SCALE		SD 11-13 SHEET 1 of 2

THERMOPLASTIC PAVEMENT
MARKINGS-50' DRIVEWAY
SD 11-13

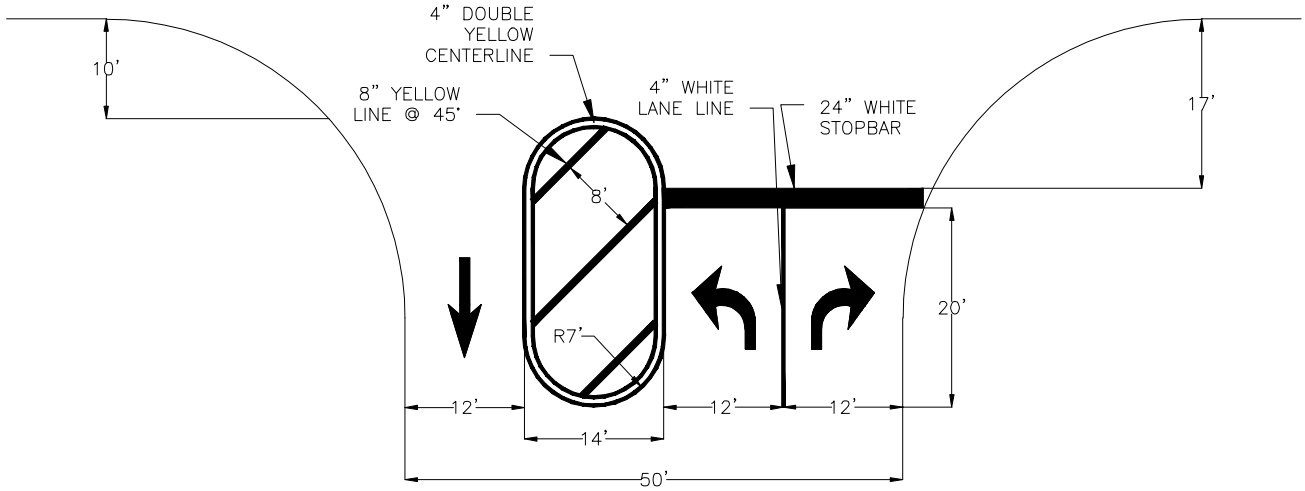

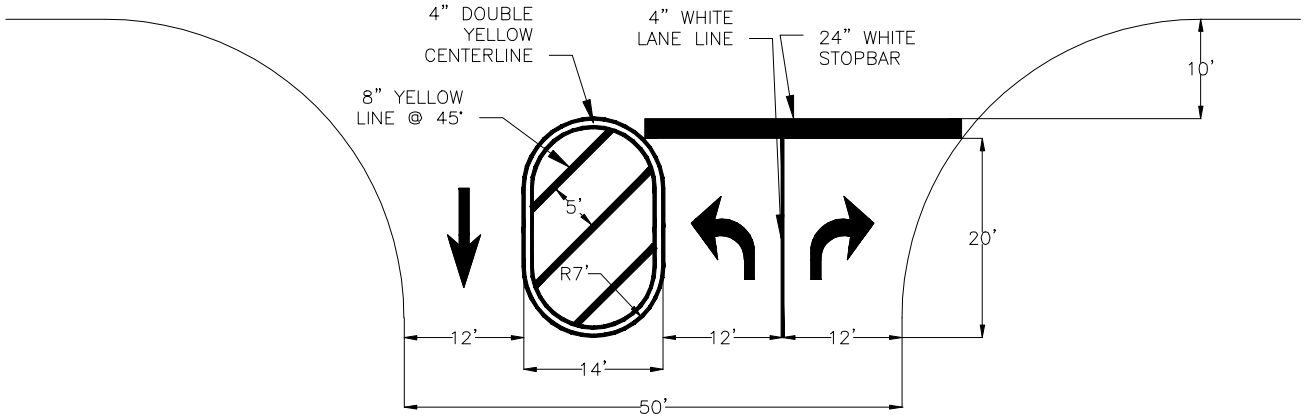

	STANDARD DETAIL	CITY OF WILMINGTON ENGINEERING OFFICE 305 CHESTNUT STREET PO. BOX 1810 WILMINGTON N.C. 28402 (910) 341-7807
DATE: 2003	THERMOPLASTIC PAVEMENT MARKINGS-50' DRIVEWAY	
DRAWN BY RLB		
CHECKED BY JRF		
SCALE NOT TO SCALE		SD 11-13 SHEET 2 OF 2

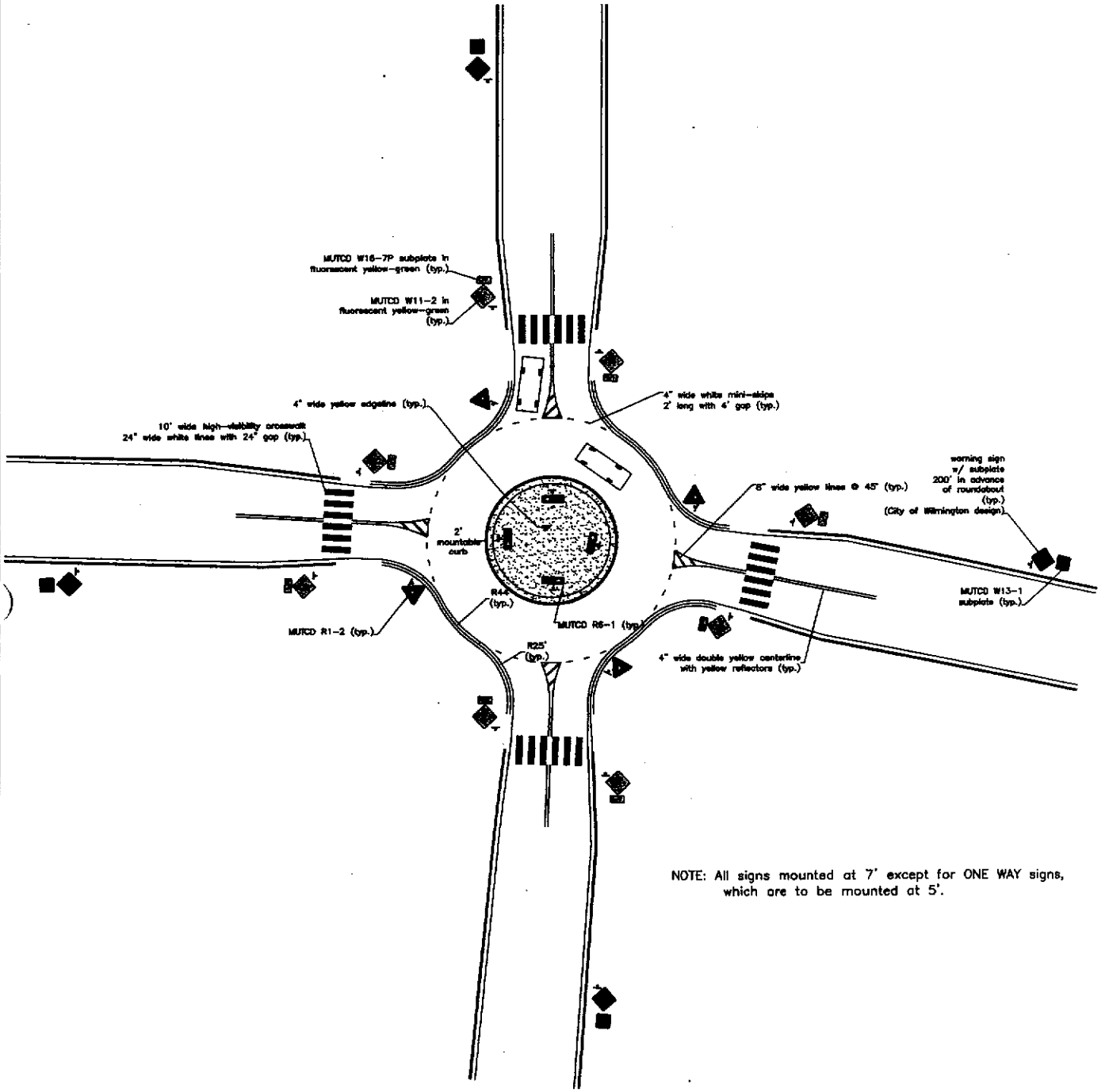

NOTE: All signs mounted at 7' except for ONE WAY signs, which are to be mounted at 5'.

	STANDARD DETAIL	CITY OF WILMINGTON ENGINEERING OFFICE 305 CHESTNUT STREET PO. BOX 1810 WILMINGTON N.C. 28402 (910) 341-7807
DATE: 2003	PAVEMENT MARKINGS ROUNDABOUT	
DRAWN BY RLB		
CHECKED BY JRF		
SCALE NOT TO SCALE		SD 11-14

VIII

PUBLIC TRANSPORTATION SYSTEM

VIII

PUBLIC TRANSPORTATION

TABLE OF CONTENTS

SECTION		PAGE
A.	GENERAL	8-1
B.	MINIMUM DESIGN SPECIFICATIONS AND STANDARDS	8-1
C.	MINIMUM CONSTRUCTION STANDARDS AND METERIALS	8-5
D.	GENERAL GUIDE FOR THE PROPER LOCATION OF TERMINAL FACILITIES	8-5

A. GENERAL

The design and construction specifications and standards as specified herein shall be minimum required standards for the City of Wilmington.

B. MINIMUM DESIGN SPECIFICATIONS AND STANDARDS

1. Terminal Facilities

a. Bus Turnouts

Turnout lanes shall be provided adjacent to the roadway to allow buses to pull in and out of the flow of traffic with reasonable ease and to park parallel to and out of the flow of traffic. The minimum acceptable design standards shall be those as shown in Figure 1, or as approved by the Subdivision Review Board.

b. Passenger Shelters

Shelters shall be provided to shield the users of the transportation system from inclement weather conditions. The shelter shall be designed to accommodate the anticipated number of users, but shall not be designed to accommodate less than five (5) people.

In designing the shelter, proper cover and overhand, wind resistance, height and width (clearance), seating and acceptable construction materials shall be considered. The shelter may be semi-enclosed (three sides) or be free-standing, dependent on the proper cover and overhang. The minimum acceptable design specifications for a shelter are shown on Figures 2 and 3.

c. Signs and Markings

Identification signs and/or letters shall be prominently displayed on the shelter and/or adjacent to the turnout lane area which shall consist of the words "BUS STOP" in letters not less than three and one-half (3-1/2) inches in height and lettering thickness of not less than one-half (1/2) inch in width. Signs and/or markings for no parking and lane divisions, as required by the Subdivision Review Board, shall be provided by the subdivider and shall conform to the City's standards for traffic control devices.

d. Dedication of the Terminal Facilities

Public Dedication - Upon the dedication of the terminal facilities for public use and acceptance by the public, the Transit Authority shall assume the responsibility of maintaining the passenger shelter and the City shall have the responsibility of maintaining the turnout lane and walkway area. The City shall,

after the initial acquisition and proper installation of all signs and/or markings by the subdivider, assume the responsibility of the maintenance of said signs and/or markings.

PUBLIC TRANSPORTATION SERVICE

MINIMUM DESIGN STANDARDS AND SPECIFICATIONS
TERMINAL FACILITIES AND TURNOUT LANES

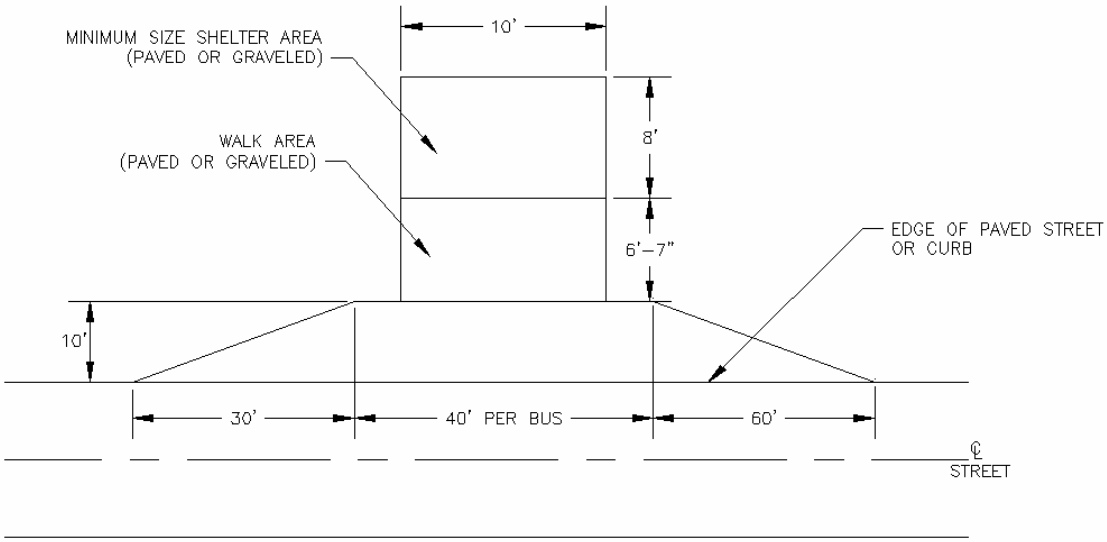

FIGURE 1

PUBLIC TRANSPORTATION SYSTEM

PASSENGER SHELTERS
MINIMUM DESIGN SPECIFICATIONS

The specifications as shown in Figures 2 and 3 are established for the purpose of specifying the minimum size and example, and not for the purpose of establishing a typical acceptable architectural design. The design of shelters may be such which will be in harmony with the theme of the subdivision or in harmony with the existing terrain or structures.

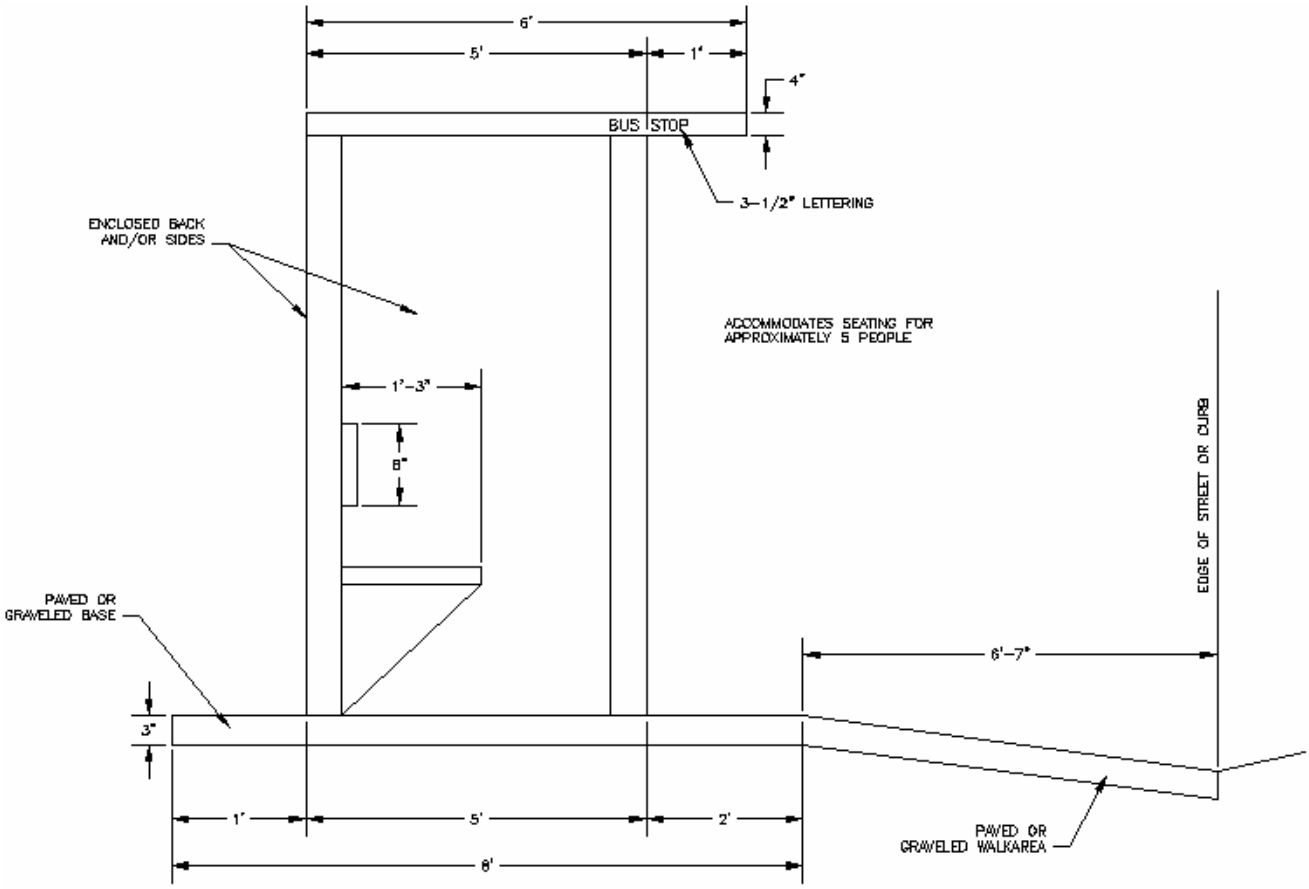

FIGURE 2

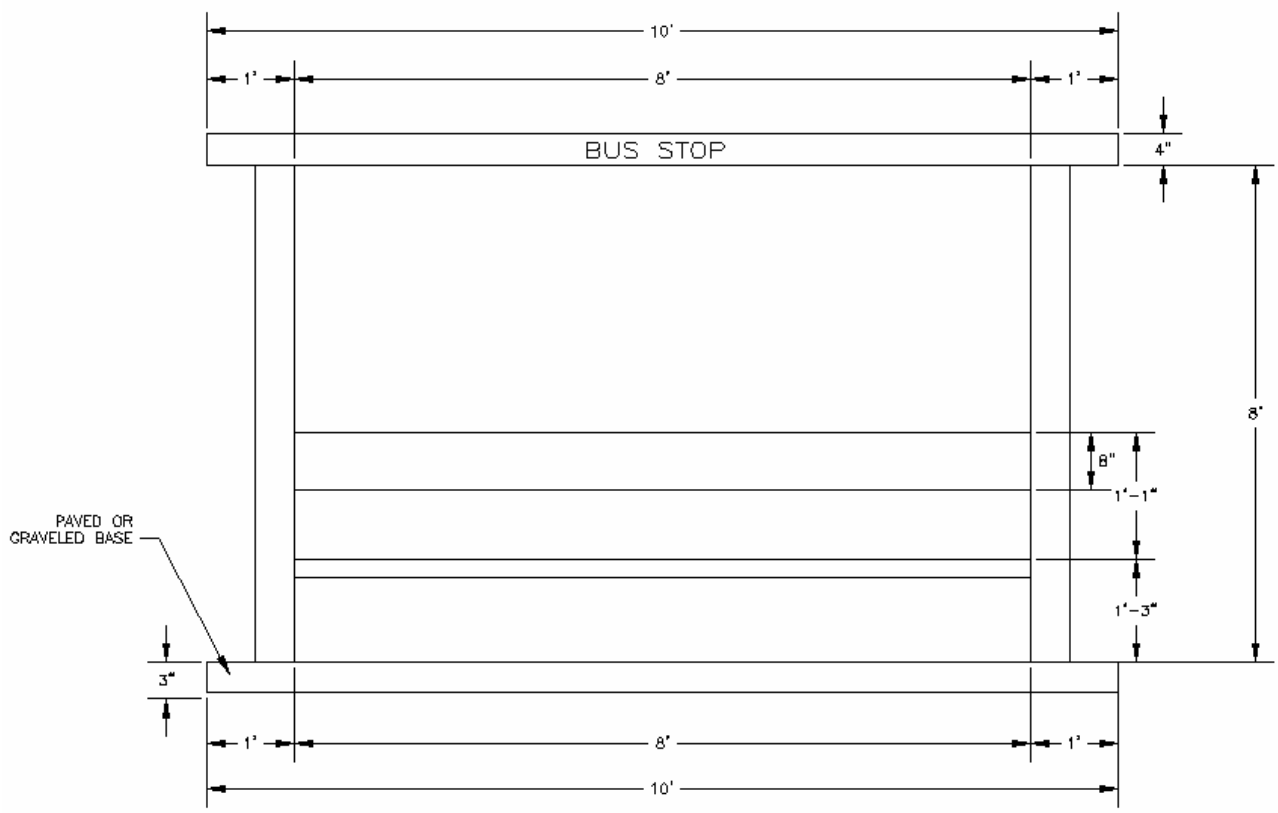

FIGURE 3

C. MINIMUM CONSTRUCTION STANDARDS AND MATERIALS

1. Terminal Facilities

a. Turnouts

The construction standards, methods and materials for turnouts shall be in accordance with the construction standards, methods and materials established for public streets as specified herein.

The area located between the shelter and the paved bus lane shall be paved (asphalt or concrete) or provided with gravel three (3) inches in depth.

b. Passenger Shelters

Shelters shall be constructed to meet the size needed to accommodate its anticipated passenger use. The site shall not be less than that specified in Figures 2 and 3. The acceptable materials are as follows:

(1) Wood (treated with a preservative)
(2) Brick
(3) Concrete block
(4) Metals
(5) Stable acrylics (clear or smoked)
(6) Combinations of the above

The structure shall meet the structural requirements of the North Carolina State building Code.

The area beneath the shelter as shown in Figures 2 and 3 shall be paved (asphalt or concrete) or graveled for a depth of three (3) inches.

D. GENERAL GUIDE FOR THE PROPER LOCATIN OF TERMINAL FACILITIES

1. General

Careful analysis will show that the proper location for terminal facilities will vary with circumstances and that need can be shown for near-side, far-side and mid-block locations. The locations of terminal facilities should be standardized within the general community so as to avoid undue confusion. However, standardization should not be a substitute for sound judgment whenever conditions render the standard practice inappropriate.

The motor bus is a large and at times awkward vehicle, but the fact that it can carry more people per foot of road space than other vehicles warrants particular consideration in the allocation of street area. It is important that the presence of buses does not reduce the capacity of the road-way so as to result in a net loss in its passenger-carrying ability. Therefore, it is imperative that terminal facilities be of adequate length and so located that the net adverse effect of the terminal facility on the traffic stream (including pedestrians) is kept to a minimum. When terminal facilities of adequate length are provided, and parking restrictions enforced, proper usage of the facility on the part of bus operators can be expected.

2. General Considerations (Safety)

a. Consideration must be given to the effect that the stopped bus will have on sight distance for pedestrians using the parallel and transverse crosswalks at the intersection.

b. The terminal facility must be located so that passengers may alight and board with reasonable safety.

c. Consideration must be given to the effect that the stopped bus will have on-sight distance for parallel traffic and cross traffic. For instance, at a near-side stop, vehicular right turns are facilitated and sight distance is improved when the terminal facilities are set back from the crosswalk.

d. The conflicts in the traffic stream caused by a bus, as it enters or leaves a terminal facility, must be considered.

3. Traffic Flow

a. The position of a bus entering, leaving or stopped at the terminal facility will affect other moving traffic and must be considered, particularly where turns are involved.

b. The terminal facility must be of sufficient length that a stopped bus does not interfere with moving traffic and a departing bus does not swing beyond the lane adjacent to the terminal facility.

4. General Characteristics

In determining the proper location of terminal facilities, the choice lies between near-side, far-side and mid-block stops. A decision as to the type of terminal facility to be used should be based on engineering judgment of specific factors for each type of terminal facility. The several types of terminal facilities have the following general characteristics.

a. <u>Near-Side Terminal Facility</u>

(1) A minimum of interference is caused at locations where traffic is heavier on the leaving side than on the approach side of the intersection.

(2) Less interference will usually be caused at locations where the crossing street is a one-way street with its direction from right to left.

(3) Passengers generally alight close to a crosswalk.

(4) There is less interference with traffic turning into the bus route street from a side street.

(5) Heavy vehicular right turns can cause conflicts, especially where a vehicle makes a right turn from the left of a stopped bus.

(6) Buses often obscure stop signs, traffic signals or other control devices, as well as pedestrians crossing in front of the bus.

(7) A bus standing at a near-side facility obscures sight distance of a driver entering the bus street from the right.

(8) Where the terminal facility is too short for occasional heavy demand, the overflow will obstruct the traffic lane.

b. <u>Far-Side Terminal Facility</u>

(1) Right turns can be accommodated with less conflict.

(2) A minimum of interference is caused at locations where traffic is heavier on the approach side than on the leaving side of the intersection.

(3) Less interference will usually be caused at locations where the crossing street is a one-way street with its direction from left to right.

(4) Left turning buses approaching a far-side (around the corner) facility commence their left turn from the proper lane. Leaving a near-side facility they would have to cross traffic in the lane to their left.

(5) Stopped buses do not obstruct sight distance to the left for vehicles entering or crossing from a side street.

(6) At a signalized intersection, buses can find a gap to enter the traffic stream without interference, except where there are heavy turning movements into the street with the bus route.

(7) Waiting passengers assemble at less-crowded sections of the sidewalk.

(8) Buses in the terminal facility will not obscure traffic control devices or pedestrian movement at the intersection.

(9) Intersections may be blocked if other vehicles park illegally in the terminal facility, thereby obstructing buses and causing traffic to back up across the intersection.

(10) Facilities on a narrow street or within a moving lane may block traffic on both the street with the bus route and on the cross street.

(11) A bus standing at the far-side facility obscures sight distance, to the right, of a driver entering the bus street from the right.

(12) Where the terminal facility is too short for occasional heavy demand, the overflow will obstruct the cross street.

c. <u>Mid-Block Terminal Facility</u>

(1) Buses cause a minimum of interference with sight distance of both vehicles and pedestrians.

(2) Stops can be located adjacent to major bus passenger generators.

(3) Waiting passengers assemble at less-crowded sections of the sidewalk.

(4) The removal of considerable curb parking is required.

(5) Pedestrian jaywalking is more prevalent. This is hazardous and creates vehicular friction and congestion.

(6) Patrons from cross streets must walk farther.

5. <u>Special Factors to Consider</u>

a. <u>Through Bus Movements</u>

(1) At intersections controlled by signals or Stop or Yield signs, when transit is critical but traffic and parking are not critical, a near-side terminal facility is preferable.

(2) At intersections where heavy left or right turns occur, a far-side terminal facility should be used. If a far-side terminal facility is impractical, the facility should be moved to an adjacent intersection or to a mid-block location in advance of or beyond the intersection.

(3) At intersections where bus routes and heavy traffic movements diverge, a far-side facility can be used to advantage.

(4) At intersections controlled by signals or Stop or Yield signs, when traffic or parking is critical and transit is not critical, a far-side installation is best.

b. <u>Turning Bus Movements</u>

In determining the proper location of terminal facilities with reference to turning bus movements, the problems of bus-vehicle conflict become more pronounced. Sound engineering judgment of specific factors for each type of terminal facility becomes critical.

(1) <u>Right Turn-Curb Space Critical, Traffic Not Critical</u>

a) Establish near-side facility prior to turn.

b) If right turns are an appreciable factor, locate facility some distance prior to intersection, possibly mid-block.

(2) <u>Right Turn-Traffic Critical, Curb Space Not Critical</u>

a) Establish far-side facility after turn.

b) If far-side facility is impractical, establish mid-block before or after turn.

c) If mid-block is impractical, move to another intersection.

(3) <u>Right Turn-Traffic Critical, Curb Space Critical</u>

These are special cases, where experience and engineering judgment must be applied using principles contained herein. Experimentation often will be necessary.

(4) <u>Left Turns</u>

a) Establish far-side facility after bus has turned. This may require an extra-long facility to permit bus to complete turning maneuver.

b) If far-side facility cannot be established, use a mid-block facility after turn. A mid-block facility prior to turn may be feasible if traffic is

sufficiently light and the block long enough to allow the bus to move from the stopped position to the left turn position without traffic conflict.

c) If both (a) and (b) are impractical, establish facility at an adjacent intersection.

c. <u>Mid-Block Facility</u>

Mid -block terminal facilities are recommended under the following conditions:

(1) Where traffic or physical street characteristics prohibit a near- or far-side facility adjacent to an intersection.

(2) Where large factories, commercial establishments or other large bus passenger generators exist, and heavy loading therefore makes the location desirable.

A mid-block facility should be located at the far side of a mid-block pedestrian crosswalk, if one exists, so standing buses will not block a motorist's view of pedestrians in the crosswalk.

d. <u>Bay-Type Facility</u>

Bay-type terminal facilities are encouraged where conditions permit. These involve relocation of the curb so as to flare the street width and allow a bus to pull completely out of the normal traffic and parking lanes. Where used, they should be consistent with this guide.

e. <u>Passenger Interchange Points</u>

If transfer movements between bus routs are heavy, consideration should be given to locating terminal facilities so as to minimize crosswalk movements of transferring passengers. Engineering judgment must be used to determine if these transfer movements are important enough to supercede the other considerations which determine terminal facility locations.

f. <u>One-Way Streets</u>

The Basic principles for terminal facility locations on two-way streets apply also on one-way streets. A special consideration is this: Where the facility turns left, the preceding facility must be located far enough in advance to allow the bus to shift to the left traffic lane. A far-side facility after a left turn from a one-way street is feasible but requires an extra long terminal facility to permit the bus to complete its turning maneuver and to pull in parallel and close to the curb.

g. <u>Adjacent Establishments</u>

When dealing with major passenger generators it will be an advantage to locate the terminal facility so that the crosswalk movements are minimized. However, an engineering investigation is necessary to determine if the

importance of crosswalk movements involved is sufficient to supersede the other considerations for terminal facility locations.

In general, it is desirable to avoid "boxing in" a commercial establishment at a corner by having bus zones on both sides of it. However, if there is one predominant transfer movement at an intersection, it is desirable to locate the terminal facilities so that passenger walking will be minimized. This transfer movement should be of sufficient volume to supersede other considerations.

h. Physical Features Affecting Passengers

For the convenience and protection of bus passengers, consideration should be given to the proximity of shelter and adequate lighting. The existence of traffic control features which provide for passenger safety when boarding and alighting should be considered. Along avenues with planted or grass parkway strips, it may be desirable to add a side- walk slab between the existing sidewalk and the curb where otherwise a bus passenger would have to cross wet grass or mud during inclement weather. This added sidewalk slab has the further advantage of having the bus passenger stand where it is desired to have the terminal facility. Shelter and lighting can be modified to accommodate a facility location determined by other considerations.

It is desirable to avoid placing bus zones at a location where there are a series of raised and lowered curbs, since passengers may misstep and injure themselves when alighting from the bus at a lowered or sloping curb.

i. Paving Width

Where the pavement is substantially wider on one side of the intersection than on the other, the terminal facility may be best located on the side with the wider pavement if traffic volumes are comparable.

j. Frequency of Stops

Generally, each stop adds to the inconvenience of the majority of passengers, decreases the average speed of operation and promotes congestion. Superfluous locations should be avoided.

In practice, spacing may range from one stop per block to stops in alternate blocks where City blocks are shorter. The location of important buildings and traffic generators, and the configuration of side streets leading into the bus route, should be considered in spacing the stops.

Whenever consistent with safety and adequate sight distances, passenger service stops can be combined with mandatory stops required for stop signs, traffic signals, railroad crossings and the like. The number of stops along a given bus route will be decreased and scheduled speed will be increased.

k. Parking Practices

The best engineered facility is of little value if the attendant parking prohibition is not strictly enforced. If the bus must "double Park" because its designated curb space is occupied by parked or stopped vehicles, other traffic may be blocked or its flow made hazardous. Devices and markings that give the facility prominence such as curb painting, tow-away zones and transit emblems may deter motorists from parking in the facility and aid enforcement.

6. Minimum Lengths

The following recommended minimum lengths assume forty (40) foot buses and high-frequency service. For longer or shorter buses, lengths should be adjusted accordingly. In Figures 1, 2 and 3, the length of forty (40) feet beyond the bus stopping point is in excess of the minimum required by bus turning radii, but provides for better maneuvering and smoother reentry into the traffic stream when leaving the facility. The forty (40) foot distance could be reduced if absolutely necessary.

In the case of infrequent service, sound engineering judgment may call for a compromise between desirable facility lengths and demand for parking in the area.

a. Near-Side Facility

A near-side type facility for a single bus should be one hundred and five (105) feet in length as measured from the front of the stopped bus to the front of the preceding parking stall.

b. Far-Side Facility

A far-side type facility for a single bus should be eight (80) feet in length as measured from the rear of the stopped bus to the end of the first parking stall.

A far-side type facility after a right turn for a single bus should be one hundred and forty (140) feet in length as measured from the edge of the lane from which the bus is turning to the end of the first parking stall*

c. Mid-Block Facility

A mid-block facility for a single bus should be one hundred and forty (140) feet in length as measured from the front of the preceding parking stall to the rear of the next parking stall.*

*An additional forty-five (45) feet of length should be provided for each additional bus expected to stop simultaneously at any given terminal facility area. This allows for the length of the extra bus (40 feet) plus five (5) feet between buses.

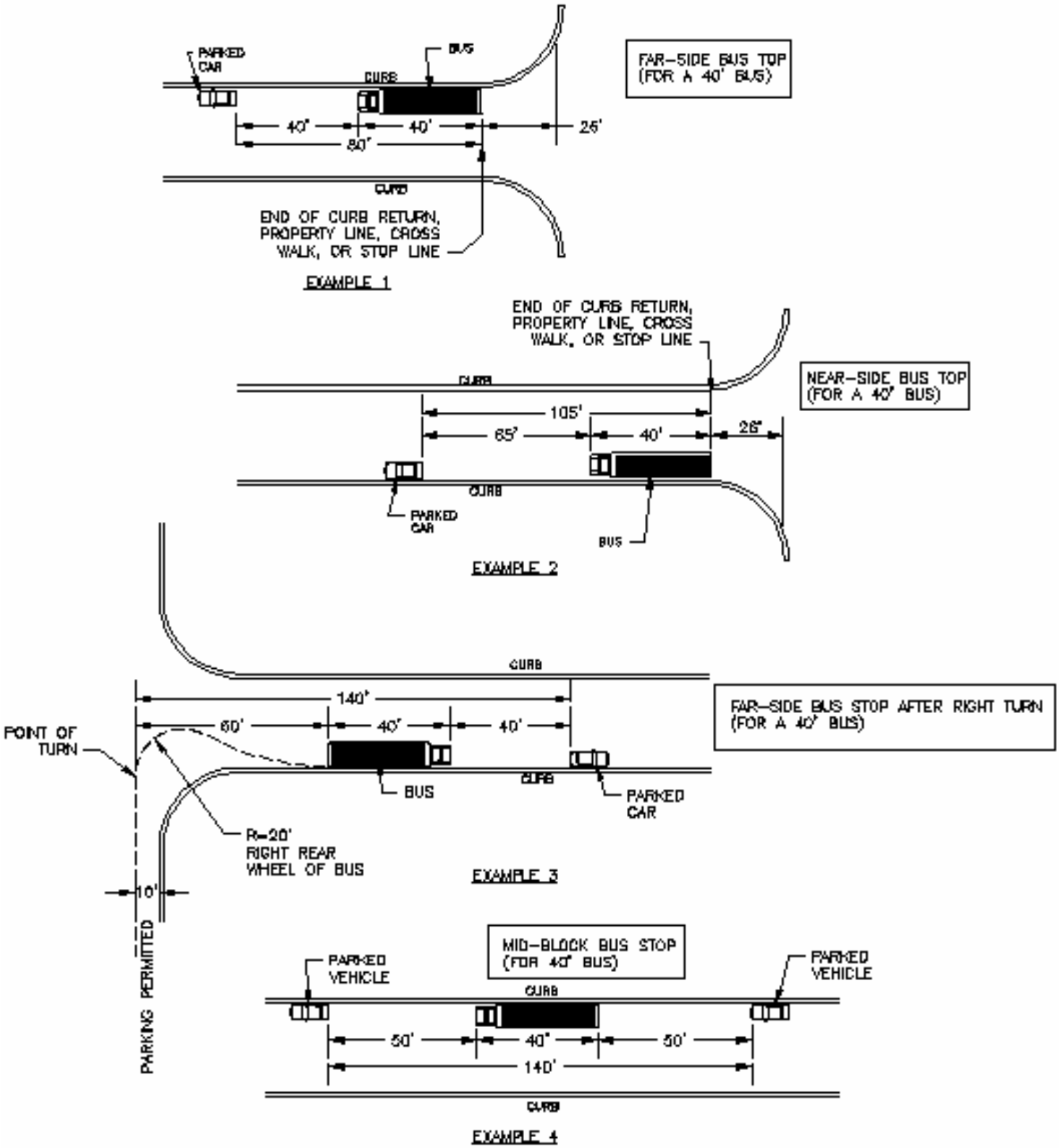
PARKED CAR
BUS
CURB
FAR-SIDE BUS TOP (FOR A 40' BUS)
40'
40'
25'
80'
CURB
END OF CURB RETURN, PROPERTY LINE, CROSS WALK, OR STOP LINE
EXAMPLE 1
END OF CURB RETURN, PROPERTY LINE, CROSS WALK, OR STOP LINE
CURB
NEAR-SIDE BUS TOP (FOR A 40' BUS)
105'
65'
40'
25'
CURB
PARKED CAR
BUS
EXAMPLE 2
CURB
140'
FAR-SIDE BUS STOP AFTER RIGHT TURN (FOR A 40' BUS)
POINT OF TURN
60'
40'
40'
BUS
CURB
PARKED CAR
R=20' RIGHT REAR WHEEL OF BUS
EXAMPLE 3
10'
PARKING PERMITTED
MID-BLOCK BUS STOP (FOR 40' BUS)
PARKED VEHICLE
PARKED VEHICLE
CURB
50'
40'
50'
140'
CURB
EXAMPLE 4

FIGURE 4

IX

SANITATION

IX

SANITATION

TABLE OF CONTENTS

SECTION	PAGE
A. REFUSE COLLECTION	9-1

A. REFUSE COLLECTION

1. Planned Residential Development

Where refuse collection service is to be provided for each dwelling, street plazas will be constructed with sufficient width (minimum for (4) feet) so that residential refuse containers can be placed immediately in front of each residence between the sidewalk and the street.

Where centralized refuse collection service is to be provided by optimally-placed large containers designed to be mechanically handled, the requirements shall be the same as for Planned Commercial and Industrial Development as given below. The developer, tenant or homeowners association shall be responsible for placing refuse in the centralized containers.

2. Planned Commercial and industrial Development

Commercial and industrial establishments will be serviced by containers designed to be mechanically handled.

The Sanitation Division of the Public Services and Facilities Department will assist the developer and his engineer or architect in determining the size and placement of the containers determined by building arrangement and occupancy.

Refuse containers designed to be mechanically handled shall be placed on a permanent concrete pad. The concrete pad shall have minimum thickness of four (4) inches and be a minimum of eight (8) feet square.

Sufficient clearance around the pad shall be provided for refuse trucks so that containers may be safely services. Containers shall not be placed where electrical wires, guy wires, trees, shrubs or vehicles may create unsafe working conditions. Clearance must be a minimum of eighteen (18) feet in height. Ample maneuvering room shall be provided around any pad installation so that container may be serviced without danger of damage to property of others or to service equipment. If pad is placed in a parking area, design shall be such as to prohibit parking in the immediate vicinity of the container.