City of Wilmington, North Carolina
Traffic Engineering

Specifications
For
Installation of
Street Name Signs,
Traffic Control Signs
and
Signs Hardware

January 18, 2022

Revision History

- December 19, 2014 Specifications Developed
- July 21, 2016 Added specifications for Custom Signs, Posts, and Hardware
- November 17, 2016 Added Table of Contents, specifications for Accessible Parking Spaces Signs, and specifications for Fire lane signs. Reformatted specifications.
- July 27, 2018 Section 1 – Signs, A. General Requirements. Added new color standards requirements. Section 1 – Signs, D. Street Name Signs (in general). Clarified paragraph 3 by adding paragraph 5 about use of PRIVATE on street name signs.
- August 30, 2018 Section 1 – Signs, A. General Requirements. Revised paragraph 15. Deleted Figure 5.2
- October 6, 2020. General revisions. Removed U-Channel from post type, added Square Post. Added Flat Sign Blanks for street name signs. Revised Figure numbers and added details.
- January 18, 2022. Section 1 – Signs, A. General Requirements. Revised paragraph 11 to clarify inspections of signs and pavement markings.

Table of Contents

Section 1 – Signs

A. General Requirements
B. Accessible Parking Spaces Signs
C. Miscellaneous Signs
   1. Fire Lane Signs
   2. Future Road Connection When Property Develops Sign
D. Street Name Signs (in general)
E. Ground (Post) Mounted Street Name Signs
F. Overhead Street Name Signs
G. Traffic Control Signs
H. Custom Signs, Posts, and Hardware

Section 2 – Posts and Hardware

A. General
B. Octagonal (NEX) Posts
C. Square Posts and Anchors
D. Hardware
E. Sign Placement Location

Details and Figures

Sheet No. Figure No. and Name

TE1-01 ***General Street Name and Traffic Control Signage Information***
Figure 1.1 Historic District Street Name Sign with Topper on NEX Post
Figure 1.2 Speed Limit and Area Wide Sign at Neighborhood Entrance
Figure 1.3 Speed Limit and Area Wide Sign Detail
Figure 1.4 Traffic Control Sign for a Private Driveway Installed in the Public Right-of-Way

TE1-02 ***General Street Name and Traffic Control Signage Information***
Figure 2.1 Improperly Installed Traffic Control Signs for a Private Driveway Installed in the Public Right-of-Way
Figure 2.2 Standard Street Name Signs Installed Above a Stop Sign (Bottom Sign Parallel to Stop Sign)
Figure 2.3 Standard Street Name Signs Installed Above a Yield or Stop Sign (Bottom Sign Perpendicular to Yield or Stop Sign)

TE1-03 ***General Street Name and Traffic Control Signage Information***
Figure 3.1 Street Name Sign for a Private Street
Figure 3.2 Street Name Signs with Direction Arrows
Figure 3.3 Assembly of Sign Films

TE2-01 ***Ground Mounted Street Name Sign Design***
Figure 4.1 Street Name Signs Details
Figure 4.2 Ground (Post) Mounted Street Name Signs Details
Figure 4.3 Ground Mounted Street Name Signs Details (Use on Multi-Lane where speed limit is greater than 40 mph)

TE2-02 ***Overhead Mounted Street Name Sign Design***
Figure 4.5 Overhead Street Name Sign No Border Detail

TE3-01 ***Square Post Street Name Sign Detail***
Figure 5.1 Square Post Street Name Sign Detail

TE3-02 ***Square Post Street Name Sign Attachment Exploded View***
Figure 5.2 Square Post Street Name Sign Exploded View

TE3-03 ***Square Post Traffic Control Signs Attachment***
Figure 5.3 Square Post Traffic Control Signs Attachment

TE4-01 ***NEX Post Street Name Sign and Traffic Control Signs Attachment***
Figure 6.1 NEX Post Street Name Signs and Traffic Control Signs Mounting Details
Figure 6.2 NEX Post Street Name Signs Mounting Detail
Figure 6.3 NEX Post Mounting Detail
Figure 6.4 Typical Bolting Location for Traffic Control Signs

TE5-01 ***Square and NEX Posts Ground Installation Details***
Figure 6.5 Square Tube Post Installation Detail
Figure 6.6 NEX Post Installation Details

TE6-01 ***Locations for Installation of Posts for Street Name Signs at Street Intersections***
Figure 7.1 Street Name Signs for Streets That Intersect NCDOT Roads
Figure 7.2 Street Name Signs for Streets at Intersection of Non NCDOT Road

TE6-02 ***Horizontal and Vertical Clearances for Installation of Signs and Sign Posts***
Figure 7.3 Traffic Control Sign at Edge of Pavement – No Curb
Figure 7.4 Traffic Control Sign at Vertical Curb
Figure 7.5 Traffic Control Sign at Slope Face Curb
Figure 7.6 Traffic Control Sign or Street Name Sign at Pedestrian Area

TE6-03 ***Horizontal and Vertical Clearances for Installation of Signs and Sign Posts***
Figure 7.7 Street Name Sign Installed Above Stop Sign
Figure 7.8 Street Name Sign Installed Without Stop Sign at Edge of Pavement
Figure 7.9 Street Name Sign Installed Without Stop Sign at Vertical Curb
Figure 7.10 Street Name Sign Installed Without Stop Sign at Slope Face Curb

TE6-04 ***Horizontal and Vertical Clearances for Installation of Signs and Sign Posts***
Figure 7.11 Traffic Control Sign with Supplemental Plaque Mounting Height
Figure 7.12 Traffic Control Sign or Street Name Sign Installed in Concrete
Figure 7.13 Traffic Control Sign or Street Name Sign at Pedestrian Area

TE7-01 ***Accessible Parking Signs***
Figure A1.1 R7-8a and R7-8d Signage
Figure A1.2 R7-8e Signage
Figure A1.3 R7-8P Signage

TE7-02 ***Signage Height***
Figure A2.1 Signage Height

TE7-03 ***Accessible Parking Signage Locations Sheet 1 of 3***
Figure A3.1 Head to Head Parking Spaces
Figure A3.2 Accessible Route Between Head to Head Parking Spaces
Figure A3.3 Landscape Median Between Head to Head Parking Spaces

TE7-04 ***Accessible Parking Signage Locations Sheet 2 of 3***
Figure A4.1 Concrete Sidewalk and Landscape Median Between Head to Head Parking Spaces
Figure A4.2 Parallel Parking Accessible Spaces

TE7-05 ***Accessible Parking Signage Locations Sheet 3 of 3***
Figure A5.1 Concrete Sidewalk Between Building and Parking Spaces
Figure A5.2 Concrete Sidewalk and Landscaping Between Building and Parking Spaces

TE8-01 ***Fire Lane Signage***
Figure 8.1 Fire Lane Signs

TE8-02 ***Installation and Sign Details for Future Road Connection When Property Develops Sign***
Figure 8.2 Sign Detail, Installation Detail, Enlarged Side View Detail

Section 1 - Signs

A. General Requirements

1. All signs **shall** meet the requirements of the latest editions and any supplements of the following:
    - "*The Manual on Uniform Traffic Control Devices for Streets and Highways*" (MUTCD) latest version and the "*Standard Highway Signs including Pavement Markings and Standard Alphabets*" latest version and supplements both of which are published by the U.S. Department of Transportation Federal Highway Administration and "*Color Specifications for Retroreflective Sign and Pavement Markings Materials"* which is an appendix to subpart F of Part 655 of Title 23 of the Code of Federal Regulations.
      All sign shapes, lettering, colors, and fonts, and installation height shall adhere to the latest edition of these standards that are in effect at the time of construction.
    - North Carolina Department of Transportation (NCDOT) 2018"*Roadway Standard Drawings*" or latest edition.
    - North Carolina Depart of Transportation *"North Carolina Supplement to the Manual on Uniform Traffic Control Devices"* (NCMUTCD) 2009 or latest edition.
    - American Association of State Highway and Transportation Officials (AASHTO) "*Standard Specifications for Transportation Materials and Methods of Sampling and Testing and AASHTO Provisional Standard*" latest edition.
      All signs, posts, and hardware shall also meet the latest version of the applicable ASTM specifications.
    - City of Wilmington Traffic Engineering standards in effect at the time of construction.
    - Colors shall be manufactured to comply with the FHWA color tolerance charts (FED-STD-595C) as per FHWA Docket Number FHWA-2007-28977, RIN 2125-AF22, December 16, 2009 and SAE-AMS-STD-595, "Colors Used in Government Procurement" which supersedes FED-STD-595C.

2. Florescent Yellow Green shall be used on signs, in place of Yellow, when listed as an optional color in the MUTCD. Generally, the font will be FHWA series fonts (Highway Gothic). Street name signs to use Series B or Series C fonts. Other font types require prior City Signs and Markings Engineering Manager approval.

3. City street name signs and traffic control signs shall not be mounted as additional signs on NCDOT sign posts unless authorized by the City Signs and Marking Engineering Manager and by NCDOT.

4. Signs shall not be installed within a 3' (feet) radii of a fire hydrant.

5. The contractor or developer is responsible for the initial cost of and the installation cost of traffic control and street name signs.

6. All signs shall be fabricated with new materials. Used or reconditioned materials will not be allowed.

7. Signs, posts, and hardware shall be free from damage and clean at time of installation.

8. The contractor or developer should contact the North Carolina 811 for utility locates prior to installation of any ground mounted signs.

9. ***All signs shall be constructed using sheeting material, including letters that are <u>High Intensity Prismatic reflective sheeting Type IV or better</u>*** **meeting ASTM D4956 and shall have a minimum 10 (Ten) year service life.**

10. SPECIAL DESIGNATION signs by location and type shall adhere to City of Wilmington signage plan (i.e. downtown, historic, scenic by-way, parks, riverfront, parking, etc.) and all associated policies (Figure 1.1). The Traffic control signs in this area may need to have back of signs covered by black film or spray painted flat black.

11. A signage and pavement marking plan shall be submitted for approval to the City Signs and Marking Engineering Manager showing all proposed traffic control signs, street name signs, and related pavement markings locations and types. Prior to installation of signs and pavement markings, the contractor or developer shall notify the Signs and Marking Engineering Manager for preliminary inspection. After permanent installation of signs and pavement markings, the contractor or developer shall notify the Signs and Marking Engineering Manager for final inspection. The contractor or developer will be notified of any corrections to be made.

12. It shall be the responsibility of the contractor or developer of the property to erect all proposed traffic control signs and official street name signs within the subdivision or development in accordance to MUTCD and City of Wilmington standards. Street names, street types, and block numbers must conform to the latest adopted addition of the "Addressing Standards & Procedures Manual for New Hanover County & the City of Wilmington". Signs must be installed in the public right-of-way if the city is going to assume the responsibility of maintenance of the signs.

13. It shall be the responsibility of the contractor or developer of the property to ensure proper maintenance of all traffic control signs and street names signs within the subdivision or development until the street(s) is (are) officially accepted by the City of Wilmington. Proper maintenance includes but is not limited to the cleaning, visibility, repair or replacement of damage signs, and replacement of missing signs. All traffic control and street name signs should also maintain MUTCD minimum reflectivity requirements and shall be replaced when they fall below the minimum reflectivity requirements. Signs should be maintained to be free of weeds, trees, shrubbery, and any other item(s) that may obscure or restrict the visibility of the sign.

14. All subdivisions shall post a speed limit sign at each entrance. Where a subdivision speed has been set to 25 mph, a 25 mph speed limit sign along with the "AREA WIDE" plaque may be used (Figure 1.2, Figure 1.3).

15. Where streets have no outlet, the City may require a NO OUTLET sign to be installed. Where a street dead ends, End of Road markers are required to be installed.

16. Where there are marked bicycle lanes, they should be signed per MUTCD chapter 9. "NO PARKING BIKE LANE" (R7-9) signs may be required along bicycle lanes.

17. Multi-use trails, Pedestrian crossings, Roundabouts, and Mini-Roundabouts should also be signed per the MUTCD and FHWA standards.

18. Signs shall not be installed in the existing or proposed right-of-way when the signs being installed are intended to function as traffic control for a private driveway (Figure 1.4, Figure 2.1). Signs for private driveways shall not be installed on posts that will be or are owned by the city.

19. Removal of signs:
    - *Permanent Removal*: When signs are removed and will not need to be reinstalled, the contractor or developer shall deliver the signs to the City Traffic Engineering Division at 206 Operation Center Drive.
    - *Temporary Removal*: When signs are removed and will be reinstalled at their previous locations, the contractor or developer shall store the signs to keep them free from damage and from being lost. Any sign that is lost or damaged shall be replaced at the contractor or developer expense.

20. Trees or landscaping shall not be planted where they will obscure signs. The City and NCDOT sight distances requirements must be observed.

B. Accessible Parking Spaces Signs

1. Accessible parking spaces and signage of accessible parking spaces shall meet the requirements of the U.S. Department of Justice revised regulation for Titles II and III of the Americans with Disabilities Act of 1990 which was published in the Federal Register and called *2010 ADA Standards for Accessible Design "2010 Standards"* and any amendments or revisions to these requirements.

2. When parking facilities are restriped, accessible parking shall comply with the *2010 Standards* which includes, but not limited to accessible parking signage. (U.S. Department of Justice, Civil Rights Division, Disability Rights Section *ADA Compliance Brief: Restriping Parking Spaces* dated December 2015)

3. **Accessible parking spaces are not legally "accessible" unless the appropriate signage is posted with each space and have the required accessible aisle. There must be accessibility parking signs for and in front of each accessible parking space.** Accessibly parking signs should be centered on the width of the accessible parking space exclusive of the accessible aisle. The signs for each accessible parking spaces shall be composed of the following assembly:
    - The top sign shall be the R7-8a *Reserved Parking* sign (Figure A1.1), 12" wide x 18" high without arrow(s). T**he R7-8a sign when a single arrow or when a double arrow is included as a part of, or has the arrow(s) as a separate component is not allowed to be used. (NCMUTCD Section 2B.39)**
    - The next sign down shall be the North Carolina R7-8d *Maximum Penalty $250* sign, (Figure A1.1), 12" wide x 9" high. This sign shall include the following "*G.S. 20-37.6"*. It is permissible to combine *Reserve Parking* and the *Maximum Penalty $250* signs into one sign who size is 12" wide x 26" high, North Carolina R7-8e sign (Figure A1.2).

- Van accessible parking spaces shall include the ***VAN ACCESSIBLE*** **R-7-8P sign, 18" wide x 9" high** (Figure A1.3) (2009 Edition MUTCD Table 2B.1, Sheet 2), in addition to the above required signs. The van accessible sign shall be below the Reserved Parking sign (2009 Edition MUTCD Section 2B.47)

4. When the words *accessible parking signs* are used, it is referring to the R7-8a and R7-8d signs where used together or the R7-8e sign. It is also including the R7-8P sign at van accessible parking spaces when used either with the R7-8a and R7-8d signs or with the R7-8e sign.

5. Accessible parking signs shall be installed as not to obstruct the clear width of accessible aisles, accessible routes, areas of pedestrian movements, or sidewalks. Accessible parking signs can be mounted on both sides of the same post where accessible parking spaces are head to head to each other and the accessible parking spaces are not separated by an accessible route, sidewalk, or area of pedestrian movement (Figure A3.1).

6. Placement of accessible parking signs

Vertical Height
Accessible parking signs height from the lowest point of the bottom sign to the finished pavement surface or the top of the adjacent sidewalk (Figure A2.1) shall meet the following:

- 60 inches minimum where accessible parking signs are installed on a building face (Figure A5.1).
- 60 inches minimum where accessible parking signs are **not** located in an accessible aisle or an accessible route (Figure A3.1), **not** within an area of pedestrian movement (Figure A3.3), or **not** next to a sidewalk.
- 60 inches minimum where accessible parking signs are installed in a landscaped median or area (Figure A3.3).
- 84 inches minimum where accessible parking signs are located in an accessible aisle or accessible route (Figure A3.2) (Figure A4.2).
- 84 inches minimum where accessible parking signs are located within an area of pedestrian movement (Figure A4.1).
- 84 inches minimum where accessible parking signs are located next to a sidewalk (Figure A4.1) (Figure A5.2)

Horizontal Distance
Horizontal distance of accessible parking signs shall be of the following:

- Accessible parking signs shall be in front of accessible parking spaces as close as possible. Accessible parking signs shall be located at a maximum distance of 5 feet in front of accessible parking spaces from the face of the curb or from edge of pavement if no curb exists to the accessible parking signs.

- Where accessible parking signs are located less than 3 feet from the face of curb, wheel stops shall be installed two and half feet from the face of curb (Figure A3.3) in order to protect the signs and sign's post from damage by vehicles.

- Where accessible parking signs are located and no curb exists, wheel stops shall be installed two and half feet in from the edge of the accessible parking space or edge of pavement in a manner that would protect the accessible parking signs and sign's post from being damaged by vehicles.

- Where a sidewalk is located in front of the accessible parking space (Figure A5.2), install the accessible parking signs behind the sidewalk up to a maximum distance of 10 feet from the face of the curb, or the turned down edge of the sidewalk adjacent to the accessible parking space.

- Where accessible parking signs are installed on a building face, the maximum distance is 10 feet from the face of curb to the accessible parking signs. This would allow an accessible route, such as a sidewalk, to be in front of the accessible parking space and provide low level landscaping next to the building.

7. Where accessible parking spaces head in to each other, a single post with accessible parking signs mounted on both side of the post is allowed (Figure A3.1) unless the accessible parking spaces are separated by an accessible route, a sidewalk, a median or some other type of barrier (Figure A3.2).

8. Parallel parking accessible spaces shall have accessible parking signs at each end of the accessible parking space. Accessible parking signs shall be located out the outer edge of the accessible aisle and turned at a 45-degree angle toward the accessible parking space (Figure A4.2). Accessible parking signs shall not be installed in the accessible aisle, or within the area where the vehicle door is expected.

9. There shall not be any landscaping or trees installed that will obscure visibility of the accessible parking signs. Landscaping or trees that obscure the visibility of accessible parking signs shall be trimmed or removed.

10. It shall be the responsibility of the business or developer of the property to ensure proper maintenance of accessible parking signs. Proper maintenance includes but is not limited to the cleaning, visibility, repair or replacement of damage signs, and replacement of missing signs.

11. Accessible parking signs and posts shall be manufactured as followed:
    - Flat sign blanks that are from 0.080 gauge 6063-T6 aluminum alloy or 0.080 gauge 5052-H38 aluminum alloy. Flat sign blanks shall meet ASTM B209 standard specification for aluminum and aluminum-alloy sheet and plate. Blanks shall be chemically treated to meet ASTM B-499 specification.
    - All signs shall be constructed using sheeting material, including letters that are <u>High Intensity Prismatic reflective sheeting Type IV or better</u> meeting ASTM D4956 and shall have a minimum 10 (Ten) year service life.
    - Where signs are not mounted to a building, they shall be installed on galvanized U-Channel posts or pressure treated wood posts. Wood posts shall be nominal 4 inches by 4 inches. Wood posts shall be minimally pressure treated for contact with ground meeting American Wood Protection Association (AWPA) UC4A standard. Fasteners for signs attached to pressure treated wood posts shall be hot-dipped galvanized in accordance with ASTM A-153 or shall be stainless steel 304 or 316. U-Channel posts shall be minimal 2 lbs./ft. Fasteners for signs attached to galvanized U-channels shall be hot-dipped galvanized or aluminum fasteners.

C. Miscellaneous Signs

1. Fire Lane Signs

a) Fire lanes and fire apparatus access roads are designated by the city fire marshal. Where required by the city fire marshal to be signed, they shall be signed as below unless instructed by otherwise by the city fire marshal.

b) Signs shall be 12 inches wide and 18 inches high and have in red letters the following: NO PARKING – FIRE LANE (Figure 8.1). The sign shall have a white reflective background. Signs shall be constructed using sheeting material, including letters that are *High Intensity Prismatic reflective sheeting Type IV or better* meeting ASTM D4956 and shall have a minimum 10 (Ten) year service life.

c) Fire lane signs shall be constructed of materials that is specified in Section 1, subsection G, Traffic Control Signs. Posts shall be constructed of material that is specified Section 2, Posts and Hardware.

d) Fire lane signs shall be placed at intervals not to exceed 50 feet or as designated by city fire marshal. Fire lane signs shall face oncoming traffic and be on the side of road that is the fire lane. Fire lane signs shall be place in relation to the road or curb as specified in Section 2, subsection E, Sign Placement Location.

2. Future Road Connection When Property Develops Sign

a) *FUTURE ROAD CONNECTION WHEN PROPERTY DEVELOPS* sign shall be install at road stub outs or as directed by the Subdivision Review Board or Technical Review Committee.

b) Sign blanks shall meet the same requirements as Section 1, subsection G, Traffic Control Signs.

c) See Detail TE8-02 for details on sign size, legend, installation, and attachment.

d) Sign shall be placed centered on the street stub out with a OM4-1 object marker below the sign on each post. Also install OM4-1 object markers placed 6 feet from each end of the sign. Sign and object markers shall be located 6 feet from end of pavement.

D. Street Name Signs (in general)

1. Street name signs construction shall be as follows unless prior approval in writing in obtained from the City of Wilmington Signs and Marking Engineering Manager for alternate construction.

2. Street name signs blanks shall be as follows:

    a. **Square post** ground mounted street name signs shall be flat aluminum alloy street name sign blanks with radius corners and with a mill finish. Street name sign blanks shall be

pre-punched with holes as shown on Figure 5.1. Street name sign blanks shall be assembled per Figure 5.1 and 5.2

b. **NEX post** ground mounted street name signs fabricated with extruded flange-reinforced-edge aluminum alloy street name sign blanks 9" (nine inches) in height with a mil finish. Extruded blade signs are to be used in areas that have sign toppers and have a slot for the sign toppers. NEX post ground mounted street name signs blanks shall not be punched with holes or have radius corners.

c. Overhead street name signs shall be fabricated with 0.080-inch aluminum alloy flat sign blanks 18" (eighteen inches) in height having radius corners and a mil finish. For mast-arm type traffic signal supports systems and other overhead support systems refer to the traffic signal system design plans for maximum sign length.

d. Sign blanks shall be 0.080 gauge 6063-T6 aluminum alloy or 0.080 gauge 5052-H38 aluminum alloy. Extruded sign blanks shall meet ASTM B221 standard specification for aluminum and aluminum-alloy extruded bars, rods, wire, profiles, and tubes. Flat sign blanks shall meet ASTM B209 standard specification for aluminum and aluminum-alloy sheet and plate. Blanks shall be chemically treated to meet ASTM B-499 specification. Sign blank length will be dictated by the number of letters in the name.

3. Colors scheme shall be white letters on a green background without a border (Figure 2.2, Figure 2.3). Generally, in the downtown and historic areas or as designated in the City of Wilmington signage plan, the street name sign will have white lettering with a blue background and contain a topper (Figure 1.1). Contact City of Wilmington Signs and Marking Engineering Manager for details on the topper. Fonts for street name signs are FHWA series C (preferred) or B. All street name signs shall be mounted horizontally. Street name signs shall have the white (lettering) sheeting applied first to the sign blanks. Then the green or blue sheeting with the lettering cut out shall be applied on top of the white sheeting. This encapsulates the white lettering (Figure 3.3).

4. Lettering shall be composed a combination of an initial upper-case letter followed by lower-case letters. When the street name is composed of more than one word each word shall have the initial letter as upper-case. Street type and street direction shall have initial upper-case letter followed by lower-case letter(s). Block number of streets shall be installed after street name and below type of street (Figure 2.2, Figure 2.3, Figure 4.1, and Figure 4.2). Street direction, where applicable, shall be installed in front of street name with upper-case letter and in line with the street type lettering. Flat blade street name signs shall provide the information on one face of each blade (Figure 5.1, Figure 5.2). Each extruded blade street name sign shall provide the information on both faces of the sign. At an intersection where there are 2 or more streets running in the same general direction with different street names, arrows may be required on the street name signs to indicate which street the street name sign is referencing (Figure 3.2).

5. Streets that are not or that will not be dedicated to the City at time of completion, or driveways that are named access easements; the street name sign shall be marked as PRIVATE. When street names signs are to be marked as PRIVATE, the word PRIVATE shall be installed vertically on both faces of the sign at the end of the sign closest to the cross street; before the street name or after the block number in black lettering within a yellow background (Figure

3.1, Figure 4.1). The width of the yellow background shall be 1 (one) inch in width; lettering shall be 3/4 (three quarters) inch in height FHWA series B or C.

E. Ground (Post) Mounted Street Name Signs

1. Street name signs shall be erected at all street intersections. Where there is an intersection of two streets and one of the streets is a multi-lane road, the intersection shall be double posted (a street name sign on each side of the multi-lane road placed diagonally). If at a "T" intersection where one of the streets is a multi-lane road, the sign on the far side should have a directional arrow on the street name sign pointing to the street.

   A multi-lane street is a street having 2 (two) or more ***through*** lanes flowing in the same direction for traffic in both direction (exclusive of right turn lanes or two way left turn center turn lane) (Figure 7.1, Figure 7.2). Street name signs shall not be located on NCDOT stop signs posts.

2. Multi-lane streets where the posted speed limits are 40 mph or lower; street name sign blanks 9" (inches) in height shall be used. Multi-lane streets where the posted speed limits are above 40 mph; street name sign blanks 12" (inches) in height shall be used. Minimum sign length is 18" (inches) increasing in 6" (inches) increments to a maximum length of 54" (inches). Actual sign length will be dictated by the number of letters in the name.

3. Square post sign blanks are .080 in thickness.

4. NEX posts sign blanks shall have flanges that are twenty-five hundredths (0.250") inches thick, center that is ninety-one hundredths (0.091") inches thick. Actual sign length will be dictated by the number of letters in the name. Where signs are direct mounted to NEX post, use hot dipped galvanized bolt and vandal proof nut. Install nylon washer against sign face. See Figure 6.3 and Figure 6.4.

5. Lettering sizes shall be as follows:

   For 9" (inches) sign blanks:

   Street name: Upper-case letter is 6" (inches) high with Lower-case letters of 4.5" (inches) high.
   Street type and street direction: Upper-case letter of 3" (inches) high with Lower-case letter(s) of 2.25" (inches) high.
   Block number: 3" (inches) high numerals.
   Private: 1" (inch) high letters placed vertically.
   Minimum Distance from edge of sign to edge of letters: 2" to beginning of street name, 3" to beginning of street name where street name is preceded by PRIVATE, and 2" from the end where the block number is located (Figure 4.2)

   For 12" (inches) sign blanks:

   Street name: Upper-case letter is 8" (inches) high with Lower-case letters of 6" (inches) high.
   Street type and street direction: Upper-case letter of 4" (inches) high with Lower-case letter(s) of 3" (inches) high.
   Block number: 4" (inches) high numerals.
   Private: 1" (inch) high letters placed vertically.

Minimum Distance from edge of sign to edge of letters: 2" to beginning of street name, 3" to beginning of street name where street name is preceded by PRIVATE, and 2" from the end where the block number is located (Figure 4.3)

F. Overhead Street Name Signs

1. Overhead Street Name Signs shall be installed where there are traffic signal mast arms or span wire and as directed by the City Traffic Engineer or his designee.

2. Street name signs blanks are 18" (inches) in height. See Figure 4.5.

3. Lettering sizes shall be as follows:
   Street name: Upper-case letter is 12" (inches) high with Lower-case letters of 9" (inches) high.
   Street type and street direction: Upper-case letter of 6" (inches) high with Lower-case letter(s) of 3" (inches) high.
   Block number: 6" (inches) high numerals.
   Minimum Distance from edge of sign to edge of letters: 2" to beginning of street name and 1" from the end where the block number is located.

G. Traffic Control Signs

1. All traffic control signs including multi-use paths shall be fabricated to sizes and shapes per MUTCD using flat aluminum alloy sign blanks. Traffic control signs shall be fabricated as follows: The sign blanks shall be 0.080 gauge 6063-T6 aluminum alloy or 0.080 gauge 5052-H38 aluminum alloy. Flat sign blanks shall meet ASTM B209 standard specification for aluminum and aluminum-alloy sheet and plate. Blanks shall be chemically treated to meet ASTM B-499 specification.

2. STOP signs (R1-1) shall be a minimum of 30"x30". YIELD signs (R1-2) shall be a minimum of 36"x36"x36". Speed limit signs (R2-1) shall be a minimum of 24"x30" and AREA WIDE signs (if used) shall be 24"x9" (Figure 1.3).

H. Custom Posts, Signs, and Hardware

1. The City of Wilmington, at its option, may approve custom posts, signs, and hardware for use in subdivisions or developments. The entity requesting custom posts, signs and hardware shall complete and submit a City of Wilmington ***Non-Standard Traffic Sign Hardware & Material Agreement*** for execution by the City. The subdivision or development shall have a Homeowner Association (HOA) that has been properly incorporated and recorded in the North Carolina Secretary of State office. A copy of HOA documents shall be provided if requested. The developer or HOA shall submit to the City of Wilmington Signs and Marking Engineering Manager contact information including emergency contact information of developer or HOA and shall keep said contact information current. The contractor shall send submittals for approval to the City of Wilmington Signs and Markings Engineering Manager.

2. The contractor, developer, or HOA shall submit for approval for use of custom posts, signs, and hardware. Submittal shall include information and specifications on the posts, signs and hardware that is to be used. A signage and pavement marking plan is still required to be summited for approval. All posts and hardware shall be able to readily accept City of Wilmington standard street name and traffic signs.

3. The City of Wilmington will not be responsible for maintenance or replacement of custom posts, signs, and hardware. The developer or HOA shall properly maintain and replace custom posts, signs, and hardware to the City of Wilmington standards and specifications within 1 (one) week of notification or discovery of maintenance or replacement issues. The developer or HOA shall maintain or replace the high priority signs of STOP, YIELD, and DO NOT ENTER as soon as possible as these signs contribute more to traffic safety than other signs. The replacement of the high priority signs may include the installation of temporary non-custom signs on temporary non-custom posts till the custom posts and signs can be ordered, received, and installed.

4. Should the developer or HOA fail to properly maintain or replace custom posts, signs, and hardware within a reasonable period of time, the City of Wilmington at its option may install City of Wilmington standard posts, signs, and hardware. The developer or HOA will be liable for costs associated with the removal of custom posts, signs, and hardware.

5. All custom posts, signs, and hardware and the installation of custom posts, signs, and hardware is still required to meet the requirement of the latest editions of the MUTCD, the FHWA "Standard Highway Signs and Markings" book and City Traffic Engineering standards including other appropriate sections of this document in effect at the time of construction.

6. It is suggested that the developer or HOA keep on file a copy of the approved signs and markings plan, copy of manufacturer literature and contact information to aid in prompt replacement and maintenance of custom posts, signs, and hardware.

Section 2 - Posts and Hardware

A. General

1. All signs posts, street name signs posts as well as traffic control signs posts, shall be installed such that the posts, without regards to type of post, be able to breakaway to meet FHWA and NCHRP 350 requirements.

2. Sign posts anchors installed in dirt shall be buried a minimum of 30” (inches). The dirt shall be tamped to ensure compaction to prevent movement of the post. Alternately #78 washed stone can be used to fill in holes around posts. Sign posts installed in concrete or brick shall utilize a base cast in concrete 24" x 12" (inches) diameter.

B. Octagonal (NEX) Posts

1. Generally, in the downtown and historic areas or as designated in the City of Wilmington signage plan decorative octagonal (NEX) sign posts should be used. These posts and all hardware shall be powder coated glossy black. Contact the city signs and marking engineer for locations where this apply. Galvanized NEX post system may be substituted with approval from the City Signs and Markings Engineering Manager.

2. Octagonal sign posts shall consist of the NEX sign support system, 2.0"x2.0” octagonal outside dimension. Posts shall be manufactured from 1.89 lbs./ft, 14 gauge (0.074 min., 0.083 nominal) galvanized steel tube. Posts shall meet ASTM A1011 standard specifications for Hot-Rolled Carbon Sheet Steel, structural quality, and ASTM A787 standard specifications for Electric-Resistance-Welded Metallic-coated Carbon Steel Mechanical Tubing. Hot dipping galvanizing shall conform to ASTM A653 G90. All welds are to be zinc coated.

3. Hardware shall include vandal-proof caps and crosses with vandal-proof recessed head attachment bolts and set screws. See Figure 6.1, Figure 6.2, Figure 6.3, and Figure 6.4.

4. Anchors shall be a 2.25” (inches) square aluminum anchor which allows the post to slide in. The post shall be installed a minimum of 6” (inches) into the anchor or per manufacture’s recommendation. The post shall be secured to the anchor by a NEX wedge. Anchors shall utilize an anti-spin device, 6" (inches) minimum in length or the NEX winged square anchor can be used. The anchors shall be hot-dipped galvanized as above. Anchors installed in concrete shall be buried a minimum of 24” (inches) into concrete and anchored to the concrete with a short section of U-channel or thru bolts. Anchors should have a 1/4” (one-quarter inch) projection above ground (Figure 6.6).

C. Square Posts and Anchors

1. Square posts and anchors shall be manufactured of galvanized new billet steel conforming to ASTM A-499, Grade 60 and galvanized to ASTM A-123 and complying with AASHTO M-120. Galvanizing shall occur after posts and anchor has been pre-punched. Square posts shall be 12’ (feet) in length; and square anchors shall be 3’ (feet) in length.

2. Square posts and anchors shall have 7/16” (inch) diameter holes at 1” (inch) on center starting at 1” (inch) from the top. Holes shall be pre-punched out on all 4 sides, and not field drilled.

3. Square posts shall be 14 ga. (gauge) and have outside dimension of 2” (inches) by 2” (inches) with a weight of 1.99 lbs./ft. Square post anchors shall be 12 ga. (gauge) and have outside dimensions or 2 ¼” (inches) by 2 ¼” (inches) with a weight of 2.77 lbs./ft.

4. Square post anchors shall have a 5/16” (inches) by 3” (inches) long bolt with 2 nuts installed one of the bottom holes. Bolt should not go all the way thru the anchor post but have a nut on the interior of the anchor post and a nut on the outside of the anchor post. Wrap anchor post on the bottom and all sides with duct tape except for the last 2 holes on all sides at the top. Pour one 50 pound bag of Quikrete concrete mix into bottom of hole and add 2 quarts of water and mix. Backfill with dirt and tamp. See Figure 6.5.

5. Connect sign post to anchor post with one 3/8” (inch) aluminum shell/steel pin drive rivet or 5/16” (inch) corner bolt with 5/16” flanged nut.

D. Hardware

1. Hardware shall include vandal-proof caps and crosses with vandal-proof recessed head attachment bolts and set screws.

2. Aluminum Hardware shall meet the following:
   ASTM F468 Nonferrous bolts, Hex Cap Screws and Studs for General Use
   ASTM F467 Nonferrous Nuts for General Use
   Bolts and screws – Aluminum alloy 2024-T4 or 6061-T6 ASTM B211
   Nuts-hex – Aluminum alloy 6061-T6 or 6262-T9 ASTM B211
   Nuts-lock - Aluminum alloy 2017-T4 or 6061-T6 ASTM B211
   Washers-flat – Aluminum alloy Clad 2024-T4 or 6061-T6 ASTM B209
   Washers-lock – Aluminum alloy 7075-T6 ASTM B211
   Note: Aluminum alloy 2024-T4 shall have an anodic coating.

3. Hardware shall match or be equal to the following vendors:

- *For Double Bade Signs Assembly and Attachment to Square Posts:*
  3/8 inch Aluminum shell/steel pin drive rivet with nylon washer 7/8 inch outside diameter, 3/8 inch inside diameter and 1/16 inch thick.

  1/4 inch aluminum cherry mate rivet #34, 1 7/8 inch to 2 1/8 inch grip range with pvc spacer 5/8 inch outside diameter and ½ inch inside diameter.

- *For Square Posts to Square Post Anchors and Anchoring to Concrete:*
  3/8 inch Aluminum shell/steel pin drive rivet .
  5/16 inch medium corner bolt for 2 ¼ inch square anchor with 5/16 inch flanged nut.
  5/16 inch x 3 inches long galvanized bolt with (2) two galvanized hex nuts.

- *Miscellaneous Parts for use on existing extruded blade signs or single flat blade where required:*
  3/8” Nylon washers

5/16 inch x 18 Aluminum Vandal proof bolts
5/16 inch Aluminum breakaway nuts
5/16 inch x 18 2-1/2 inches long Aluminum carriage bolts
12 inch cross for extruded sign blades
12 inch cap 180 degrees for extruded sign blades
12 inch cap 90 degrees for extruded sign blades
5/16-18 course zinc coated nut zinc
5/16 inch x-18 1inch long hex bolt part number

E. Sign Placement Location

1. Sign locations depend on the edge of road condition. Generally, signs shall be a minimum 2' (feet) from face of a vertical curb, 4' (feet) from the front of slope face curb, and 6' (feet) from edge of pavement without curb. Signs shall not be located more than 12' (feet) from any of these locations. See Detail TE6-02 figures 7.3 7.4, 7.5 and 7.6. STOP or YIELD signs are to be installed a minimum of 4' (feet) in advance of any marked or unmarked crosswalks.

2. Traffic control signs minimum mounting height from bottom of sign to top of curb, or edge of roadway if no curb exists, or sidewalk where sidewalk exists shall be 7'-0". Street name signs shall be installed 8'-6" from the ground to the bottom of the sign. Street name signs co-located with STOP signs shall be installed above the STOP sign; a 6" (inch) space shall be maintained between the STOP sign and a Street name sign that is parallel to the STOP sign face. All other signs should be mounted per MUTCD guidelines for **Urban Areas**. See Detail TE6-03 figures 7.7, 7.8, 7.9, 7.10, and Detail TE6-04 figures 7.11, 7.12, and 7.13.

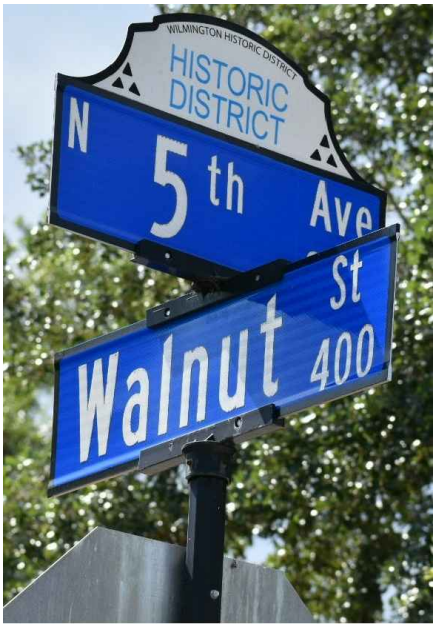

HISTORIC DISTRICT STREET NAME SIGN WITH TOPPER ON NEX POST
FIGURE 1.1

SPEED LIMIT AND AREA WIDE SIGN AT NEIGHBORHOOD ENTRANCE
FIGURE 1.2

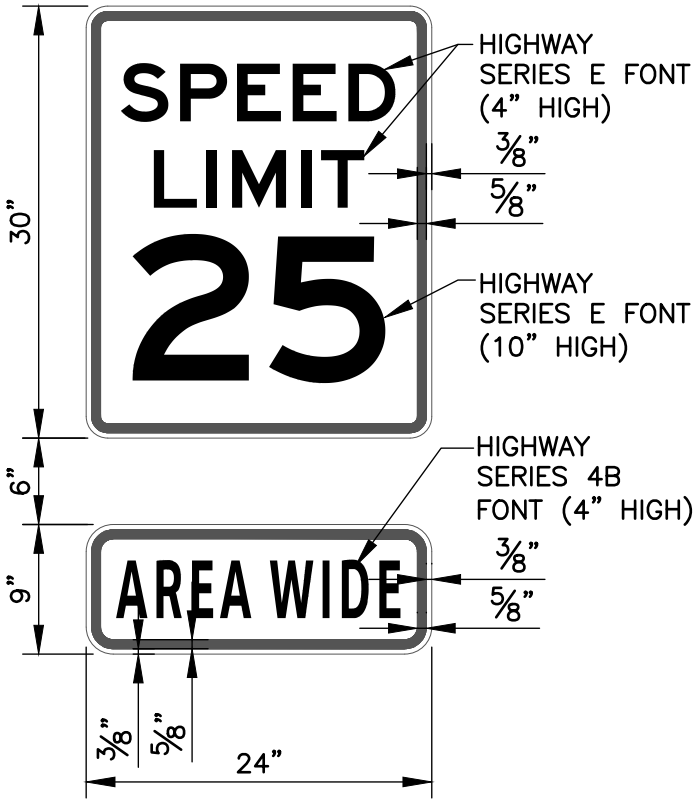

SPEED LIMIT AND AREA WIDE SIGN DETAIL
FIGURE 1.3

THESE TRAFFIC CONTROLS SIGNS FOR THE DRIVEWAY ARE IMPROPERLY INSTALLED. THEY SHOULD HAVE BEEN INSTALLED OUTSIDE OF THE PUBLIC RIGHT-OF-WAY NEXT TO THE PRIVATE DRIVEWAY. IMPROPER PLACEMENT OF SIGNS CAN BE CONFUSING TO THE DRIVER.

TRAFFIC CONTROL SIGN FOR A PRIVATE DRIVEWAY INSTALLED IN THE PUBLIC RIGHT-OF-WAY
FIGURE 1.4

DATE:	SEPTEMBER 29, 2014	General Street Name and Traffic Control Signage Information	CITY OF WILMINGTON TRAFFIC ENGINEERING
REVISED:	October 6, 2020		P.O. Box 1810 • Wilmington, NC 28402 • (910) 341-7888
DRAWN BY:	DALE THOMPSON		
CHECKED BY:	RANDALL GLAZIER		
SCALE:	NOT TO SCALE		DETAIL NO.: TE1-01

THESE ONE WAY SIGNS ARE IMPROPERLY INSTALLED IN THE PUBLIC RIGHT-OF-WAY. SIGNS FOR TO CONTROL TRAFFIC ENTERING PRIVATE DRIVEWAYS SHOULD BE INSTALLED OFF THE PUBLIC RIGHT-OF-WAY. THE PROPERTY OWNER/DEVELOPER IS RESPONSIBLE FOR MAINTENANCE OF THESE SIGN.

IMPROPERLY INSTALLED TRAFFIC CONTROL SIGNS FOR A PRIVATE DRIVEWAY INSTALLED IN THE PUBLIC RIGHT-OF-WAY

FIGURE 2.1

3" MINIMUM GAP BETWEEN SIGNS

STANDARD STREET NAME SIGNS INSTALLED ABOVE A STOP SIGN (BOTTOM SIGN PARALLEL TO STOP SIGN)

FIGURE 2.2

THESE SIGNS ARE USING THE LATEST MUTCD REQUIRED HIGH INTENSITY PRISMATIC SHEETING AND LETTERS.

STANDARD STREET NAME SIGNS INSTALLED ABOVE A YIELD OR STOP SIGN (BOTTOM SIGN PERPENDICULAR TO YIELD OR STOP SIGN)

FIGURE 2.3

DATE:	SEPTEMBER 29, 2014	General Street Name and Traffic Control Signage Information	CITY OF WILMINGTON TRAFFIC ENGINEERING
REVISED:	October 6, 2020		P.O. Box 1810 • Wilmington, NC 28402 • (910) 341-7888
DRAWN BY:	DALE THOMPSON		
CHECKED BY:	RANDALL GLAZIER		
SCALE:	NOT TO SCALE		DETAIL NO.: TE1-02

STREET NAME SIGN FOR A PRIVATE STREET
FIGURE 3.1

GREEN OR BLUE FILM IS ATTACHED TO SIGN BLANK SECOND. THIS FILM HAS THE LETTERS CUT OUT WHICH ALLOW THE WHITE FILM TO SHOW THRU. THIS GIVES THE LETTERS THE WHITE APPEARANCE.

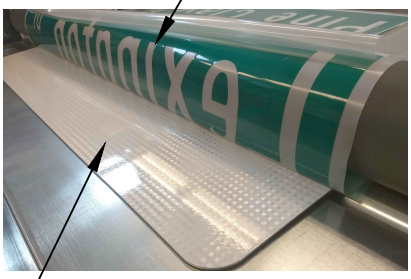

WHITE RETRO-REFLECTIVE FILM IS ATTACHED TO SIGN BLANK FIRST.

ASSEMBLY OF SIGN FILMS
FIGURE 3.3

STREET NAME SIGNS WITH DIRECTION ARROWS
FIGURE 3.2

DATE:	SEPTEMBER 29, 2014	General Street Name and Traffic Control Signage Information	CITY OF WILMINGTON TRAFFIC ENGINEERING
REVISED:	October 6, 2020		P.O. Box 1810 • Wilmington, NC 28402 • (910) 341-7888
DRAWN BY:	DALE THOMPSON		
CHECKED BY:	RANDALL GLAZIER		
SCALE:	NOT TO SCALE		DETAIL NO.: TE1-03

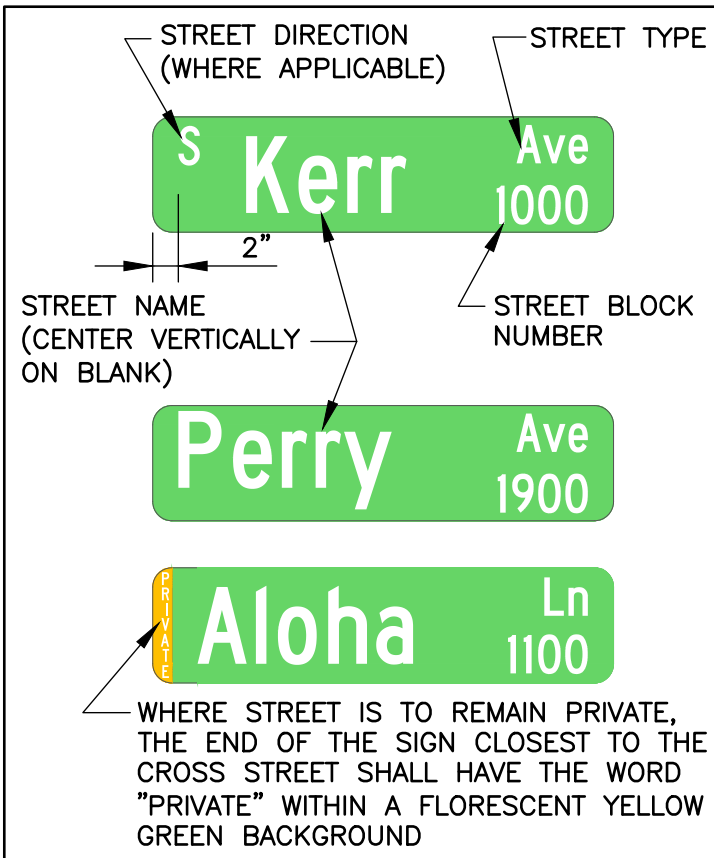

STREET BLOCK NUMBER IS THE BLOCK NUMBER OF THE CORNER WHERE THE SIGN IS LOCATED.

SIGN BLANKS ARE FLAT BLADE (ROUNDED CORNERS) FOR SQUARE POSTS, OR EXTRUDED BLADE FOR NEX POSTS.

STREET NAME SIGNS DETAILS
FIGURE 4.1

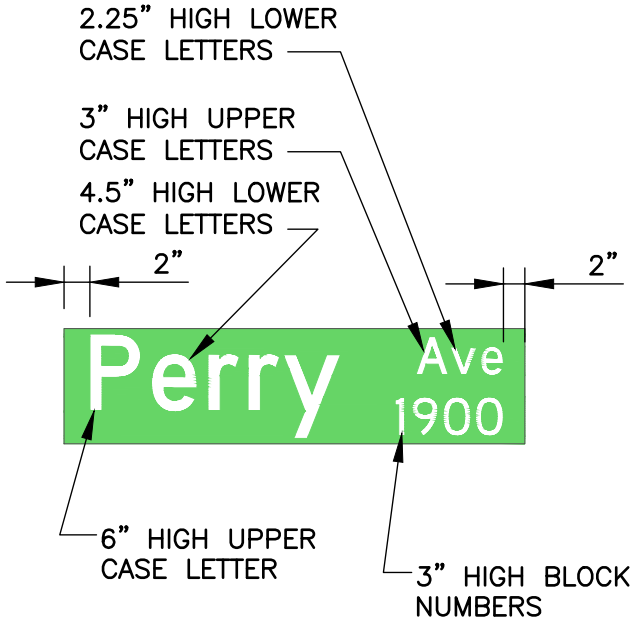

SIGN BLANKS ARE FLAT BLADE (ROUNDED CORNERS) FOR SQUARE POSTS, OR EXTRUDED BLADE FOR NEX POSTS.

GROUND MOUNTED STREET NAME SIGNS DETAILS
FIGURE 4.2

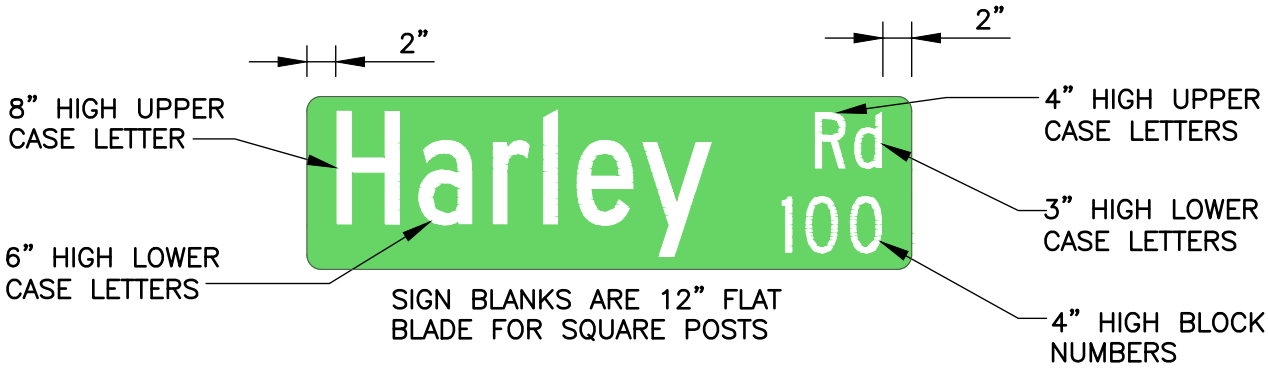

Use on Multi-Lane Roads where Speed Limit is greater than 40 mph.

GROUND MOUNTED STREET NAME SIGNS DETAILS
FIGURE 4.3

DATE:	SEPTEMBER 29, 2014	Ground Mounted Street Name Sign Design	CITY OF WILMINGTON TRAFFIC ENGINEERING
REVISED:	October 6, 2020		P.O. Box 1810 • Wilmington, NC 28402 • (910) 341-7888
DRAWN BY:	DALE THOMPSON		
CHECKED BY:	RANDALL GLAZIER		
SCALE:	NOT TO SCALE		DETAIL NO.: TE2-01

OVERHEAD STREET NAME SIGN
NO BORDER
DETAIL
FIGURE 4.5

Notes:

1. Sign blanks to be 18 inches in height with 1½" radius corners.

2. Lettering sizes shall be as follows:
   Street name: Upper–case letter is 12 inches high with Lower–case letters of 9 inches high.
   Street type and street direction: Upper–case letter of 6 inches high with Lower–case letter(s) of 3 inches high.
   Block number: 6 inches high numerals.
   Minimum Horizontal Distance from edge of sign to edge of letters: 2 inches to beginning of street name and 1 inches from the end where the block number is located.
   Minimum Vertical Distance from edge of sign to edge of letters: 1 inch.

3. Street Name is centered vertically.

4. Signs that are mounted to mast arms must not exceed the area of the sign that is shown on the approved Signal Plan mast arm plans.

DATE:	SEPTEMBER 29, 2014	Overhead Mounted Street Name Sign Design	CITY OF WILMINGTON TRAFFIC ENGINEERING
REVISED:	October 6, 2020		P.O. Box 1810 • Wilmington, NC 28402 • (910) 341-7888
DRAWN BY:	DALE THOMPSON		
CHECKED BY:	RANDALL GLAZIER		
SCALE:	NOT TO SCALE		DETAIL NO.: TE2-02

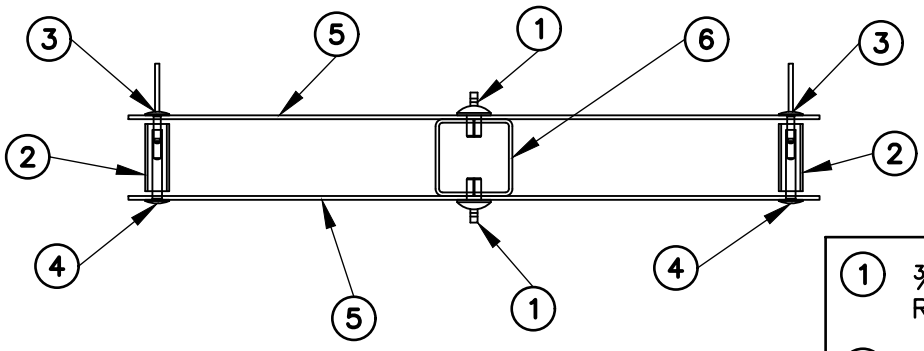

TOP VIEW

1. ⅜" Aluminum shell/steel pin Drive Rivet with nylon washer.
2. 1 ¾" x ½" PVC spacer. (Fits Cherry Mate rivet)
3. 2 Piece Cherry Mate Rivet – Blind Rivet: Aluminum ¼"ø body with 1 ⅞" to 2 ⅛" grip range.
4. 2 Piece Cherry Mate Rivet – Tubular Component: Aluminum component for ¼" blind rivet
5. Sign blank: .080 flat anodized aluminum blade.
6. Post: 2"x2"x14ga. fully punched galvanized steel square post with 7⁄16" ø holes 1" on center.

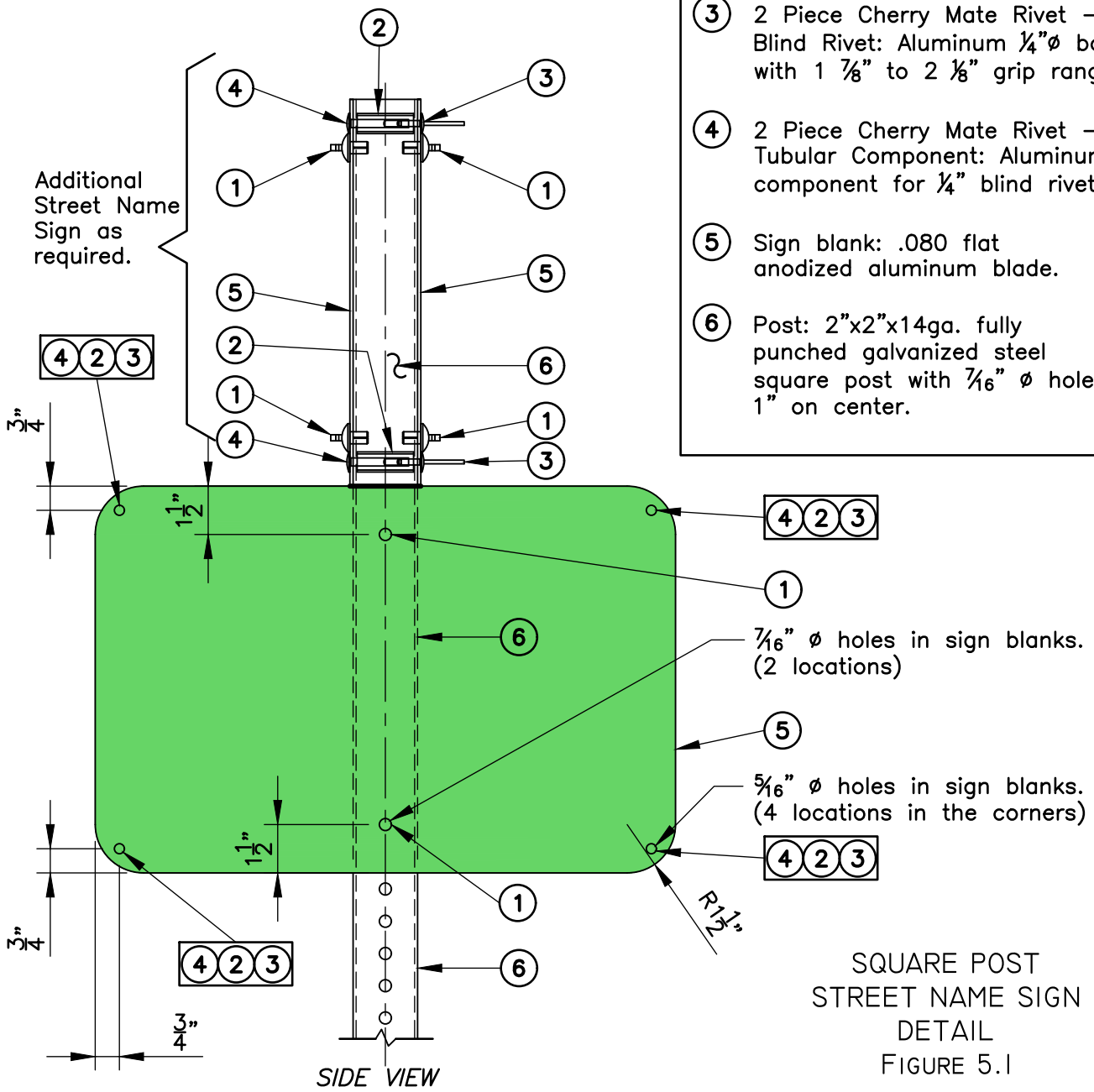

SQUARE POST
STREET NAME SIGN
DETAIL
FIGURE 5.1

DATE:	October 6, 2020	Square Post Street Name Sign Detail	CITY OF WILMINGTON TRAFFIC ENGINEERING
REVISED:	-		P.O. Box 1810 • Wilmington, NC 28402 • (910) 341-7888
DRAWN BY:	DALE THOMPSON		
CHECKED BY:	RANDALL GLAZIER		
SCALE:	NOT TO SCALE		DETAIL NO.: TE3-01

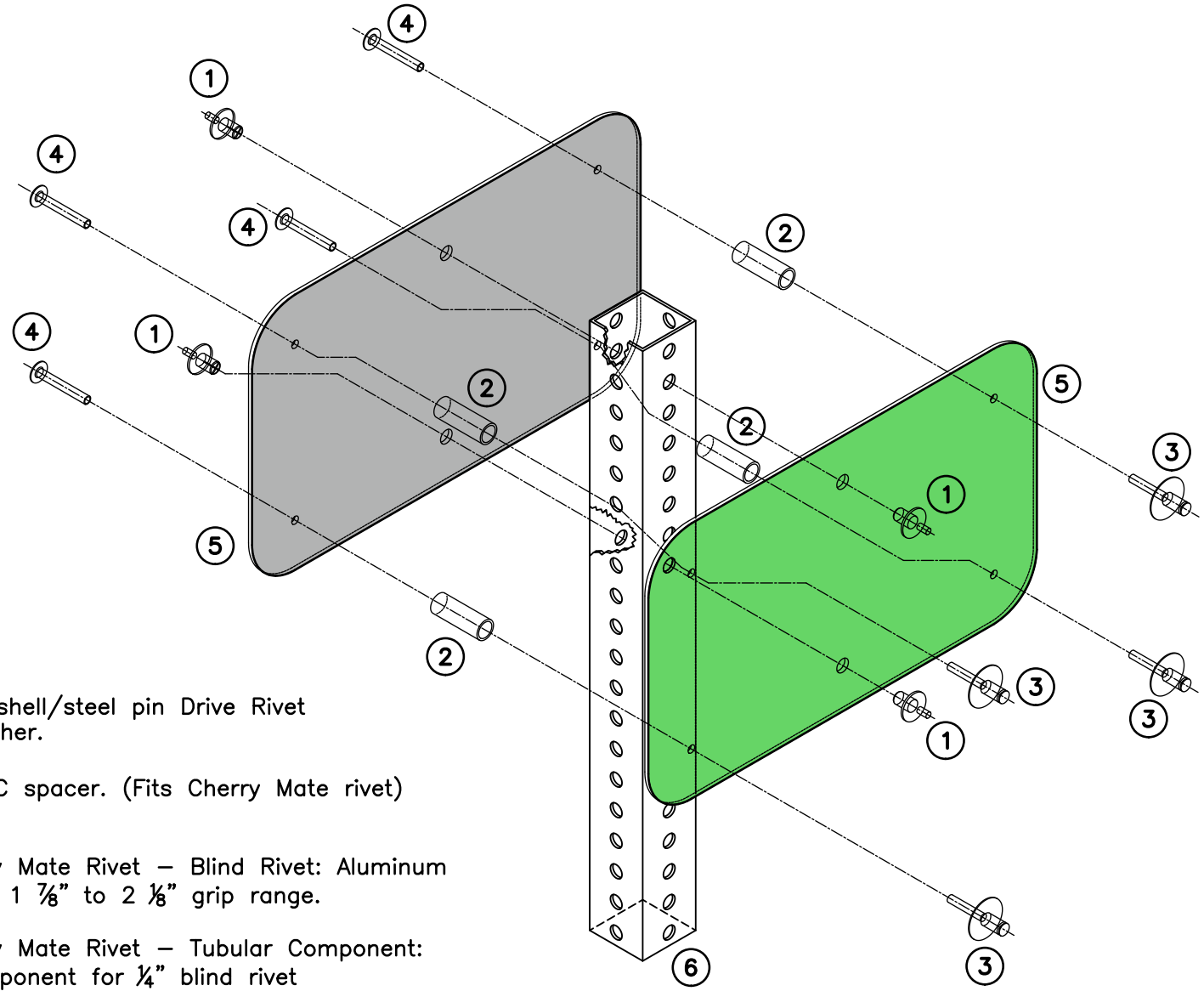

1. ⅜" Aluminum shell/steel pin Drive Rivet with nylon washer.
2. 1 ¾" x ½" PVC spacer. (Fits Cherry Mate rivet)
3. 2 Piece Cherry Mate Rivet – Blind Rivet: Aluminum ¼"ø body with 1 ⅞" to 2 ⅛" grip range.
4. 2 Piece Cherry Mate Rivet – Tubular Component: Aluminum component for ¼" blind rivet
5. Sign blank: .080 flat anodized aluminum blade.
6. Post: 2"x2"x14ga. fully punched galvanized steel square post with 7⁄16" ø holes 1" on center.

STREET NAME SIGN
DETAIL
FIGURE 5.2

DATE:	October 6, 2020
REVISED:	-
DRAWN BY:	DALE THOMPSON
CHECKED BY:	RANDALL GLAZIER
SCALE:	NOT TO SCALE

Square Post
Street Name Sign
Exploded View

CITY OF WILMINGTON
TRAFFIC ENGINEERING
P.O. Box 1810 • Wilmington, NC 28402 • (910) 341-7888

DETAIL NO.: TE3-02

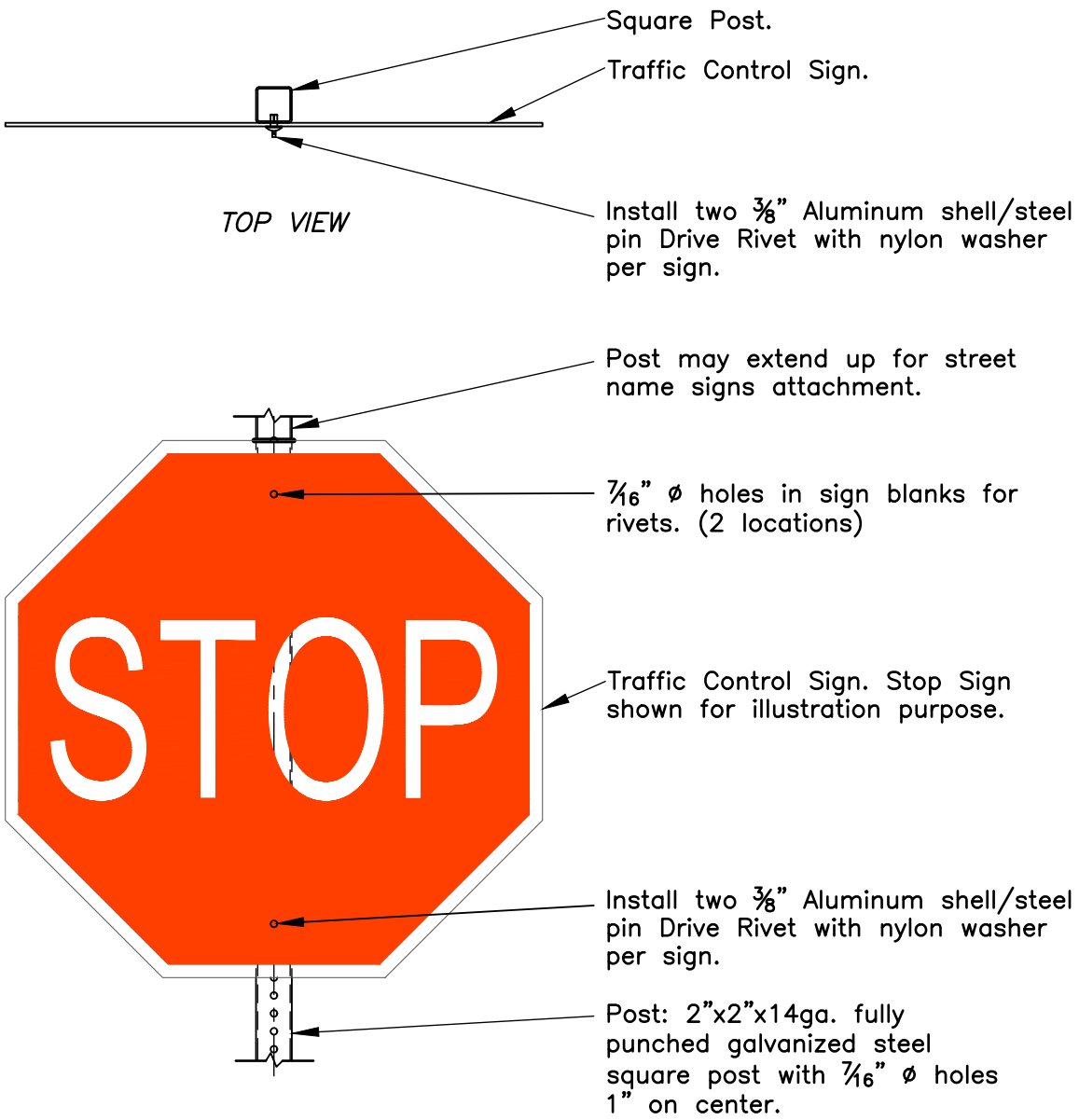

SQUARE POST
TRAFFIC CONTROL SIGN
ATTACHMENT
DETAIL
FIGURE 5.3

DATE:	SEPTEMBER 29, 2014	Square Post Traffic Control Signs Attachment	CITY OF WILMINGTON TRAFFIC ENGINEERING P.O. Box 1810 • Wilmington, NC 28402 • (910) 341-7888
REVISED:	October 6, 2020		
DRAWN BY:	DALE THOMPSON		
CHECKED BY:	RANDALL GLAZIER		
SCALE:	NOT TO SCALE		DETAIL NO.: TE3-03

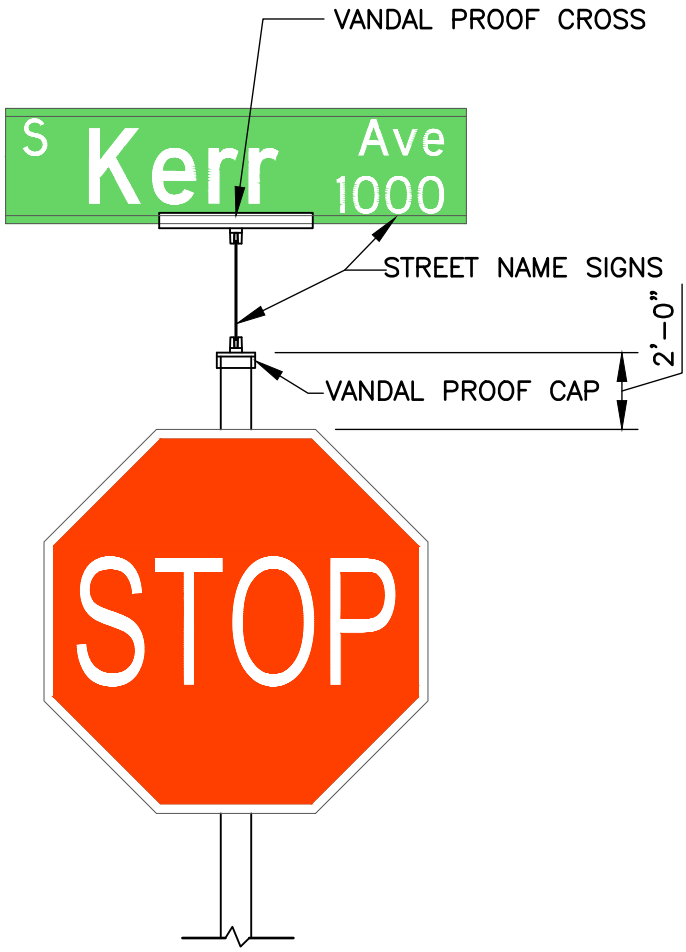

NEX POST STREET NAME SIGNS AND TRAFFIC CONTROL SIGNS MOUNTING DETAIL

FIGURE 6.1

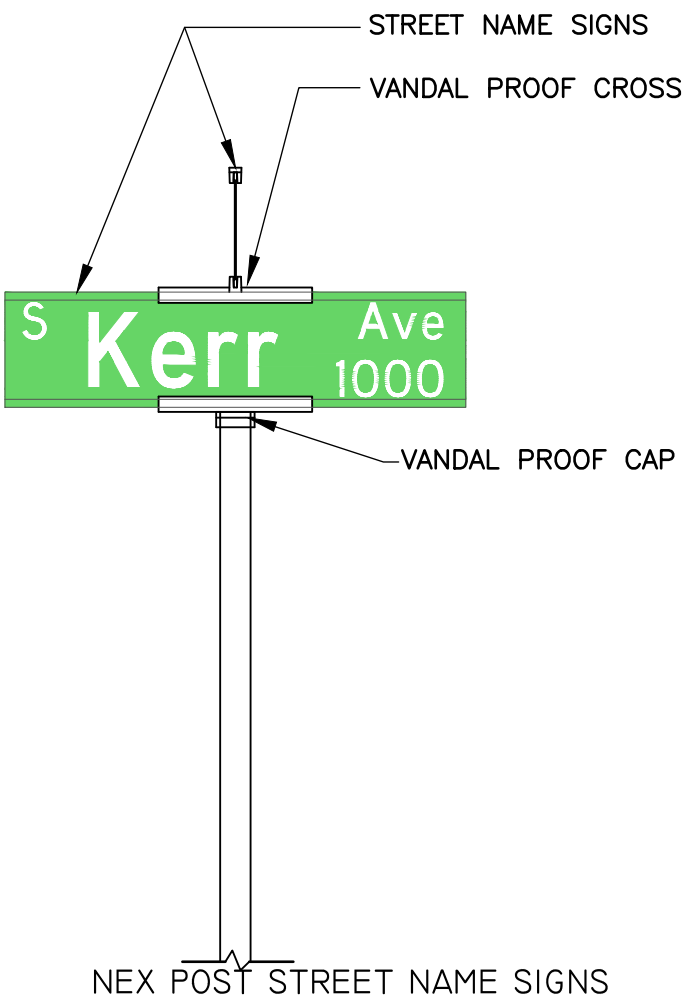

NEX POST STREET NAME SIGNS MOUNTING DETAIL

FIGURE 6.2

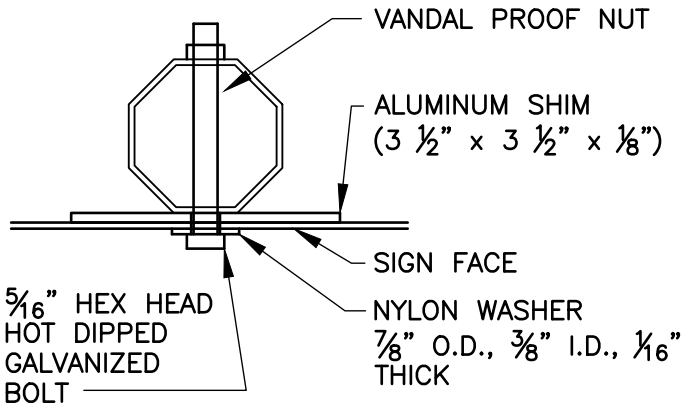

NEX POST MOUNTING DETAIL

FIGURE 6.3

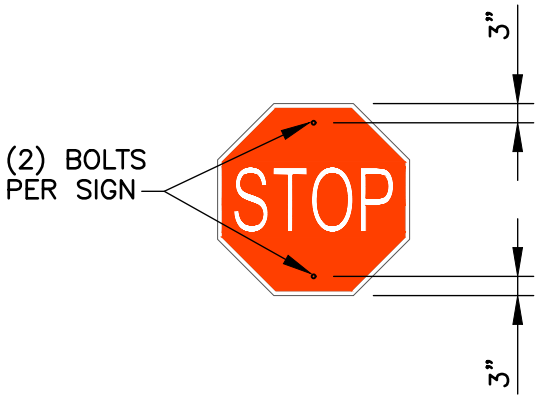

TYPICAL BOLTING LOCATION FOR TRAFFIC CONTROL SIGNS

FIGURE 6.4

DATE:	SEPTEMBER 29, 2014	NEX Post Street Name Sign and Traffic Control Signs Attachment
REVISED:	October 6, 2020	
DRAWN BY:	DALE THOMPSON	
CHECKED BY:	RANDALL GLAZIER	
SCALE:	NOT TO SCALE	

CITY OF WILMINGTON TRAFFIC ENGINEERING
P.O. Box 1810 • Wilmington, NC 28402 • (910) 341-7888

DETAIL NO.: TE4-01

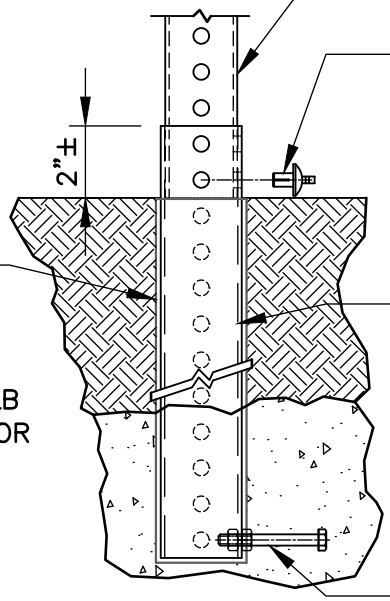

SQUARE TUBE POST INSTALLATION DETAIL
FIGURE 6.5

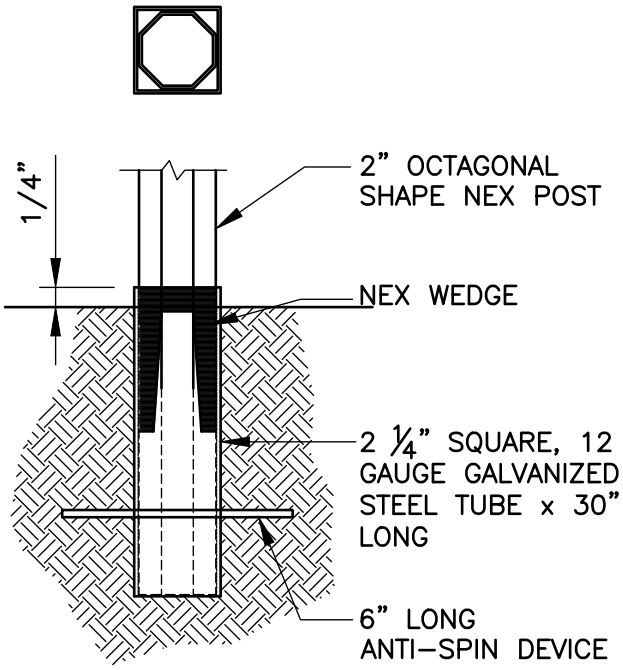

NEX POST INSTALLATION DETAILS
FIGURE 6.6

DATE:	SEPTEMBER 29, 2014	Square And NEX Posts Ground Installation Detail	CITY OF WILMINGTON TRAFFIC ENGINEERING
REVISED:	October 6, 2020		P.O. Box 1810 • Wilmington, NC 28402 • (910) 341-7888
DRAWN BY:	DALE THOMPSON		
CHECKED BY:	RANDALL GLAZIER		
SCALE:	NOT TO SCALE		DETAIL NO.: TE5-01

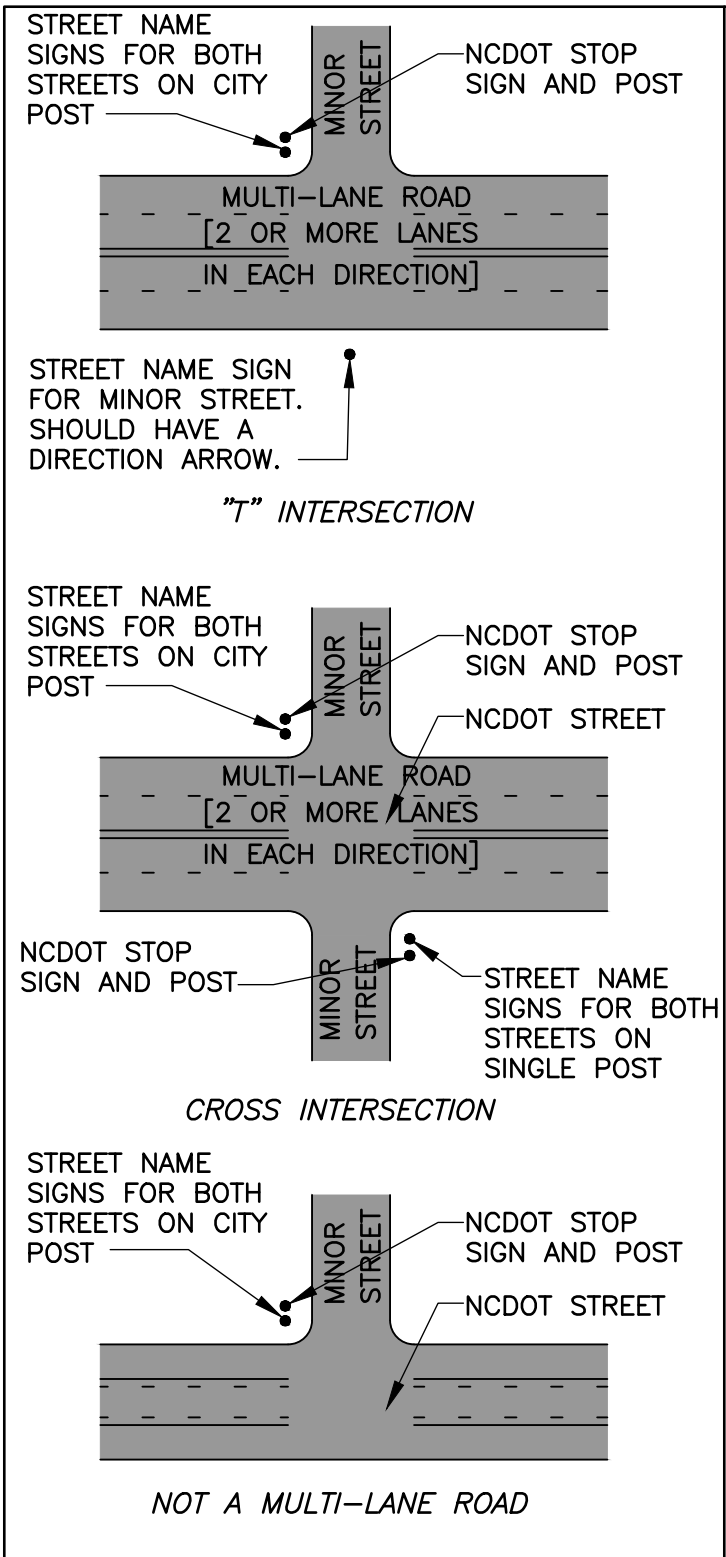

MULTI-LANE ROADS MAY OR MAY NOT HAVE MEDIANS

STREET NAME SIGNS FOR STREETS THAT INTERSECT *NCDOT* ROADS

FIGURE 7.1

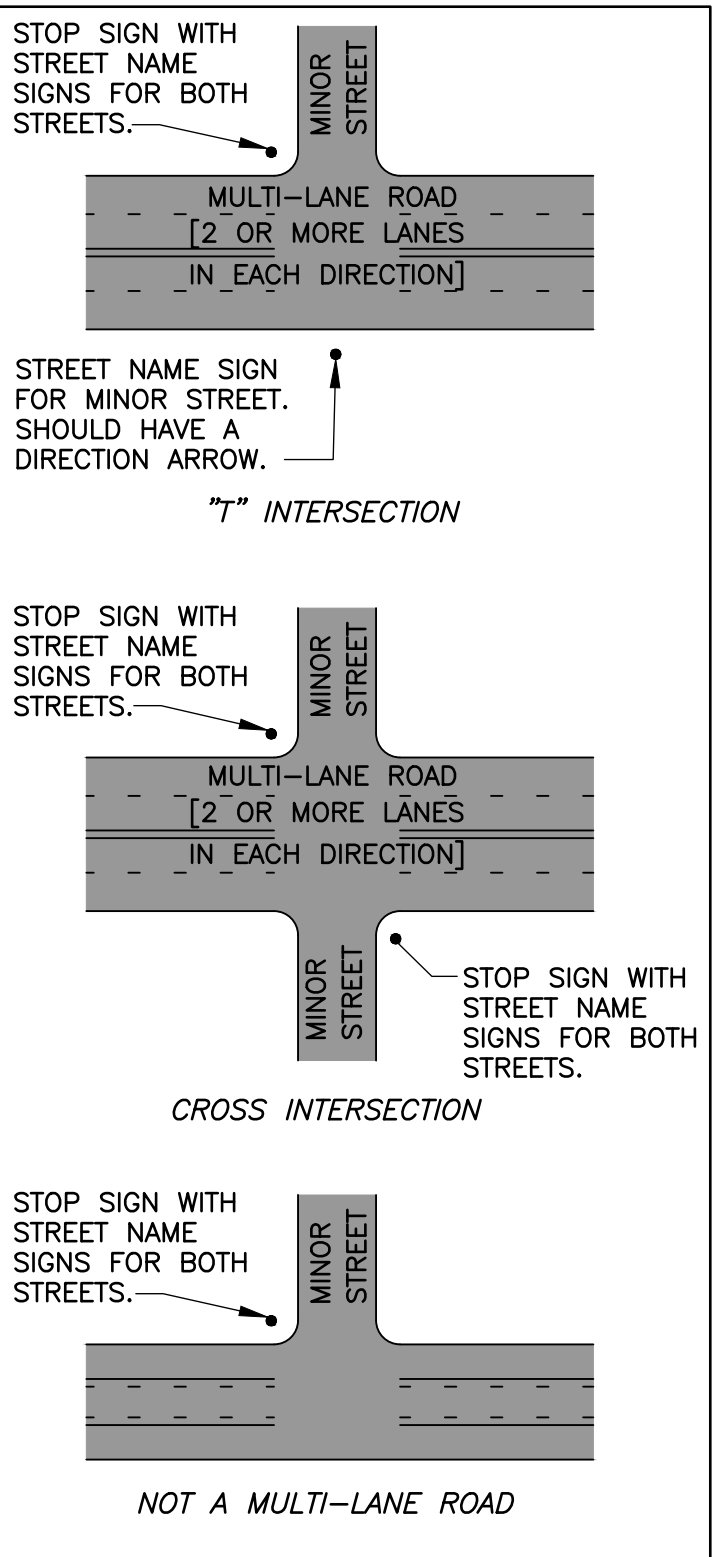

MULTI-LANE ROADS MAY OR MAY NOT HAVE MEDIANS

STREET NAME SIGNS FOR STREETS AT INTERSECTION OF *NON NCDOT* ROADS

FIGURE 7.2

DATE:	SEPTEMBER 29, 2014	Locations for Installation of Posts for Street Name Signs at Streets Intersections	CITY OF WILMINGTON TRAFFIC ENGINEERING P.O. Box 1810 • Wilmington, NC 28402 • (910) 341-7888
REVISED:	October 6, 2020		
DRAWN BY:	DALE THOMPSON		
CHECKED BY:	RANDALL GLAZIER		
SCALE:	NOT TO SCALE		DETAIL NO.: TE6-01

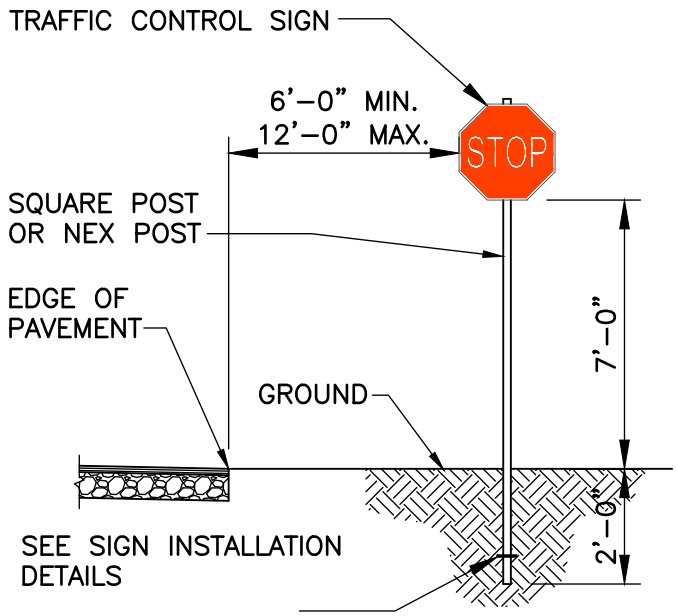

TRAFFIC CONTROL SIGN AT
EDGE OF PAVEMENT - NO
CURB
FIGURE 7.3

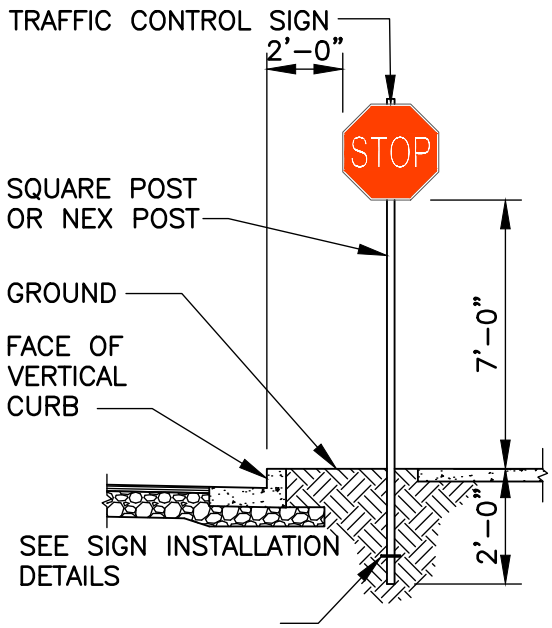

TRAFFIC CONTROL SIGN AT
VERTICAL CURB
FIGURE 7.4

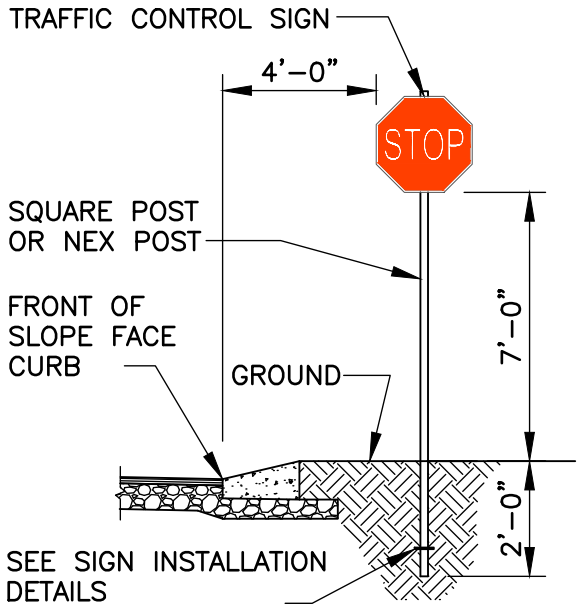

TRAFFIC CONTROL SIGN AT
SLOPE FACE CURB
FIGURE 7.5

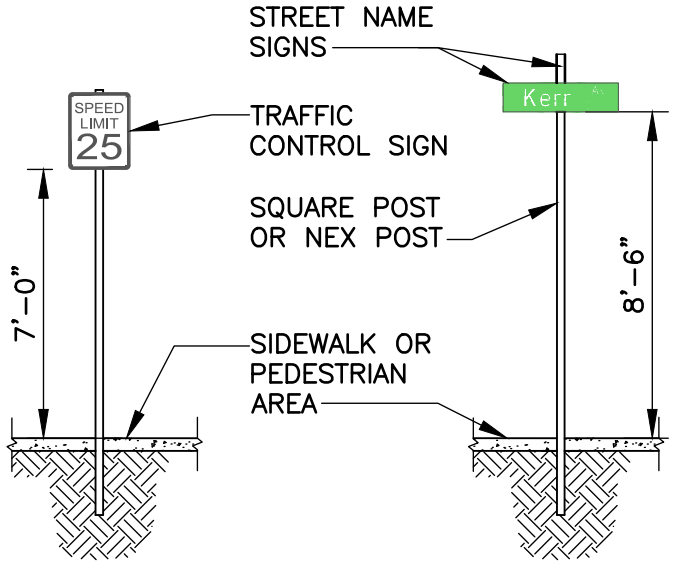

TRAFFIC CONTROL SIGN
OR STREET NAME SIGN AT
PEDESTRIAN AREA
FIGURE 7.6

DATE:	SEPTEMBER 29, 2014	Horizontal and Vertical Clearances for Installation of Signs and Sign Posts	CITY OF WILMINGTON TRAFFIC ENGINEERING
REVISED:	October 6, 2020		P.O. Box 1810 • Wilmington, NC 28402 • (910) 341-7888
DRAWN BY:	DALE THOMPSON		
CHECKED BY:	RANDALL GLAZIER		
SCALE:	NOT TO SCALE		DETAIL NO.: TE6-02

SEE SIGN ATTACHMENT DETAILS FOR DETAILED ATTACHMENT TO SQUARE POSTS AND NEX POSTS.

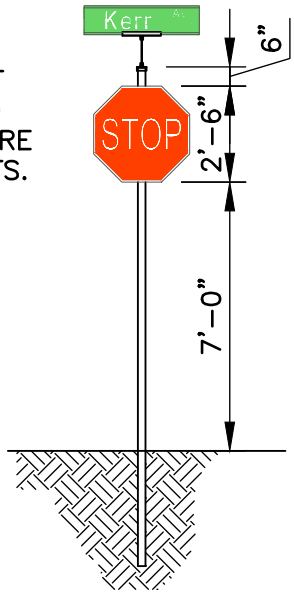

STREET NAME SIGN
INSTALLED ABOVE STOP SIGN
FIGURE 7.7
(YIELD SIGN IS SIMILAR)

SEE SIGN ATTACHMENT DETAILS FOR DETAILED ATTACHMENT TO SQUARE POSTS AND NEX POSTS.

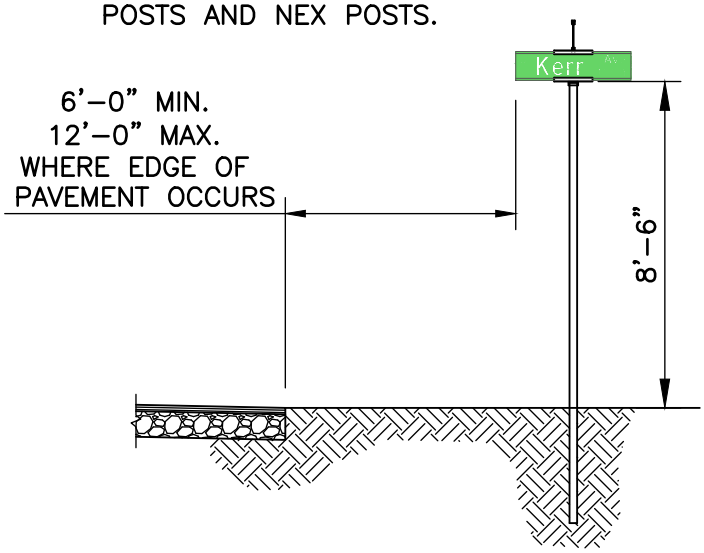

STREET NAME SIGN INSTALLED
WITHOUT STOP SIGN
AT EDGE OF PAVEMENT
FIGURE 7.8

SEE SIGN ATTACHMENT DETAILS FOR DETAILED ATTACHMENT TO SQUARE POSTS AND NEX POSTS.

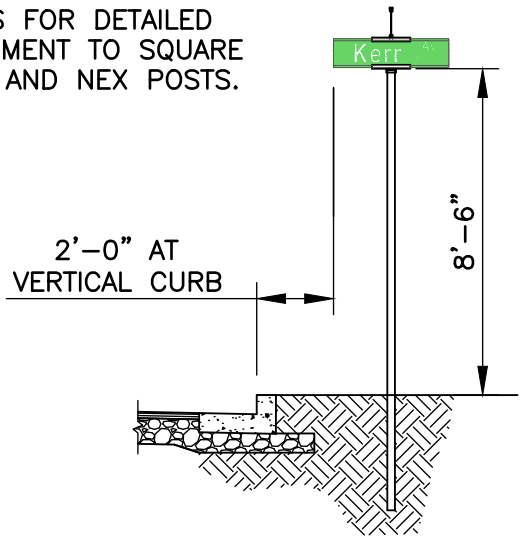

STREET NAME SIGN INSTALLED
WITHOUT STOP SIGN
AT VERTICAL CURB
FIGURE 7.9

SEE SIGN ATTACHMENT DETAILS FOR DETAILED ATTACHMENT TO SQUARE POSTS AND NEX POSTS.

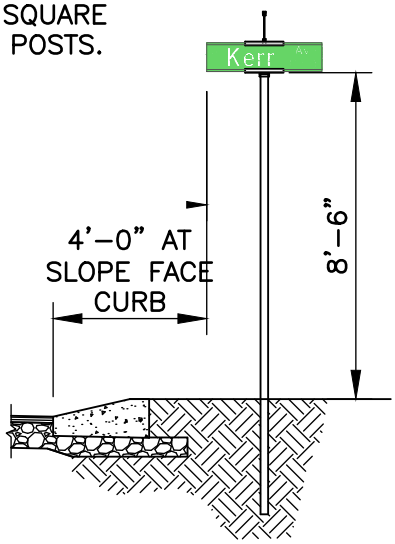

STREET NAME SIGN INSTALLED
WITHOUT STOP SIGN
AT SLOPE FACE CURB
FIGURE 7.10

DATE:	SEPTEMBER 29, 2014	Horizontal and Vertical Clearances for Installation of Signs and Sign Posts	CITY OF WILMINGTON TRAFFIC ENGINEERING
REVISED:	October 6, 2020		P.O. Box 1810 • Wilmington, NC 28402 • (910) 341-7888
DRAWN BY:	DALE THOMPSON		
CHECKED BY:	RANDALL GLAZIER		
SCALE:	NOT TO SCALE		DETAIL NO.: TE6-03

SEE SIGN ATTACHMENT DETAILS FOR DETAILED ATTACHMENT TO SQUARE POSTS AND NEX POSTS.

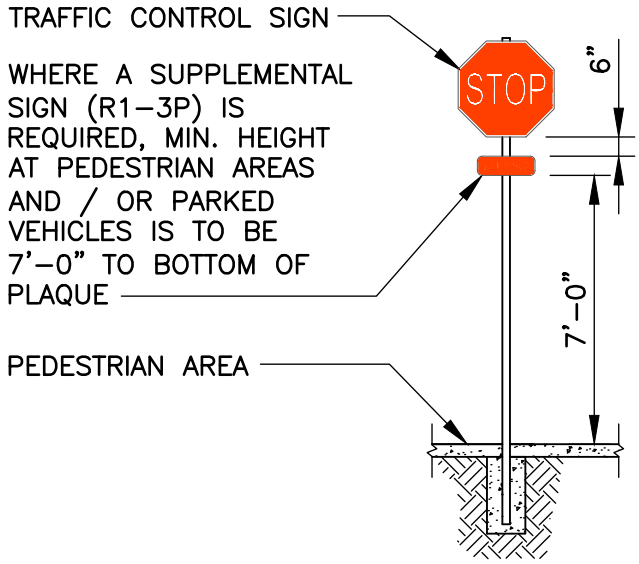

TRAFFIC CONTROL SIGN WITH SUPPLEMENTAL PLAQUE MOUNTING HEIGHT
FIGURE 7.11

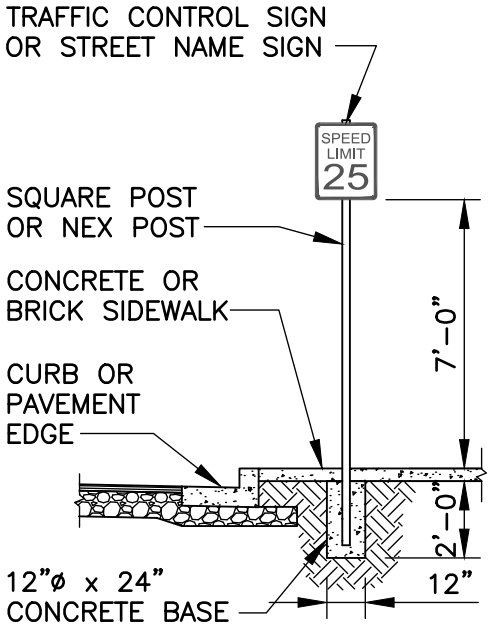

TRAFFIC CONTROL SIGN OR STREET NAME SIGN INSTALLED IN CONCRETE
FIGURE 7.12

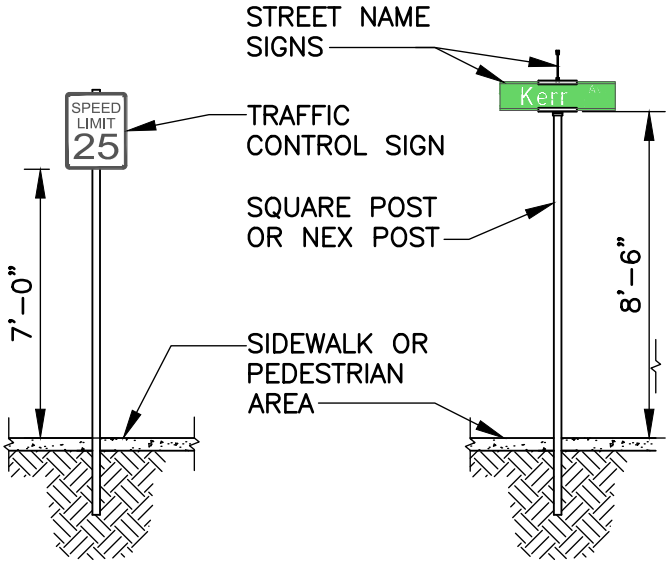

TRAFFIC CONTROL SIGN OR STREET NAME SIGN AT PEDESTRIAN AREA
FIGURE 7.13

DATE:	SEPTEMBER 29, 2014	Horizontal and Vertical Clearances for Installation of Signs and Sign Posts	CITY OF WILMINGTON TRAFFIC ENGINEERING
REVISED:	October 6, 2020		P.O. Box 1810 • Wilmington, NC 28402 • (910) 341-7888
DRAWN BY:	DALE THOMPSON		
CHECKED BY:	RANDALL GLAZIER		
SCALE:	NOT TO SCALE		DETAIL NO.: TE6-04

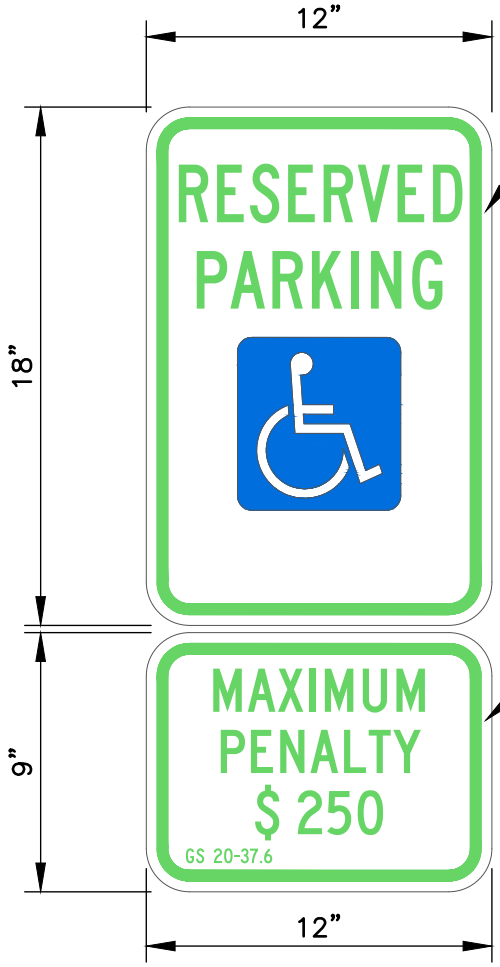

R7-8a SIGN
(NO ARROW(S))

NORTH CAROLINA
R7-8e SIGN, A
COMBINATION OF
THE R7-8a SIGN
AND THE NORTH
CAROLINA R7-8d
PENALTY SIGN

NORTH CAROLINA
PENALTY R7-8d
SIGN

EITHER THE COMBINATION OF
THE R7-8a AND R7-8d
SIGNS OR THE R7-8e SIGN
CAN BE USED.

R7-8a and R7-8d
Signage
Figure A1.1

R7-8e
Signage
Figure A1.2

WHERE VAN ACCESSIBLE PARKING IS
PROVIDED, THE VAN ACCESSIBLE (R7-8P)
SIGN SHALL BE MOUNTED BELOW THE OTHER
ACCESSIBLE PARKING SIGNS.
(2009 EDITION MUTCD SECTION 2B.47)

R7-8P
Signage
Figure A1.3

FOR DESIGN OF ACCESSIBLE SIGNS, SEE THE FOLLOWING:

- 2009 MUTCD OR LATEST EDITION.
- 2004 EDITION OF THE STANDARD HIGHWAY SIGNS AND THE 2012 SUPPLEMENT OR LATEST EDITION.
- NORTH CAROLINA 2009 SUPPLEMENT TO THE MANUAL OF UNIFORM TRAFFIC CONTROL DEVICES OR LATEST EDITION
- NCDOT DRAWING H-1_S FOR SIGNS SP00075, SP00076, AND SP00077.

DATE:	NOVEMBER 8, 2016	Accessible Parking Signs	CITY OF WILMINGTON TRAFFIC ENGINEERING
REVISED:	-		P.O. Box 1810 • Wilmington, NC 28402 • (910) 341-7888
DRAWN BY:	DALE THOMPSON		
CHECKED BY:	RANDALL GLAZIER		
SCALE:	NOT TO SCALE		DETAIL NO.: TE7-01

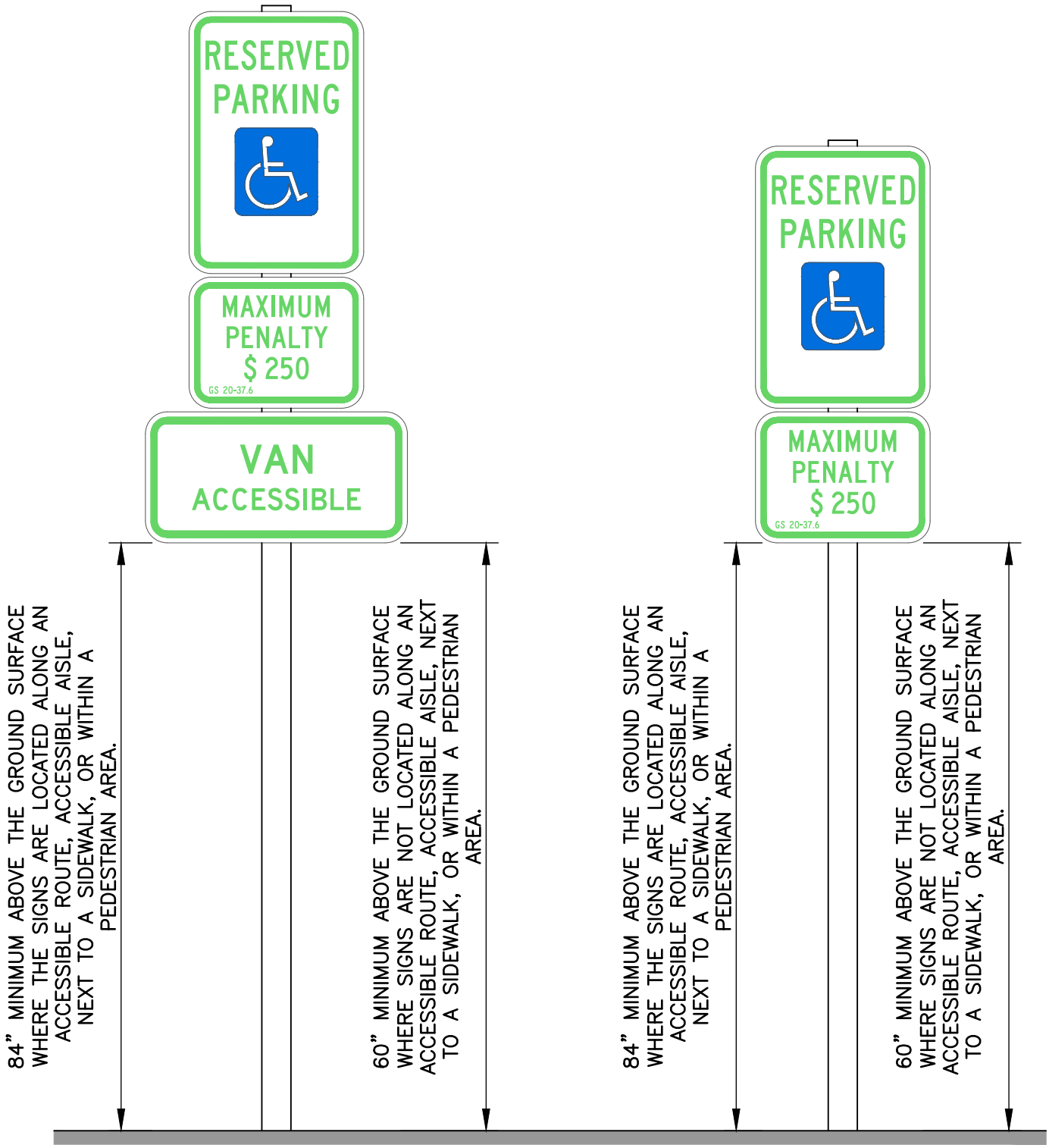

Signage Height
Figure A2.1

DATE:	NOVEMBER 8, 2016	Accessible Parking Signs Mounting Configuration and Mounting Heights	CITY OF WILMINGTON TRAFFIC ENGINEERING
REVISED:	-		P.O. Box 1810 • Wilmington, NC 28402 • (910) 341-7888
DRAWN BY:	DALE THOMPSON		
CHECKED BY:	RANDALL GLAZIER		
SCALE:	NOT TO SCALE		DETAIL NO.: TE7-02

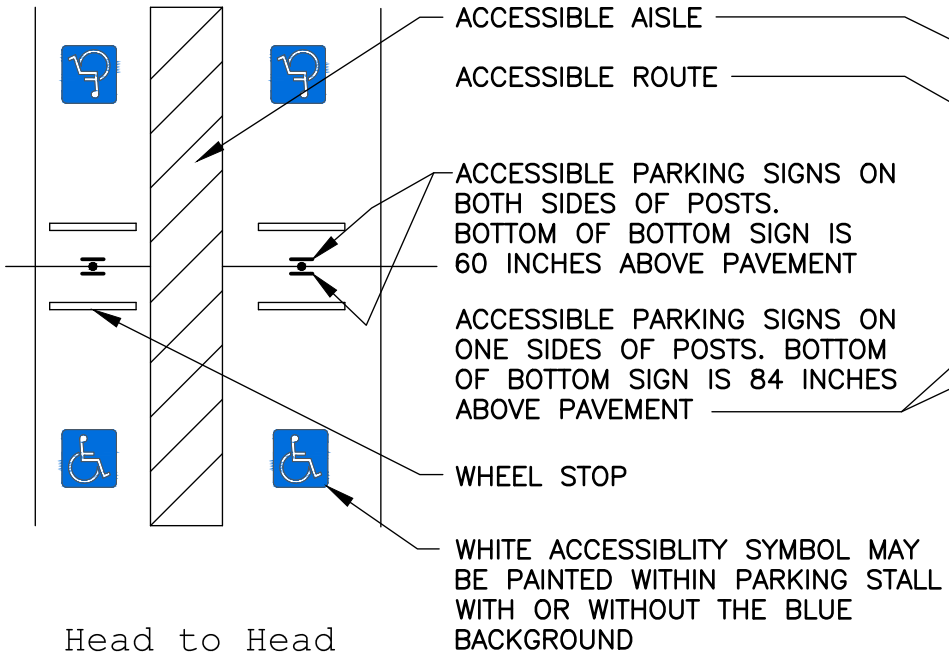

Head to Head Parking Spaces
Figure A3.1

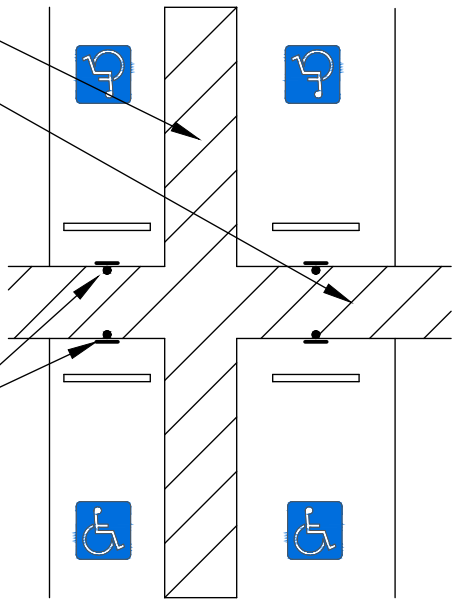

Accessible Route Between Head to Head Parking Spaces
Figure A3.2

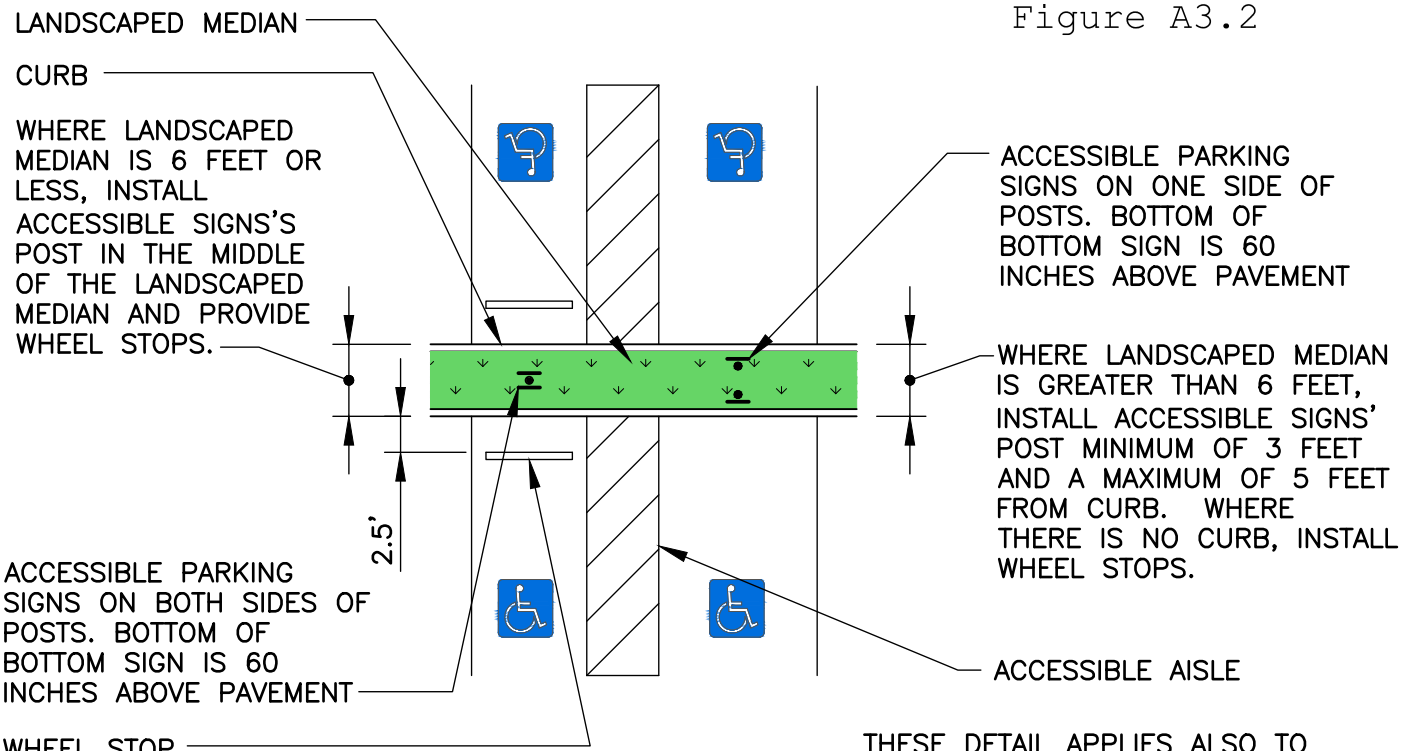

Landscaped Median Between Head to Head Parking Spaces
Figure A3.3

THESE DETAIL APPLIES ALSO TO PARKING THAT IS SIMILAR, BUT NOT HEAD TO HEAD. PARKING STALLS AND LAYOUT SHOWN IS FOR ILLUSTRATIVE PURPOSE ONLY. ACTUAL PARKING STALLS AND LAYOUT TO BE DETERMINED BY DESIGNER.

DATE:	NOVEMBER 8, 2016	Accessible Parking Signage Locations Sheet 1 of 3	CITY OF WILMINGTON TRAFFIC ENGINEERING
REVISED:	-		P.O. Box 1810 • Wilmington, NC 28402 • (910) 341-7888
DRAWN BY:	DALE THOMPSON		
CHECKED BY:	RANDALL GLAZIER		
SCALE:	NOT TO SCALE		DETAIL NO.: TE7-03

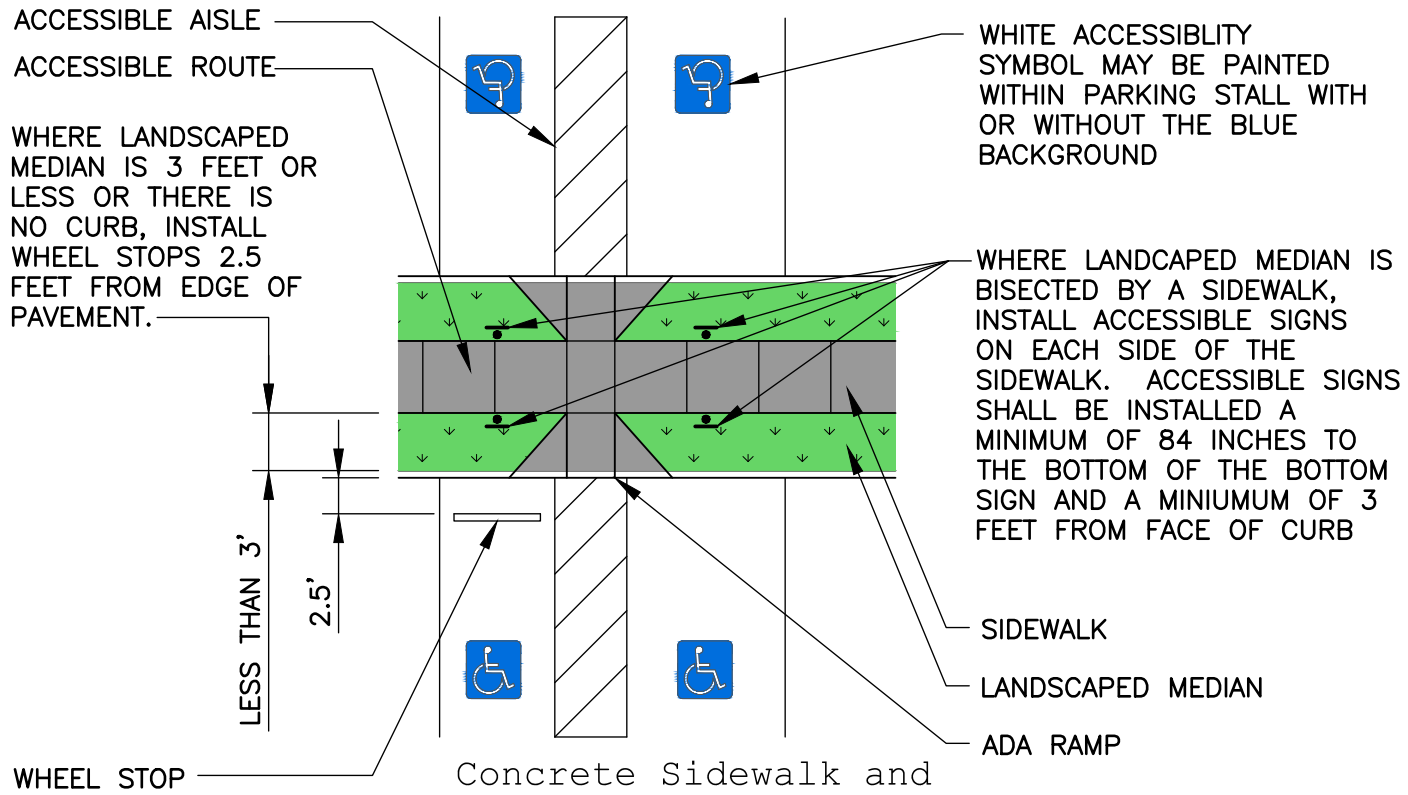

Concrete Sidewalk and Landscaped Median Between Head to Head Parking Spaces
Figure A4.1

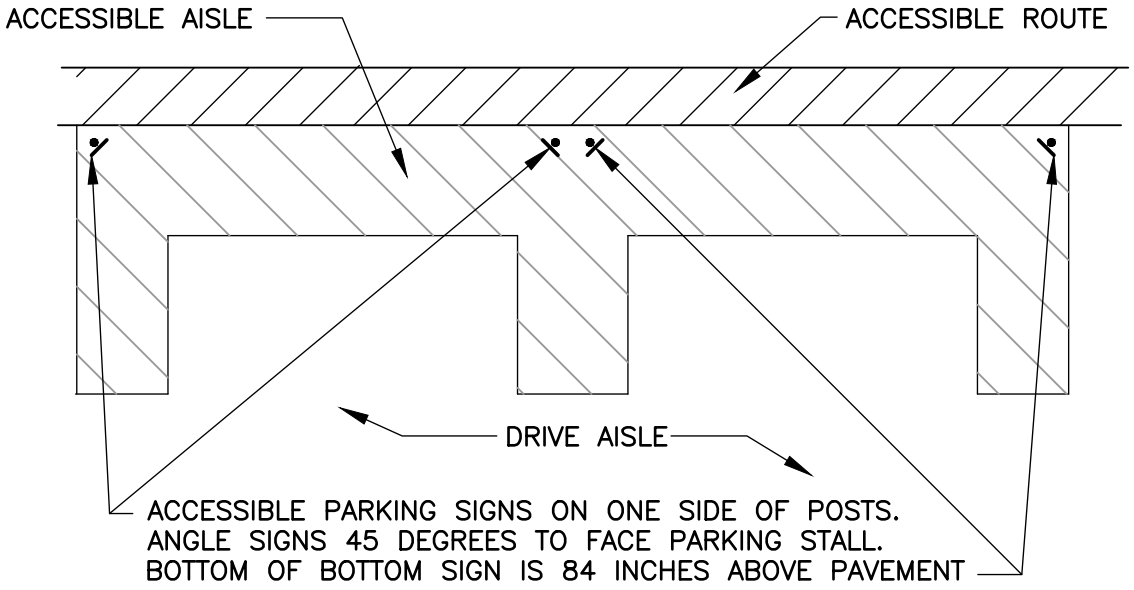

Parallel Parking Accessible Spaces
Figure A4.2

THESE DETAIL APPLIES ALSO TO PARKING THAT IS SIMILAR. PARKING STALLS AND LAYOUT SHOWN IS FOR ILLUSTRATIVE PURPOSE ONLY. ACTUAL PARKING STALLS AND LAYOUT TO BE DETERMINED BY DESIGNER.

DATE:	NOVEMBER 8, 2016	Accessible Parking Signage Locations Sheet 2 of 3	CITY OF WILMINGTON TRAFFIC ENGINEERING
REVISED:	-		P.O. Box 1810 • Wilmington, NC 28402 • (910) 341-7888
DRAWN BY:	DALE THOMPSON		
CHECKED BY:	RANDALL GLAZIER		
SCALE:	NOT TO SCALE		DETAIL NO.: TE7-04

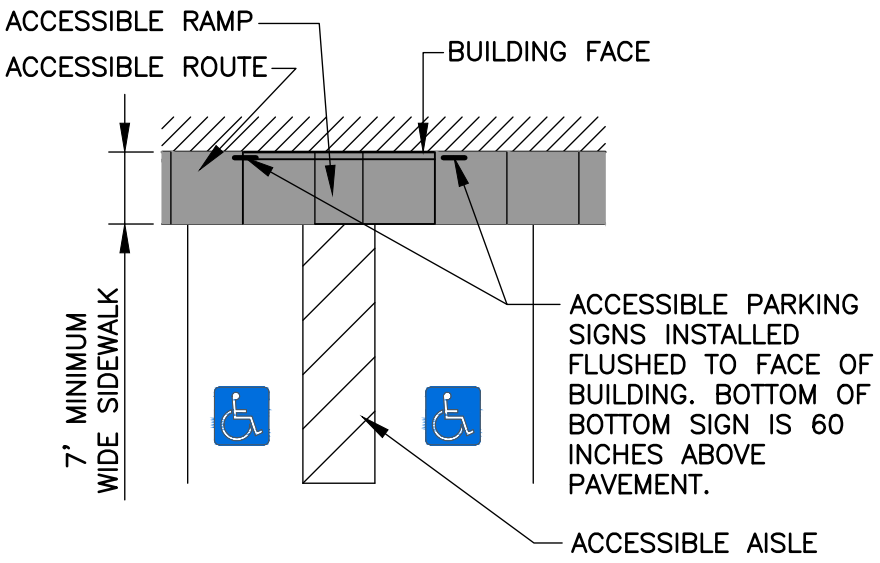

Concrete Sidewalk Between Building and Parking Spaces
Figure A5.1

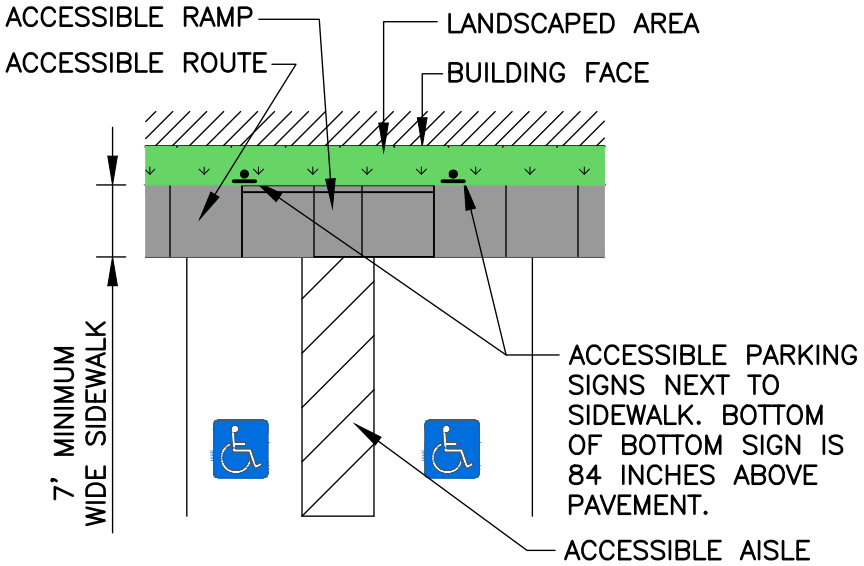

Concrete Sidewalk and Landscaping Between Building and Parking Spaces
Figure A5.2

THESE DETAILS APPLIES ALSO TO PARKING THAT IS SIMILAR. PARKING STALLS AND LAYOUT SHOWN IS FOR ILLUSTRATIVE PURPOSE ONLY. ACTUAL PARKING STALLS AND LAYOUT TO BE DETERMINED BY DESIGNER.

DATE:	NOVEMBER 8, 2016	Accessible Parking Signage Locations Sheet 3 of 3	CITY OF WILMINGTON TRAFFIC ENGINEERING
REVISED:	-		P.O. Box 1810 • Wilmington, NC 28402 • (910) 341-7888
DRAWN BY:	DALE THOMPSON		
CHECKED BY:	RANDALL GLAZIER		
SCALE:	NOT TO SCALE		DETAIL NO.: TE7-05

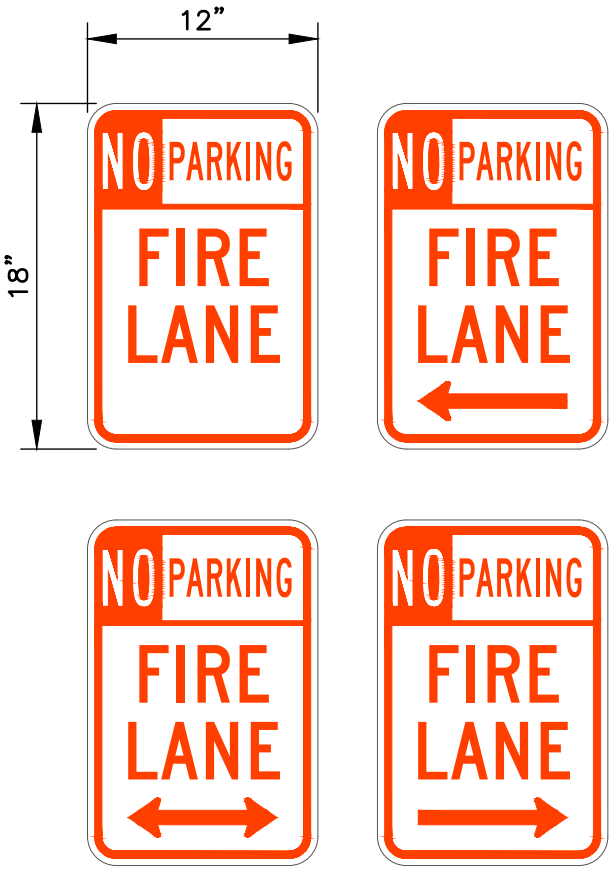

Fire Lane Signs
Figure 8.1

DATE:	NOVEMBER 8, 2016	Fire Lane Signage	CITY OF WILMINGTON TRAFFIC ENGINEERING
REVISED:	-		P.O. Box 1810 • Wilmington, NC 28402 • (910) 341-7888
DRAWN BY:	DALE THOMPSON		
CHECKED BY:	RANDALL GLAZIER		
SCALE:	NOT TO SCALE		DETAIL NO.: TE8-01

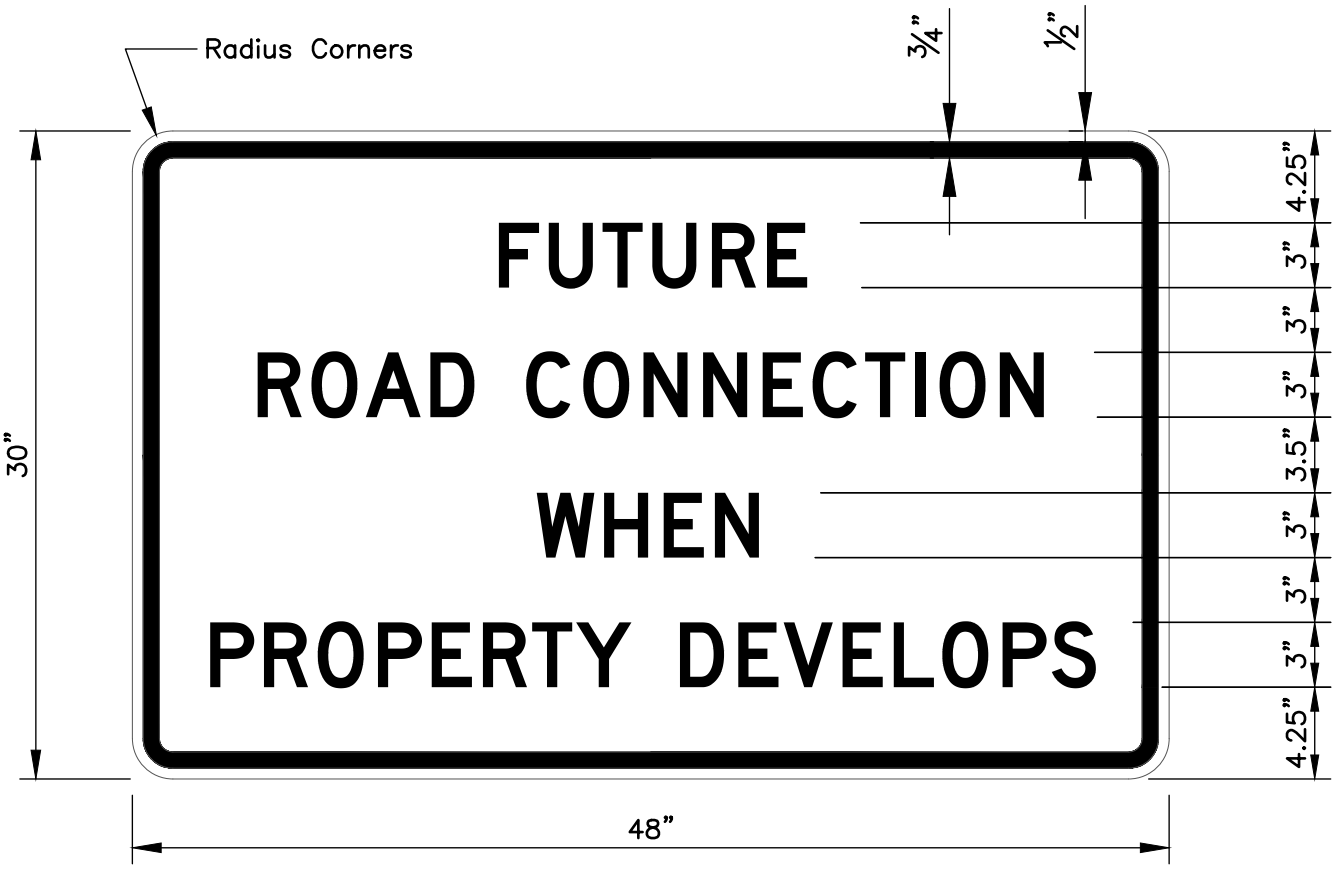

SIGN DETAIL

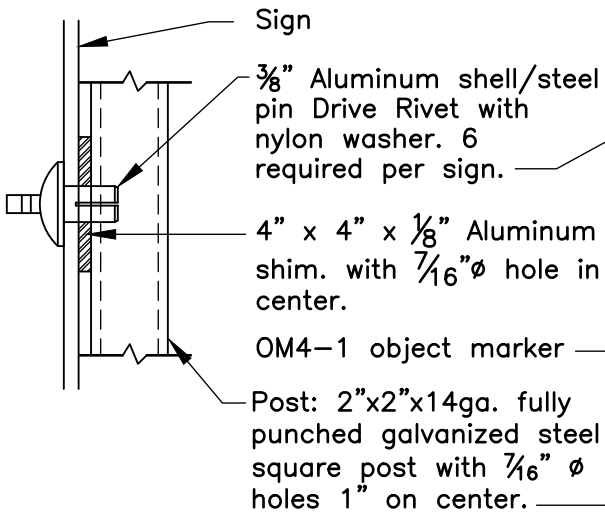

ENLARGED SIDE VIEW DETAIL

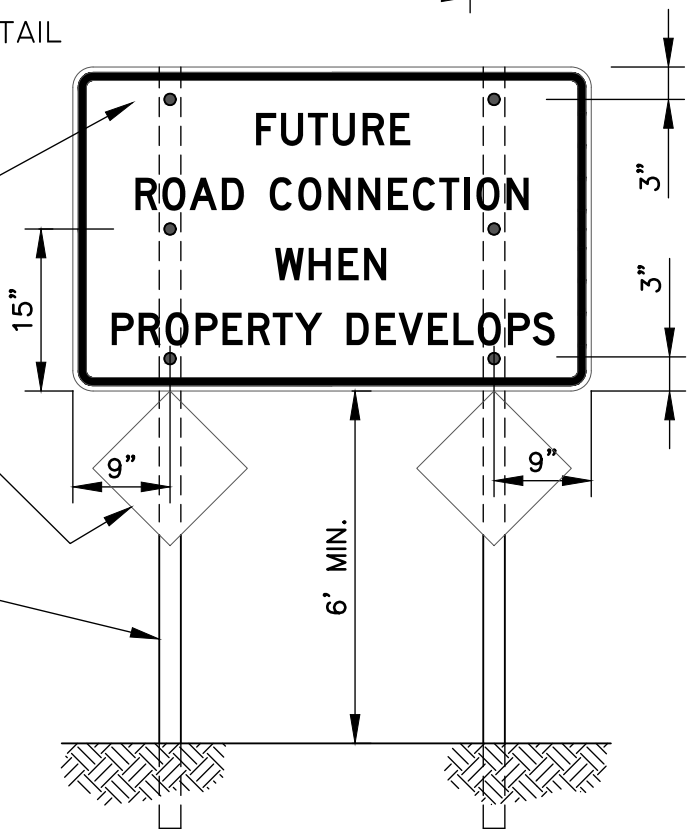

INSTALLATION DETAIL

NOTES:

1. Use 2014 series D fonts.
2. Legend and border shall be black.
3. Center Legend horizontally on sign blank.
4. Background shall be white High Intensity Prismatic reflective sheeting type IV or better.
5. Install posts into ground per detail TE5-01 Figure 6.5.

DATE:	October 6, 2020	Installation and Sign Details for Future Road Connection When Property Develops Sign	CITY OF WILMINGTON TRAFFIC ENGINEERING P.O. Box 1810 • Wilmington, NC 28402 • (910) 341-7888
REVISED:	-		
DRAWN BY:	DALE THOMPSON		
CHECKED BY:	RANDALL GLAZIER		
SCALE:	NOT TO SCALE		DETAIL NO.: TE8-02